Sensitivity Models and Uncertainty Analysis

Bernie Lesieutre

University of Wisconsin - Madison

Dept. of Electrical & Computer Engineering

BPA, March 22, 2013

Sensitivity Models

We rely on models to analyze the grid under various conditions - actual and anticipatory.

Sensitivity models relate features of model-based analyses, to model properties. This is useful for

- Understanding the model components
- Tuning and improving models based on observations
- Estimating the range of possible outcomes, i.e., map model uncertainties to responses.

Model Tuning

We've calculated sensitivity models to help

- Estimate load model parameters,
  - System wide simulations
  - Load models for FIDVR studies
- Estimate power plant parameters from PMU measurements

Sensitivities for Model Tuning

Example of using PMU data to fit observations

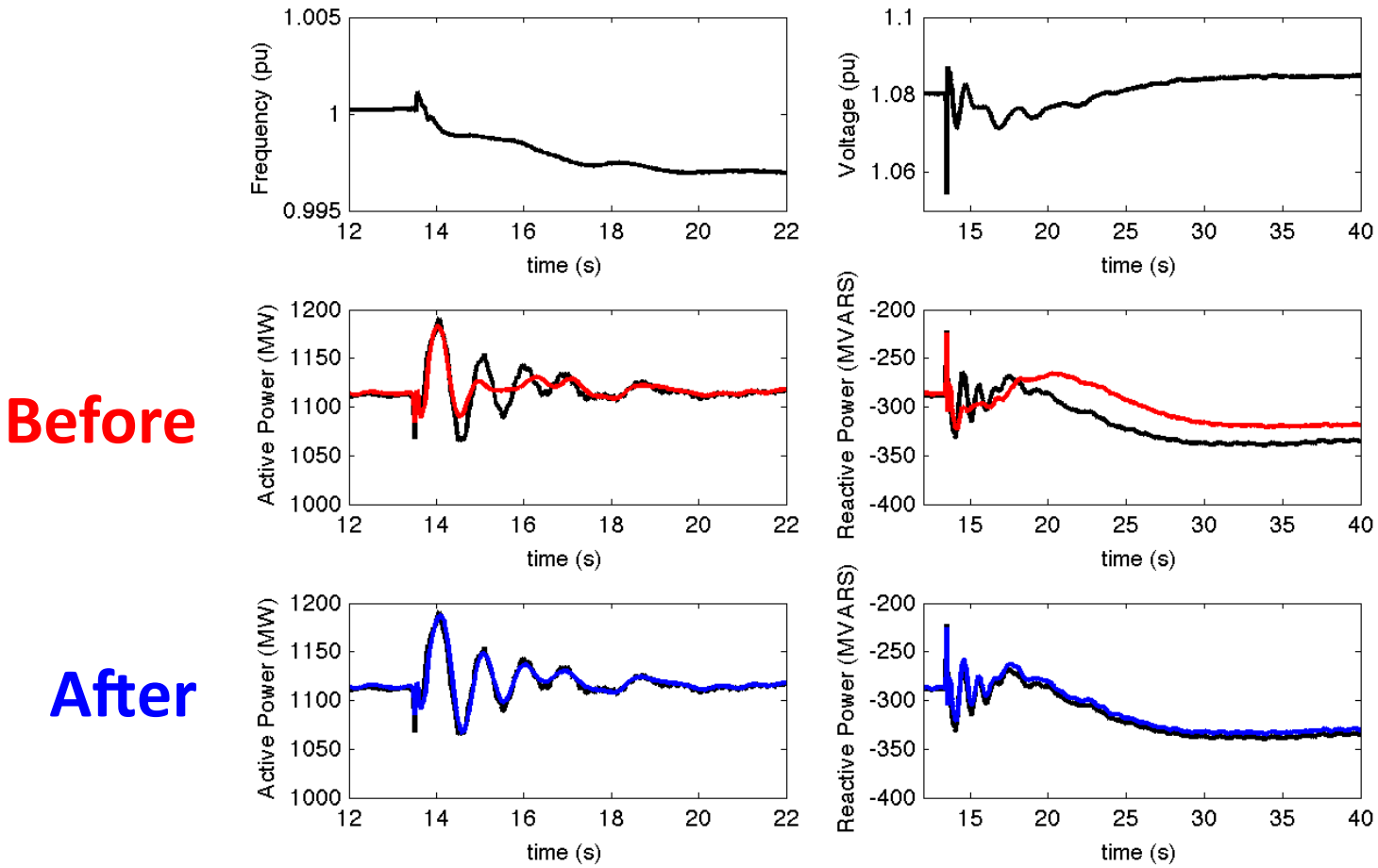

Sensitivities for Model Tuning

Example of some parameter adjustments

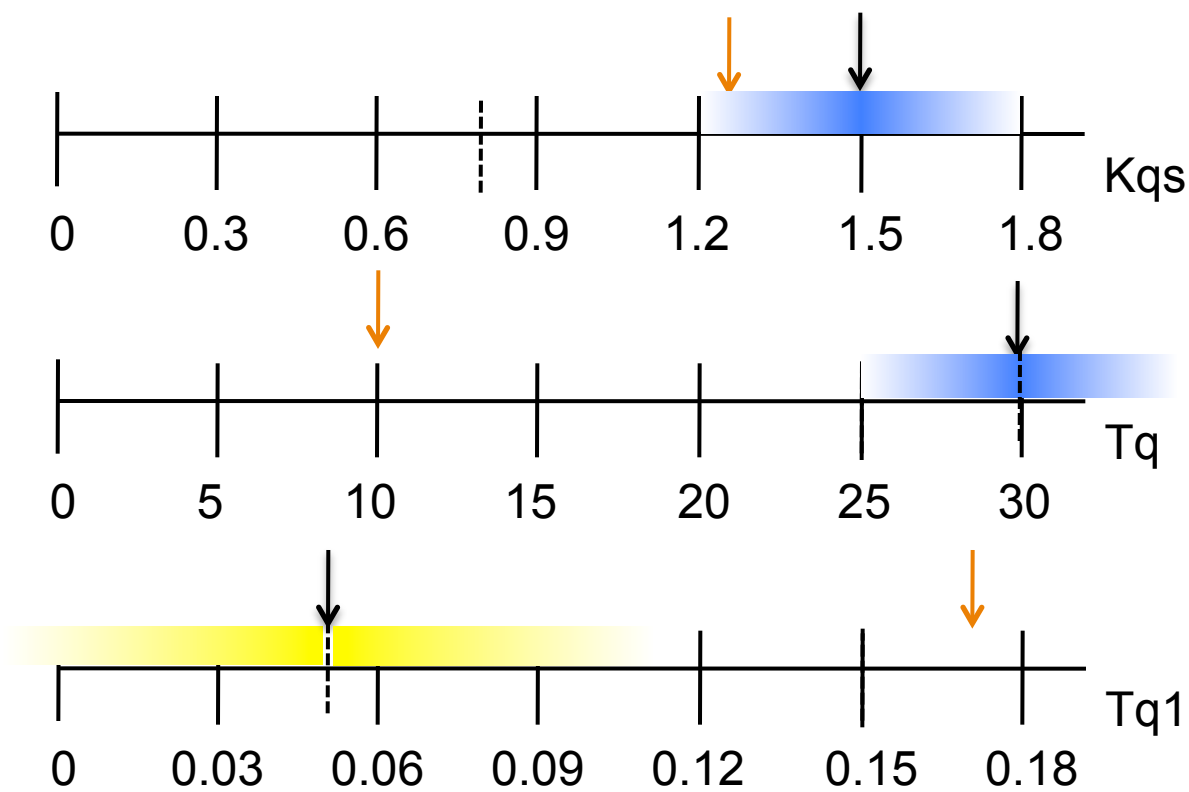

Sensitivities for Anticipatory Studies

Trajectory Sensitivities: error bars on simulations

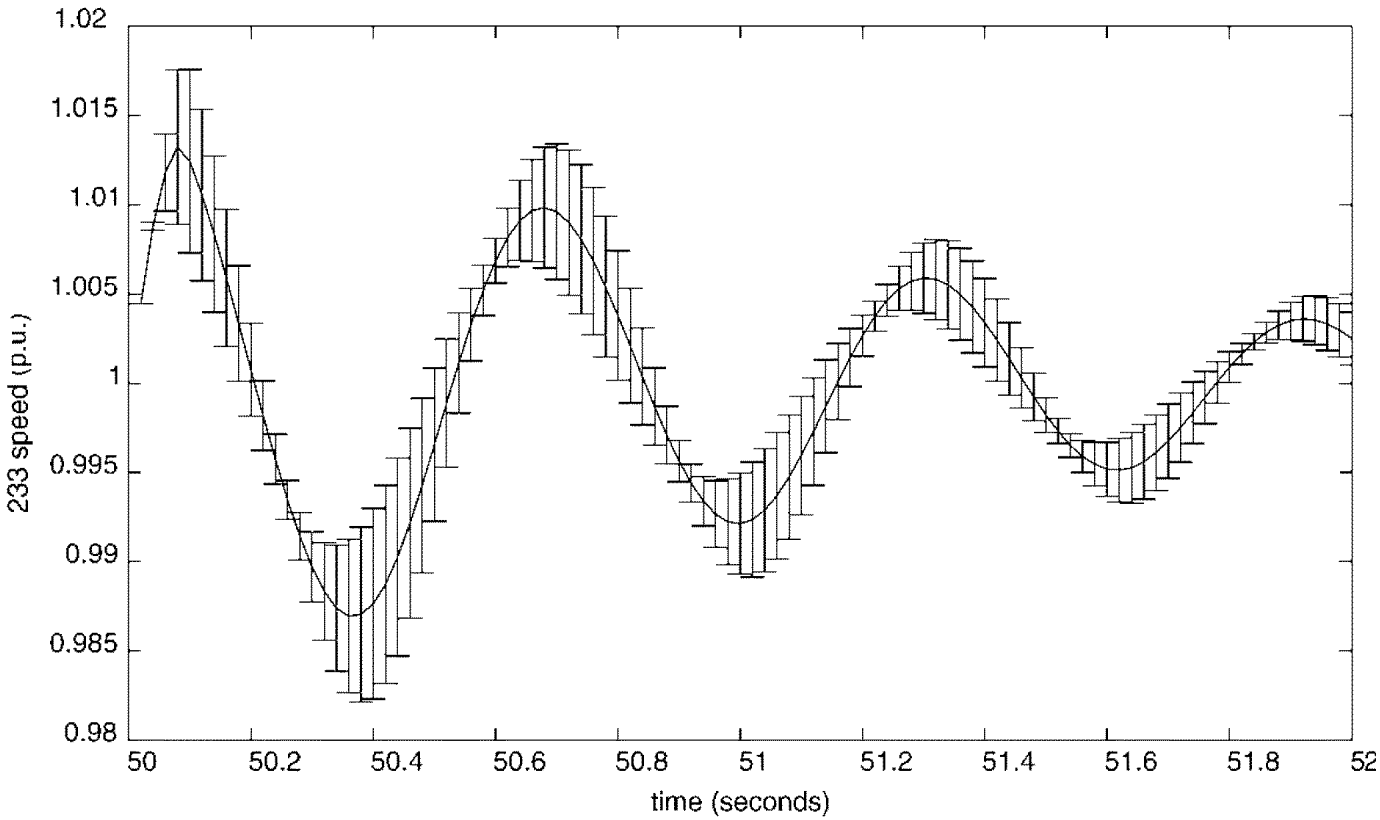

Extreme sensitivities are also an indicator of nearing instability.

Sensitivities for Anticipatory Studies

Feature Sensitivities: Eg. How does the load composition affect system **damping**?

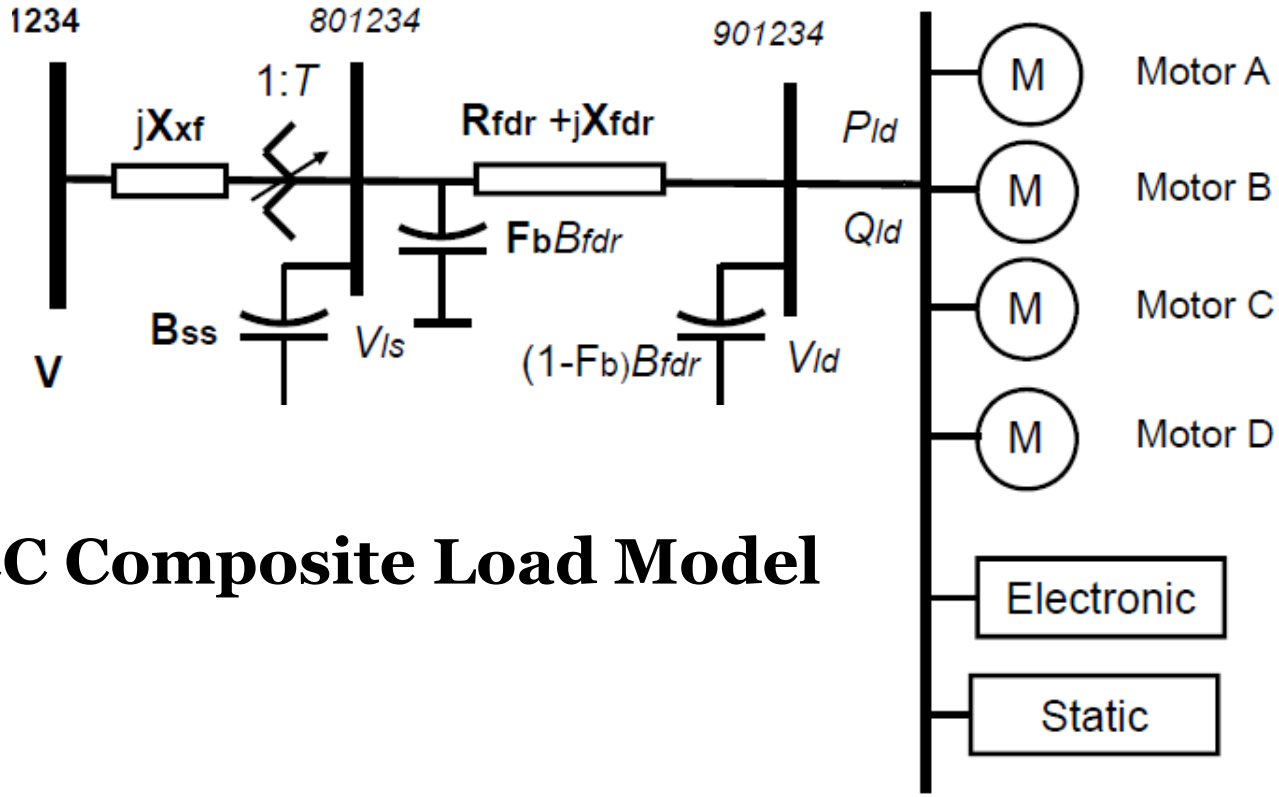

WECC Composite Load Model

Limits of Sensitivity Models

Hidden Failures

What if:

- The models are wrong
  - A component stops working correctly (eg. PSS)
  - Inadequate models for new components.

What if:

- Backup systems fail
  - Do we model relay misoperation?
  - Do we model RAS misoperation?

And, difficult to include in technical models

- Do we model human factors?
- Do we model interactions with other infrastructures?

Sensitivity Models and Uncertainty Analysis

With

- Appropriate models
- Characterization of Uncertainties

Sensitivity Models

- Can be useful for planning
- Detecting possible instabilities