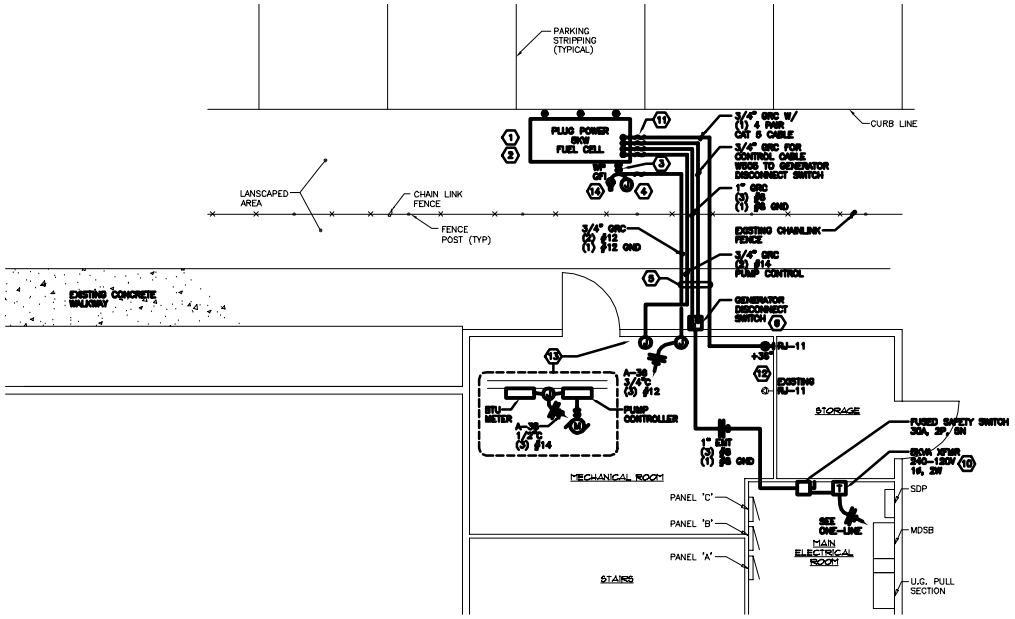

PARTIAL SITE PLAN
SCALE 1/4"=1'-0"

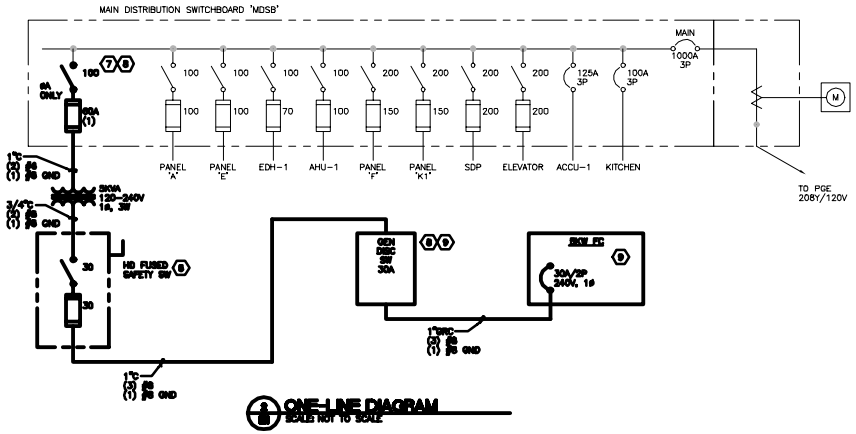

ONE-LINE DIAGRAM
SCALE NOT TO SCALE

SHEET NOTES

1. PROVIDE LABOR AND MATERIALS TO INSTALL OWNER FURNISHED 5KW, 120/240 VOLT, PLUG POWER FUEL CELL. MATERIAL PROVIDED INCLUDES FUEL CELL, GENERATOR DISCONNECT SWITCH AND WIRE, 25 FOOT LONG CONTROL CABLE.
2. UNIT INSTALLATION IS FOR A 12 MONTH DEMONSTRATION PERIOD. HARKINS HOUSE AND FUEL CELL INSTALLATION SITE ARE WASHINGTON COUNTY OWNED AND MAINTAINED PROPERTIES.
3. PROVIDE SINGLE POLE 20 AMP RATED SWITCH IN WEATHERPROOF CAST BOX TO DISCONNECT POWER TO MAINTENANCE RECEPTACLE AND HEAT TRACE JUNCTION BOX.
4. CONNECT HEAT TRACE CABLE PROVIDED AND INSTALLED BY MECHANICAL TO GFI PROTECTED 120 VAC FROM 20 AMP MAINTENANCE GFI RECEPTACLE.
5. RUN GRC CONDUIT RUNS ON-GRADE TO EXTERIOR BUILDING WALL. COORDINATE WITH MECHANICAL PIPING TO UTILIZE COMMON, COMPACT ROUTE. MECHANICAL PROTECTION BY OTHERS.
6. PROVIDE ENGRAVED NAMEPLATE "GENERATOR DISCONNECT SWITCH", ADJUST LOCATION AS REQUIRED TO COORDINATE WITH MECHANICAL PIPING AND GAS METERS.
7. CONNECT FUEL CELL OUTPUT TO EXISTING 100A/3P FUSED SWITCH.
8. PROVIDE WARNING LABELS PER NEC 692.17 TO INDICATE LINE AND LOAD ENERGIZED HAZARD.
9. FUEL CELL AND GENERATOR DISCONNECT SWITCH PROVIDED BY OWNER.
10. WALL HANG TRANSFORMER.
11. PROVIDE 12" TO 18" LENGTH OF SEAL-TIGHT, METAL CORE FLEXIBLE CONDUIT AT FINAL CONNECTION TO FUEL CELL.
12. RUN 4 PAIR CAT. 5 CABLE BETWEEN BTU METER AND SOUTH WALL FOR RS232 CONNECTION TO SITE COMPUTER. TERMINATION BY OTHERS.
13. MOUNT EQUIPMENT ON EXISTING WALL AS SPACE ALLOWS. COORDINATE WITH MECHANICAL.
14. PROVIDE GFI PROTECTED 20 AMP DUPLEX RECEPTACLE WITH WEATHERPROOF IN-USE COVER FOR CONDENSATE PUMP AND MAINTENANCE.

GENERAL NOTES

A. ELECTRICAL CONTRACTOR TO INCLUDE ALL PERMITS AND PLAN CHECK FEES IN BID.

B. ALL WORK TO BE INSTALLED PER 2002 NEC WITH OREGON AMENDMENTS.

C. ALL CONDUCTOR TO BE THHN INSULATED STRANDED COPPER.

D. ALL EXTERIOR CONDUIT TO BE GRC, INTERIOR CONDUIT EMT.

E. PROVIDE NAMEPLATES AND LABELS FOR ALL ELECTRICAL COMPONENTS.

F. INCLUDE ONE YEAR WARRANTY ON ALL LABOR AND MATERIALS.

PANEL: A, C-H — LOCATION: ELECTRIC ROOM
208Y/120 VOLT — 100 AMP — 3 PHASE — 4 WIRE

CIRCUIT NUMBER	BREAKER A.	BREAKER P.	LOAD TYPE	DESCRIPTION	LOAD A	LOAD B	LOAD C
1	20	1	L	RECEPTACLES – CLASSROOM			
3	–	–	L	–			
5	–	–	L	–			
7	–	–	L	–			
9	–	–	L	RECEPTACLES – MECH/ELEC ROOM			
11	20	3	L	HWP-1			
13	–	–		–			
15	–	–		–			
17	20	3		HWP-2			
19	–	–		–			
21	–	–		–			
23	20	1		SPARE			
25				ACC-1 CONTROL			
27				CEF-3			
29	20	1	L	EF-4			
31				EF-1, 3			
33				SUMP PUMP			
35				SUMP PUMP			
37				EF-1			
39				SPARE			
41				TU-1, 3, 4, 5			
2	20	2	L	RECEPTACLES – CLASSROOM LOBBY			
4	–	–	L	–			
6	–	–	L	RECEPTACLES – DEDICATED PRINTER			
8	–	–	L	RECEPTACLES – CLASSROOM			
10	–	–	L	–			
12	–	–	L	RECEPTACLES – DEDICATED COPIER			
14	–	–	L	–			
16	–	–	L	BOILER #2			
18	–	–	L	BOILER #3			
20	–	–	L	RECEPTACLES – MECH ROOM			
22	–	–		SPARE			
24	–	–		RCP-1, 2, 3			
26	–	–		FIRE/SMOKE DAMPERS			
28	–	–		HWB-1			
30	20	2		UH-4 ELEV.			
32	–	–		–			
34	20	1		SPARE			
36	20	1		**FUEL CELL RECEPTACLE & HEAT TRACE**			**360**
38	**15**	**1**		**FUEL CELL P-1 & METER**	**100**		
40	20	2					
42	–	–					
TOTAL KVA	0.46				100	0	360
TOTAL AMPS	1.28				0.83	0.00	3.00
MAIN BKR.			FEEDER				
BOTTOM			SURFACE			SOLID NEUT.	
TOP			FLUSH			I.C. BUS	
NOTES:							

REGISTERED PROFESSIONAL ENGINEER 27701 JAMES E. MITCHELL EXPIRES 12/31/04

R&W ENGINEERING, INC.
Engineering Integrated Solutions
9420 SW Barbur Blvd., Suite 300
Portland, Oregon 97219
Phone: (503) 245-1325
Fax: (503) 245-1326
E-mail: info@rwengineering.com

PROJECT NUMBER 147.008.001
CONTACT: JIM MITCHELL

REV	DATE	DESCRIPTION	BY

HARKINS HOUSE
PLUG POWER FUEL CELL

DESIGNED	JEM
DRAWN	DPR
CHECKED	JEM
DATE	04/08/03
DRAWING NO.	E1
SHEET	1 OF 1