To-Be BPA High Level Rate Development Process – Inputs Only

Created Date: 4/21/2009

Updated Date: 3/2/2010

This To-Be process diagram describes the high level information flows that are used in the rate making process.

Participants: Ray Bliven, Diane Cherry

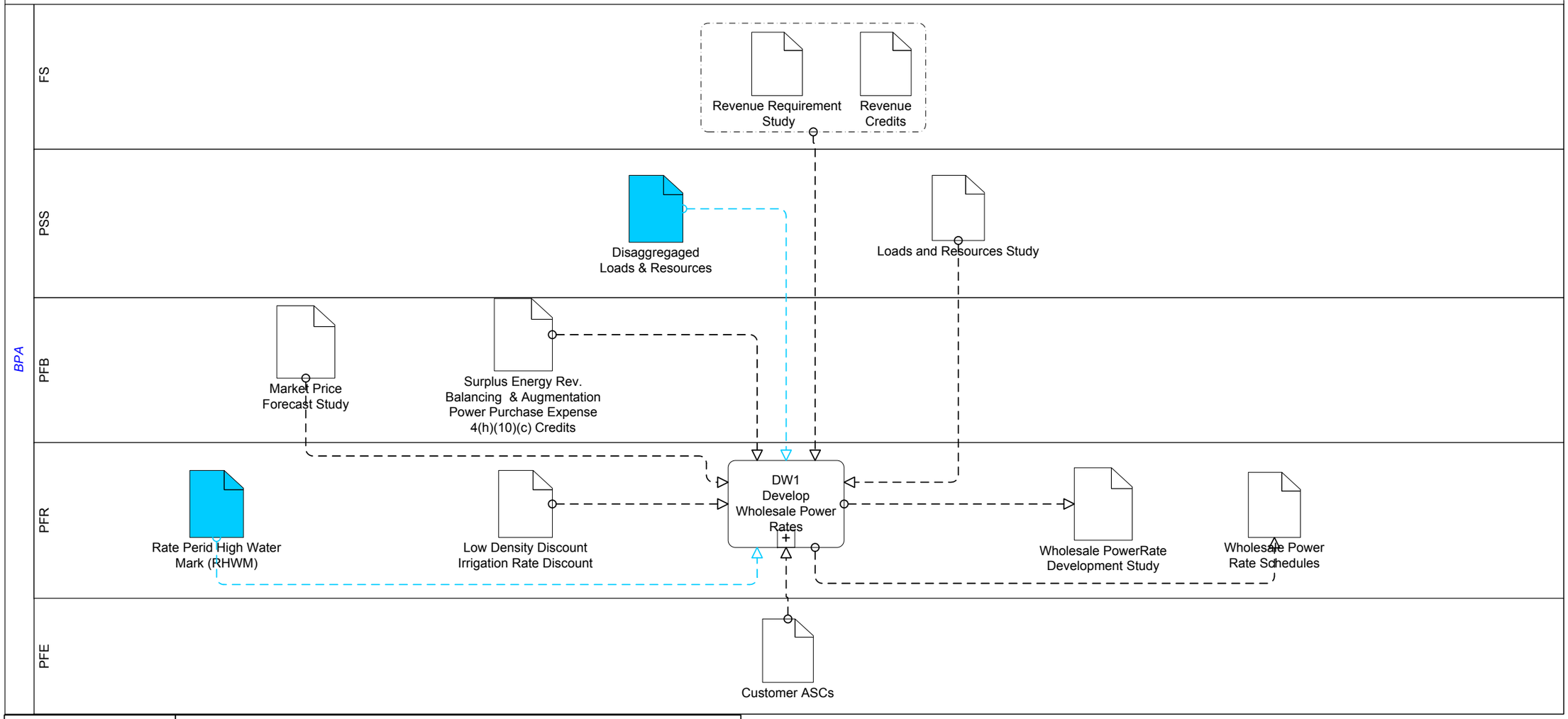

Enterprise Process Id(s):	**Process Assumptions:**
<Number from Enterprise Process Number Schema one per line> *i.e., 4.4.3.4* *4.4.7.5* *4.5.6.2*	• *Describe* **General Process Notes:** • ***Green – Process Completed*** **Purple – Out for Review** **Light Blue – Process Change from As-Is** **Salmon – Process Not Started**

Prepared by: *Tom Stephen*

To-Be BPA High Level Rate Development Process

Created Date: 3/13/2009
Updated Date: 3/2/2010

This To-Be process describes the flow of activities associated with developing the rates for any given rate period. This process begins with the development of the revenue requirements and resource loads and ends with the creation of the Wholesale Power Rates Schedule.

Participants: Ray Bliven, Bill Doubleday

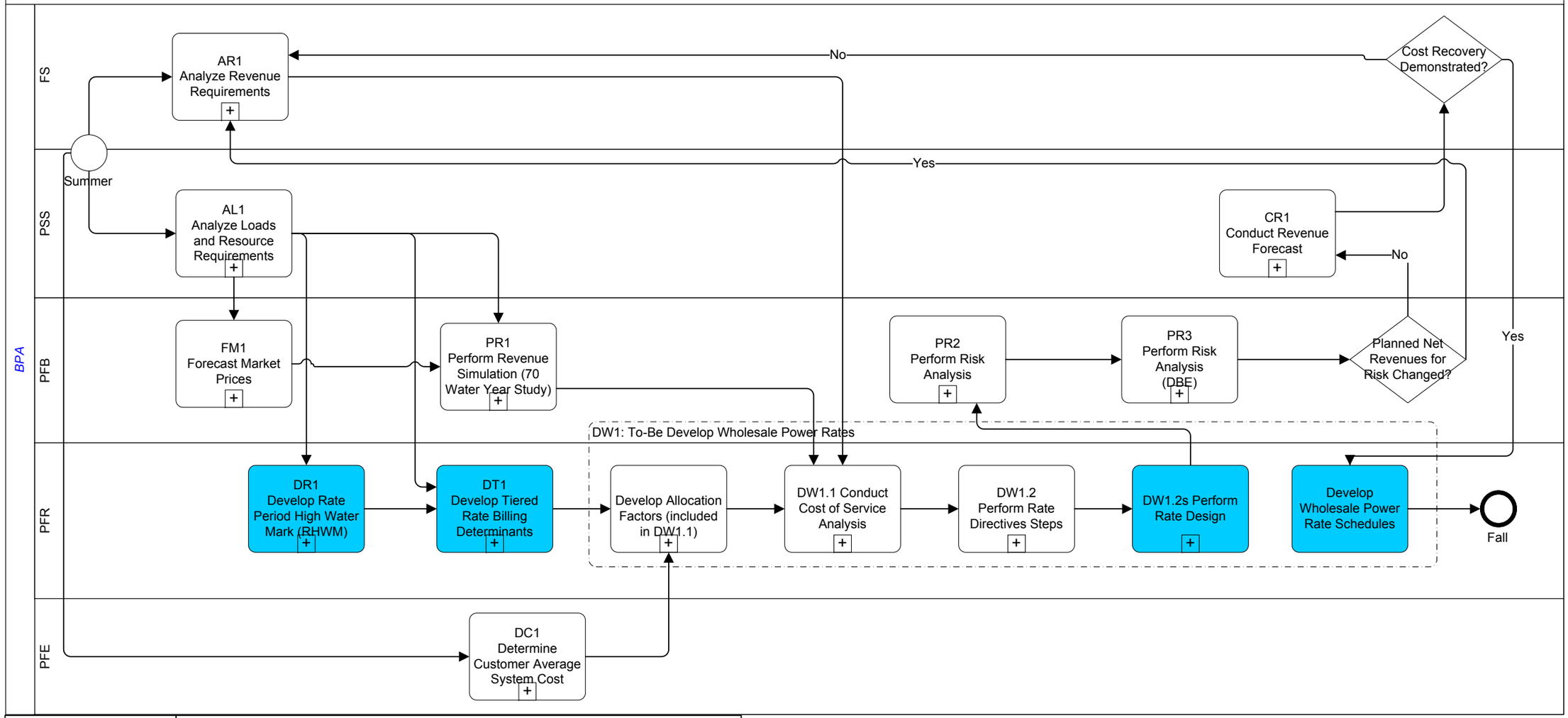

Enterprise Process Id(s):	**Process Assumptions:**
<Number from Enterprise Process Number Schema one per line> *i.e., 4.4.3.4* *4.4.7.5* *4.5.6.2*	• *Describe* **General Process Notes:** • **Light Blue – RAM Processes**

Prepared by: *Tom Stephen*

DR1: To-Be Develop Rate Period High Water Mark

Created Date: 4/24/2009
Updated Date: 3/2/2010

This To-Be process describes the flow of activities associated with calculating customer Rate Period High Water Marks (RHWM). It starts with analyzing CHWMs and Tier 1 System Firm Critical Output and ends with the establishment of the RHWM.

Participants: Ray Bliven, Bill Doubleday, Larry Stene

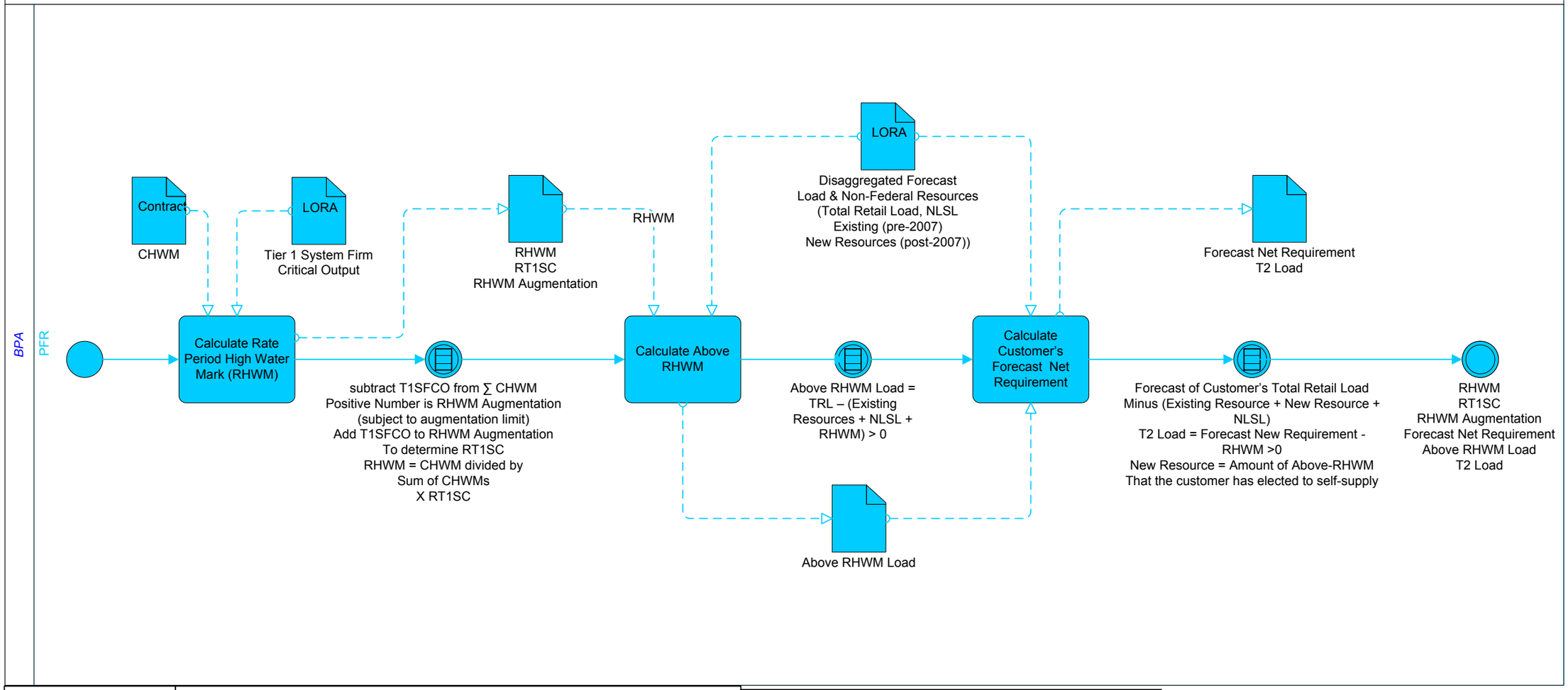

Enterprise Process Id(s):
<Number from Enterprise Process Number Schema one per line>
i.e., 4.4.3.4
4.4.7.5
4.5.6.2

Process Assumptions:
- *Describe*

General Process Notes:
- ***Green – Process Completed***
  Purple – Out for Review
  Light Blue – Process Change from As-Is
  Salmon – Process Not Started

TERMS:
RHWM – Rate Period High Water Mark
RT1SC – Rate Period High Water Mark Tier 1 System Capability
CHWM – Contract High Water Mark
TOCA – Tier 1 Cost Allocator
Netreq – Forecast Customer Net Requirement
THWM – Transition High Water Mark
T1SFCO – Tier 1 System Firm Critical Output

Prepared by: *Tom Stephen*

DT1: To-Be Develop Tiered Rate Billing Determinants

Created Date: 4/24/2009

Updated Date: 3/2/2010

This To-Be process describes the flow of activities associated with analyzing load requirements and balancing resources to create billing determinants to either generate rates or to be used in billing.

Participants: Ray Bliven, Bill Doubleday, Daniel Fisher

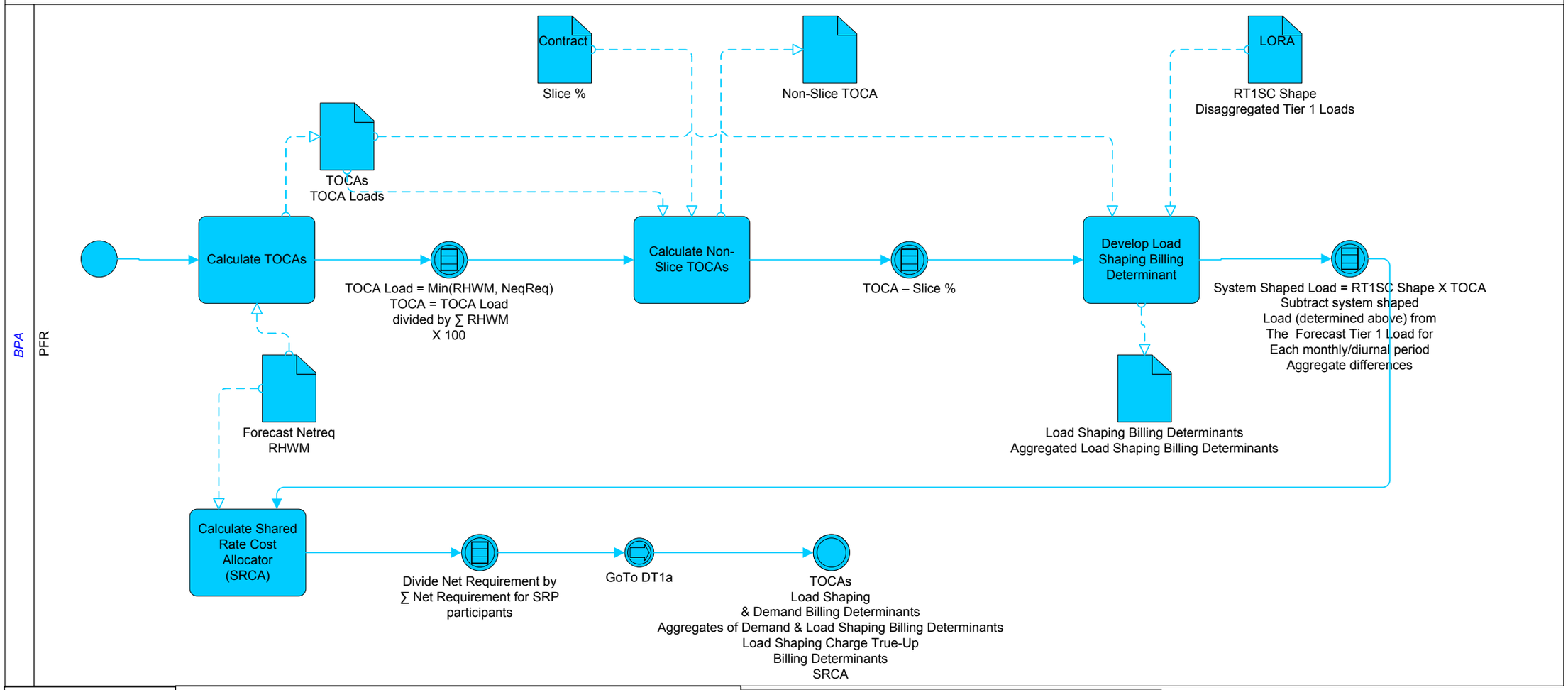

Enterprise Process Id(s):
<Number from Enterprise Process Number Schema one per line>
i.e., 4.4.3.4
4.4.7.5
4.5.6.2

Process Assumptions:
- *Describe*

General Process Notes:
- ***Green – Process Completed***
  Purple – Out for Review
  Light Blue – Process Change from As-Is
  Salmon – Process Not Started

TERMS:
RHWM – Rate Period High Water Mark
RT1SC – Rate Period High Water Mark Tier 1 System Capability
CHWM – Contract High Water Mark
TOCA – Tier 1 Cost Allocator
Netreq – Forecast Customer Net Requirement
THWM – Transition High Water Mark
T1SFCO – Tier 1 System Firm Critical Output

Prepared by: *Tom Stephen*

DT1a: To-Be Develop Tiered Rate Billing Determinants (continued)

Created Date: 4/27/2009

Updated Date: 3/2/2010

This To-Be process describes the flow of activities associated with analyzing load requirements and balancing resources to create billing determinants to either generate rates or to be used in billing.

Participants: Ray Bliven, Bill Doubleday, Daniel Fisher

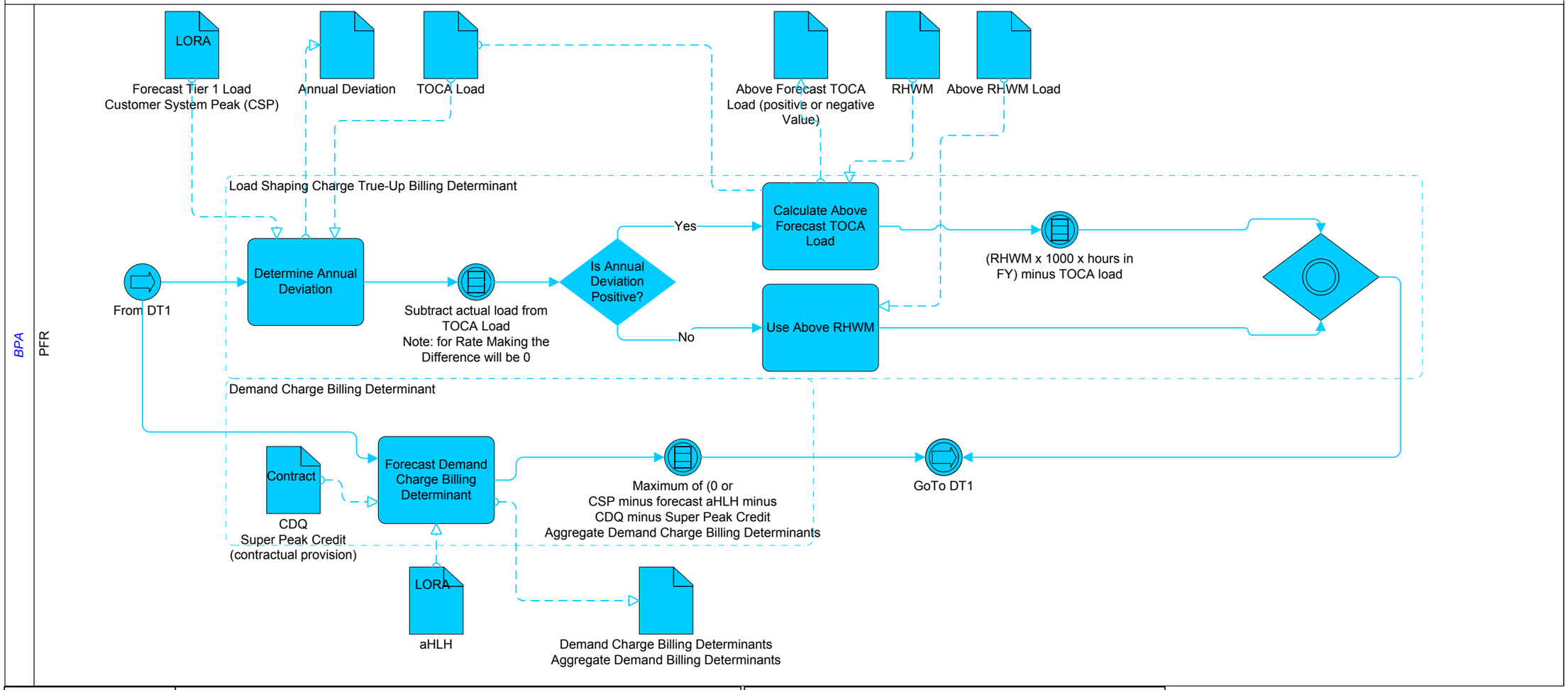

Enterprise Process Id(s):	**Process Assumptions:**	TERMS:
<Number from Enterprise Process Number Schema one per line> *i.e., 4.4.3.4* *4.4.7.5* *4.5.6.2*	• *Describe* **General Process Notes:** • ***Green – Process Completed*** **Purple – Out for Review** **Light Blue – Process Change from As-Is** **Salmon – Process Not Started**	RHWM – Rate Period High Water Mark RT1SC – Rate Period High Water Mark Tier 1 System Capability CHWM – Contract High Water Mark TOCA – Tier 1 Cost Allocator Netreq – Forecast Customer Net Requirement

Prepared by: *Tom Stephen*

DW1: To-Be Develop Wholesale Power Rates

Created Date: 3/18/2009
Updated Date: 3/2/2010

This To-Be process describes the flow of activities associated with developing the rates for any given rate period. This process begins with the receipt of studies or critical data that influence the development of the rate schedule. It may also be initiated as a result of changes to the Planned Net Revenue for Risk (PNRR). The process ends with an iteration of the rate design is complete.

Participants: Ray Bliven, Bill Doubleday

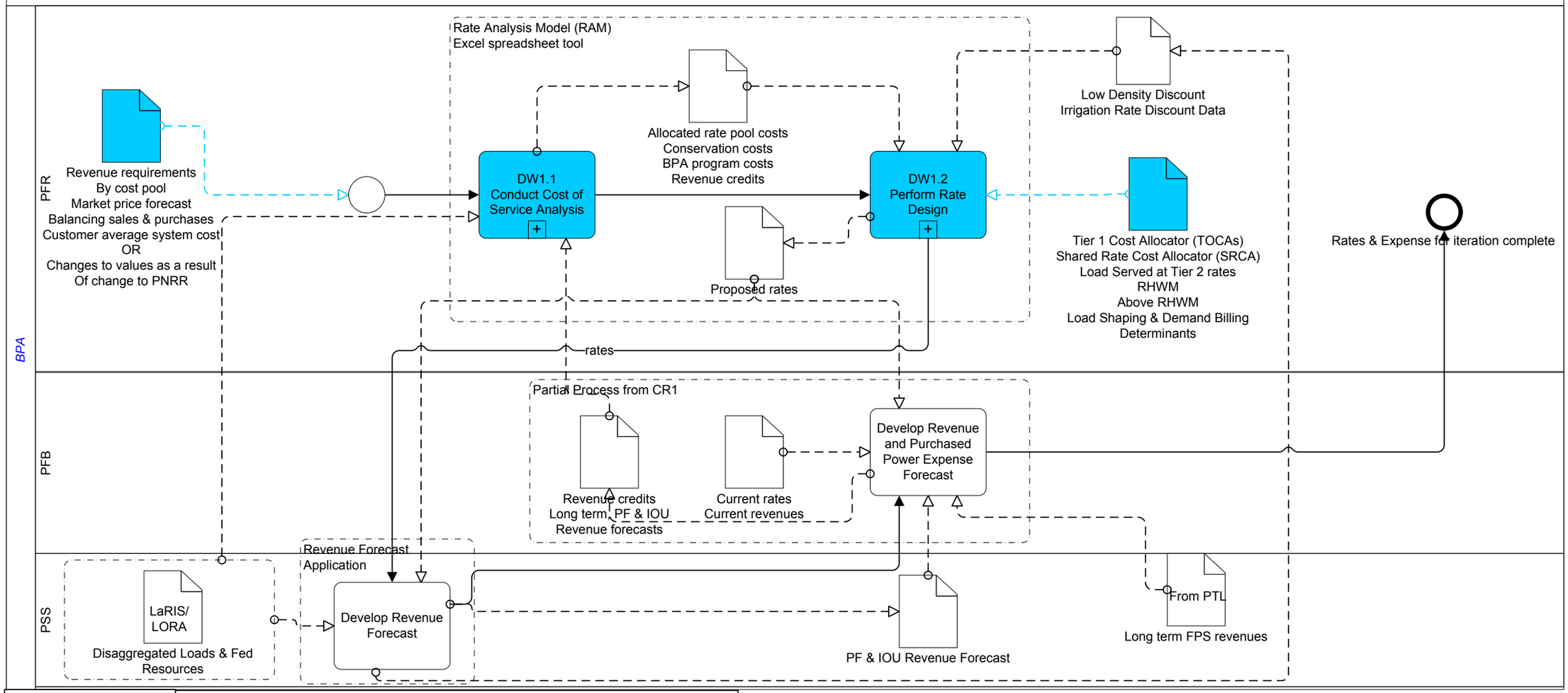

Enterprise Process Id(s):	**Process Assumptions:**
<Number from Enterprise Process Number Schema one per line> *i.e., 4.4.3.4* *4.4.7.5* *4.5.6.2*	• *Describe* **General Process Notes:** • ***Green – Process Completed*** **Purple – Out for Review** **Light Blue – Process Change from As-Is** **Salmon – Process Not Started**

Prepared by: *Tom Stephen*

DW1.1: To-Be Conduct Cost of Service Analysis

Created Date: 3/19/2009
Updated Date: 3/2/2010

This To-Be process describes the flow of activities associated with conducting the cost analysis for any given rate period. This process begins with the receipt of studies or critical data that influence the development of the rate schedule. The process ends with the creation of an initial rate pool cost allocation to be used along with other cost analysis information to perform rate design.

Participants: Ray Bliven, Bill Doubleday

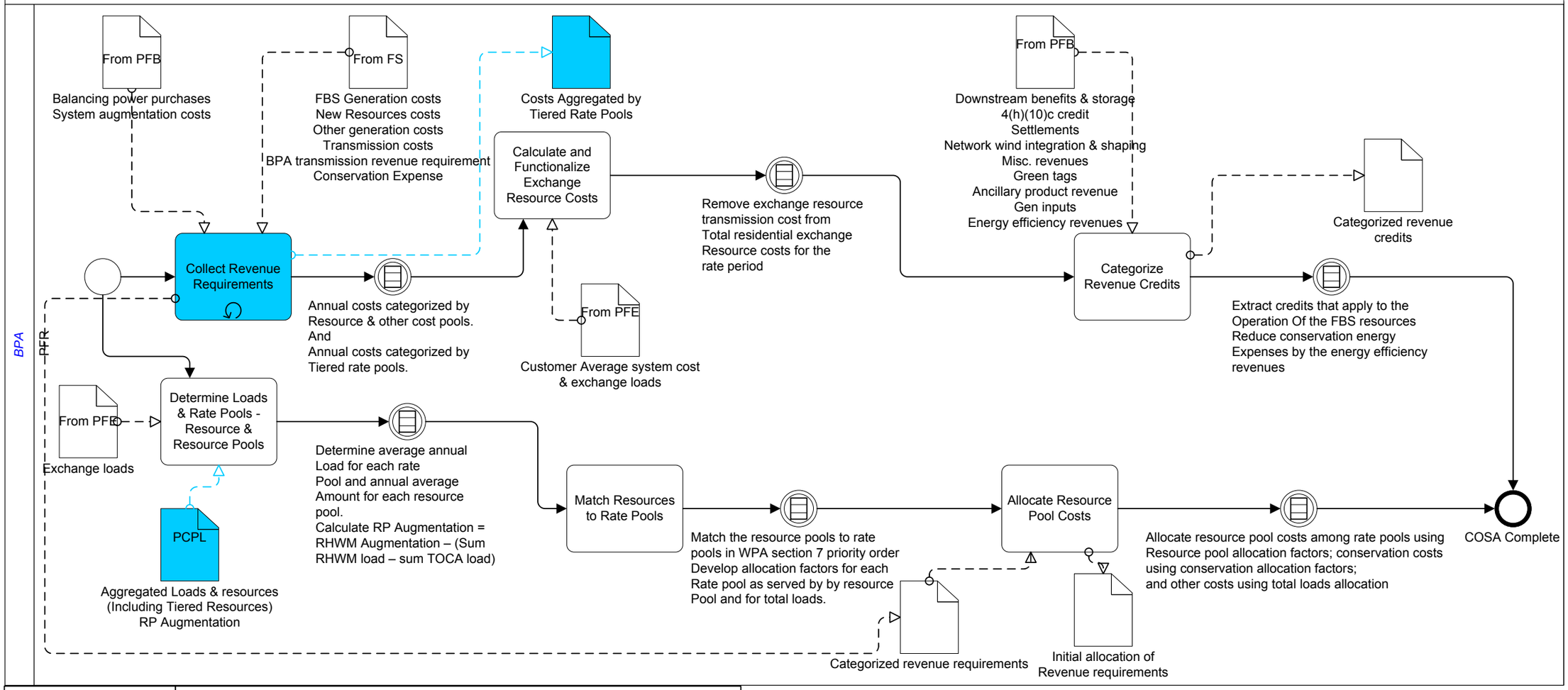

Enterprise Process Id(s):	**Process Assumptions:**
<Number from Enterprise Process Number Schema one per line> *i.e., 4.4.3.4* *4.4.7.5* *4.5.6.2*	• *Describe* **General Process Notes:** • ***Green – Process Completed*** **Purple – Out for Review** **Light Blue – Process Change from As-Is** **Salmon – Process Not Started**

Prepared by: *Tom Stephen*

DW1.2: To-Be Perform Rate Directives Steps

Created Date: 3/24/2009
Updated Date: 3/2/2010

This To-Be process describes the flow of activities associated with adjusting the rates based on revenues and credits. This process begins with the recognition of secondary revenues and finishes with the separation of Slice adjustments.

Participants: Bill Doubleday, Ray Bliven

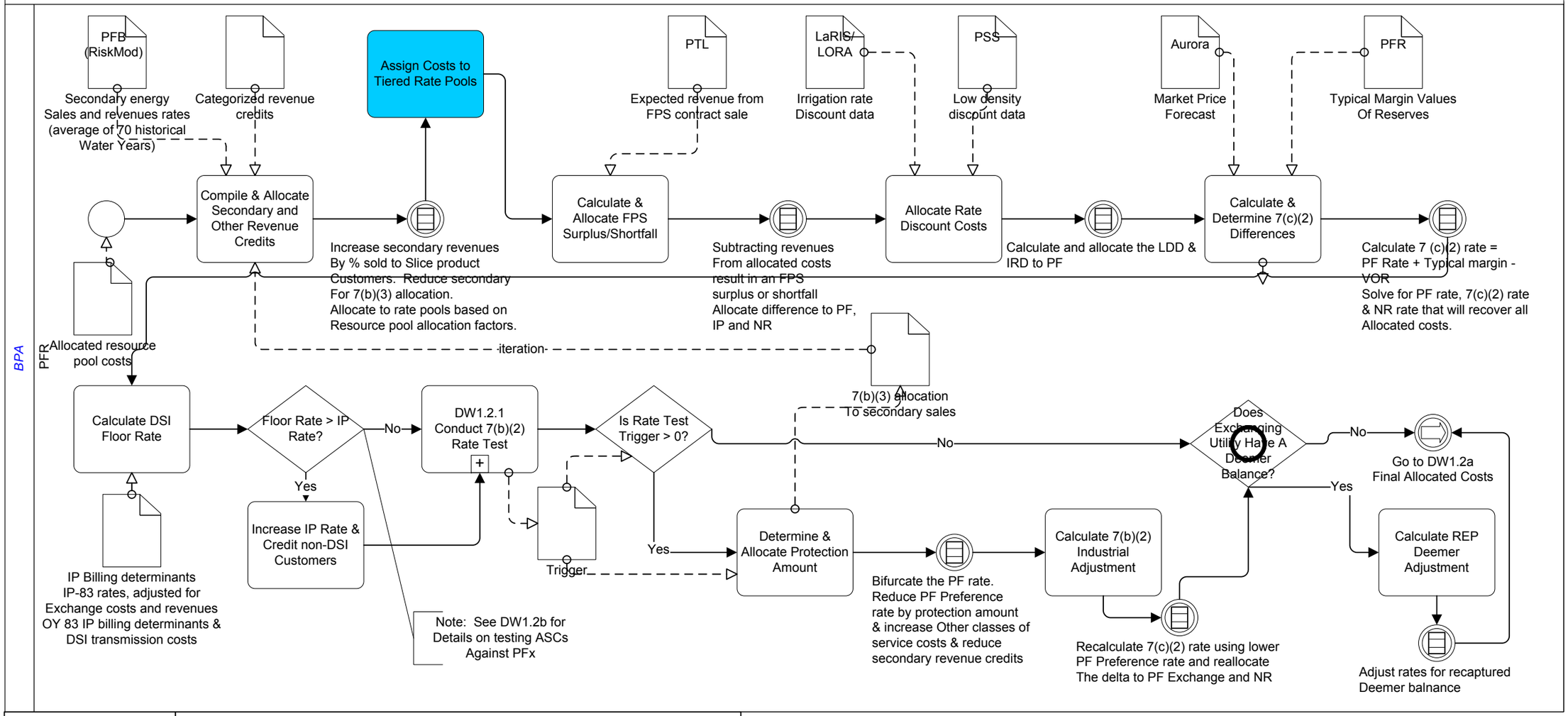

Enterprise Process Id(s):	**Process Assumptions:**
<Number from Enterprise Process Number Schema one per line> *i.e., 4.4.3.4* *4.4.7.5* *4.5.6.2*	• *Describe* **General Process Notes:** • ***Green – Process Completed*** **Purple – Out for Review** **Light Blue – Process Under Development** **Salmon – Process Not Started**

Prepared by: *Tom Stephen*

DW1.2a: To-Be Perform Rate Design

Created Date: 3/26/2009
Updated Date: 3/2/2010

This To-Be process describes the flow of activities associated with adjusting the rates based on revenues and credits. This process begins with calculating credits for cost pools and finishes with the creation of the Rate Period rates.

Participants: Bill Doubleday, Ray Bliven, Daniel Fisher

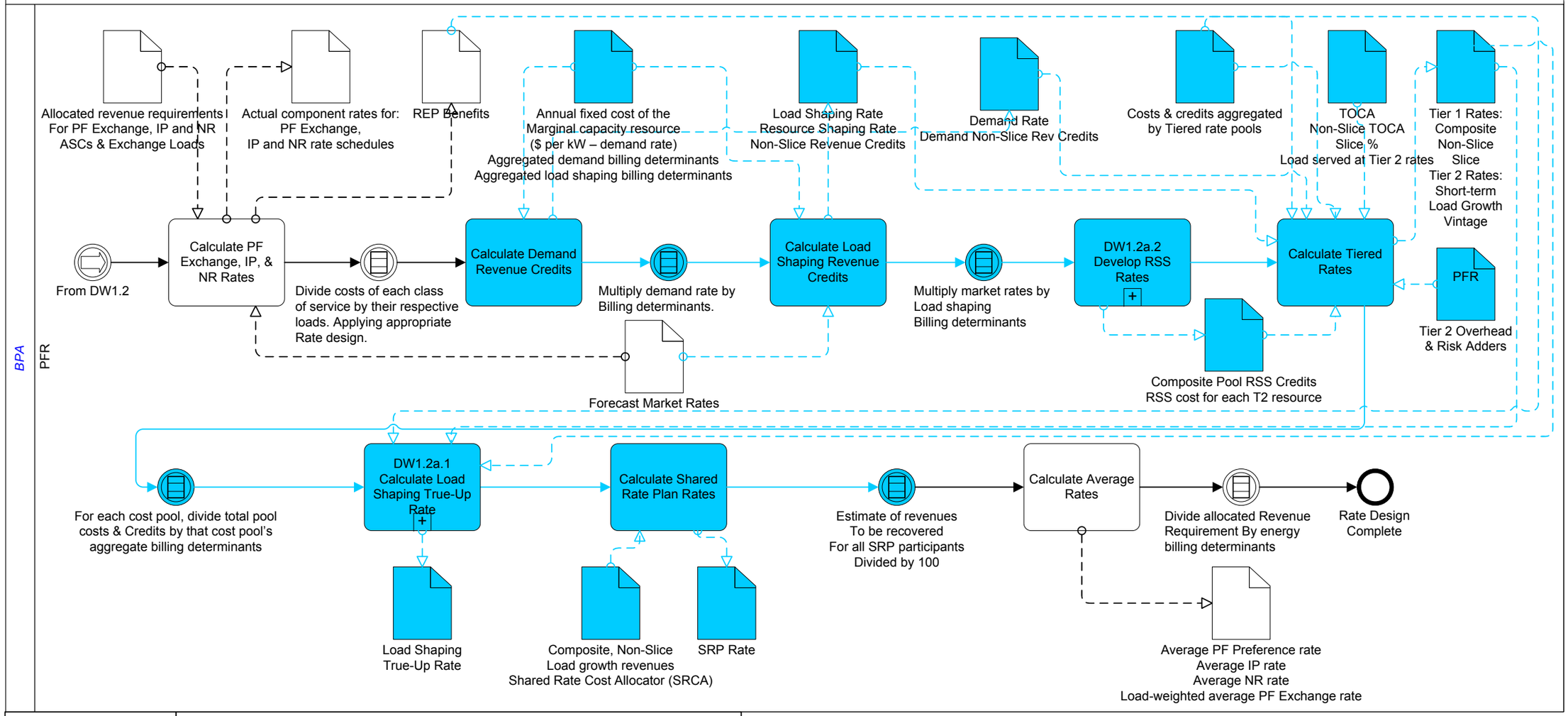

Enterprise Process Id(s):	**Process Assumptions:**
<Number from Enterprise Process Number Schema one per line> *i.e., 4.4.3.4* *4.4.7.5* *4.5.6.2*	• *Describe* **General Process Notes:** • ***Green – Process Completed*** **Purple – Out for Review** **Light Blue – Process Under Development** **Salmon – Process Not Started**

Prepared by: *Tom Stephen*

DW1.2.a.1: To-Be Calculate Load Shaping Charge True-Up Rate

Created Date: 4/28/2009

Updated Date: 3/2/2010

This To-Be process describes the flow of activities necessary to create the load shaping true-up rate. This process determines the difference between the system weighted average of load shaping rates and the composite and non-slice customer rates..

Participants: Ray Bliven, Bill Doubleday, Daniel Fisher

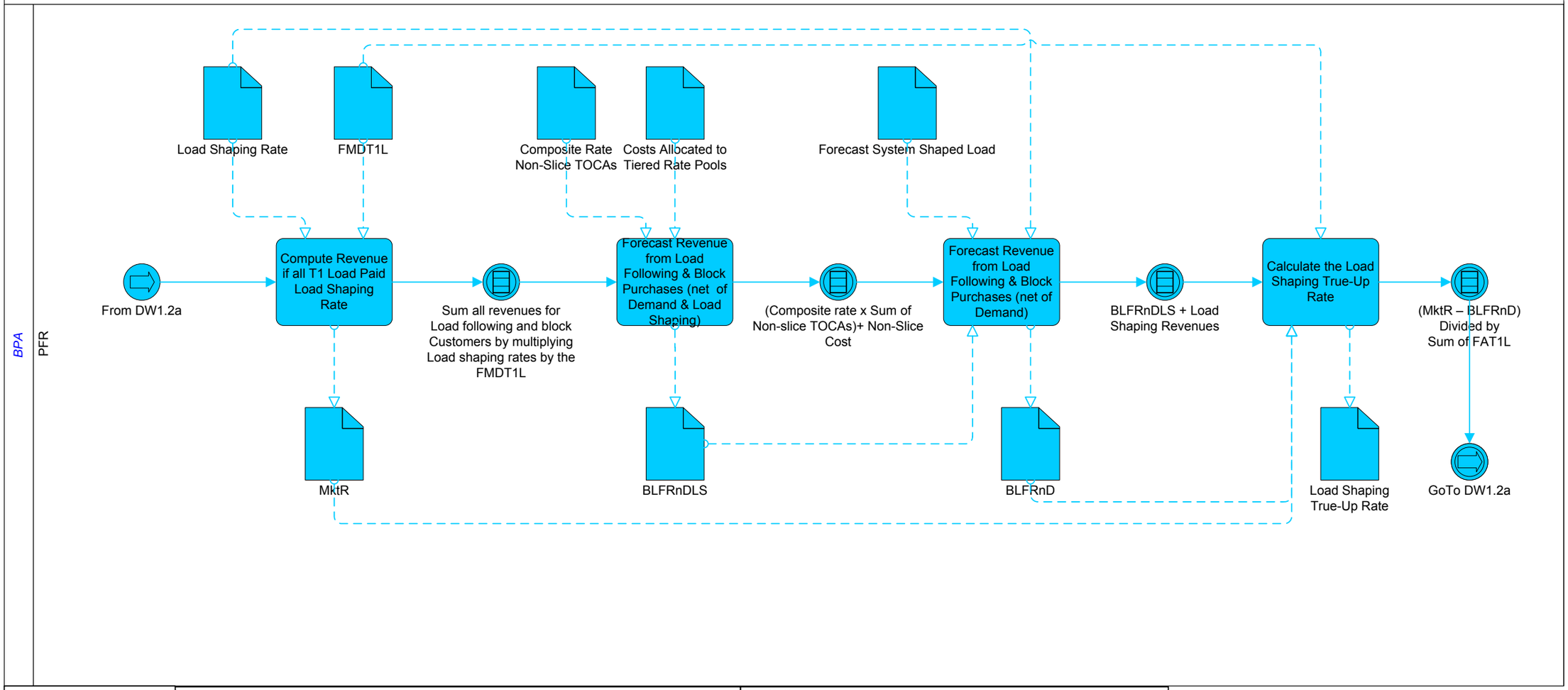

Enterprise Process Id(s): *<Number from Enterprise Process Number Schema one per line>* *i.e., 4.4.3.4* *4.4.7.5* *4.5.6.2*	**Process Assumptions:** • *Describe* **General Process Notes:** • ***Green – Process Completed*** **Purple – Out for Review** **Light Blue – Process Change from As-Is** **Salmon – Process Not Started**	TERMS: FAT1L – Forecast Annual Tier 1 Load FMDT1L – Forecast Monthly/Diurnal Tier 1 Load MktR – Market Revenue BLFRnDLS – Block & Load Following Revenue Net Demand & Load Shaping BLFRnD – Block & Load Following Revenue Net Demand

Prepared by: *Tom Stephen*

DW1.2.a.2: To-Be Calculate RSS Rates

Created Date: 5/13/2009
Updated Date: 3/2/2010

This To-Be process describes the flow of activities necessary to create the Resource Support Service rates. This process begins with the the calculation of Diurnal Flattening Service Capacity Charge and finishes with the establishment of the RSS rates.

Participants: Ray Bliven, Daniel Fisher, Annick Chalier, Gery Bolden

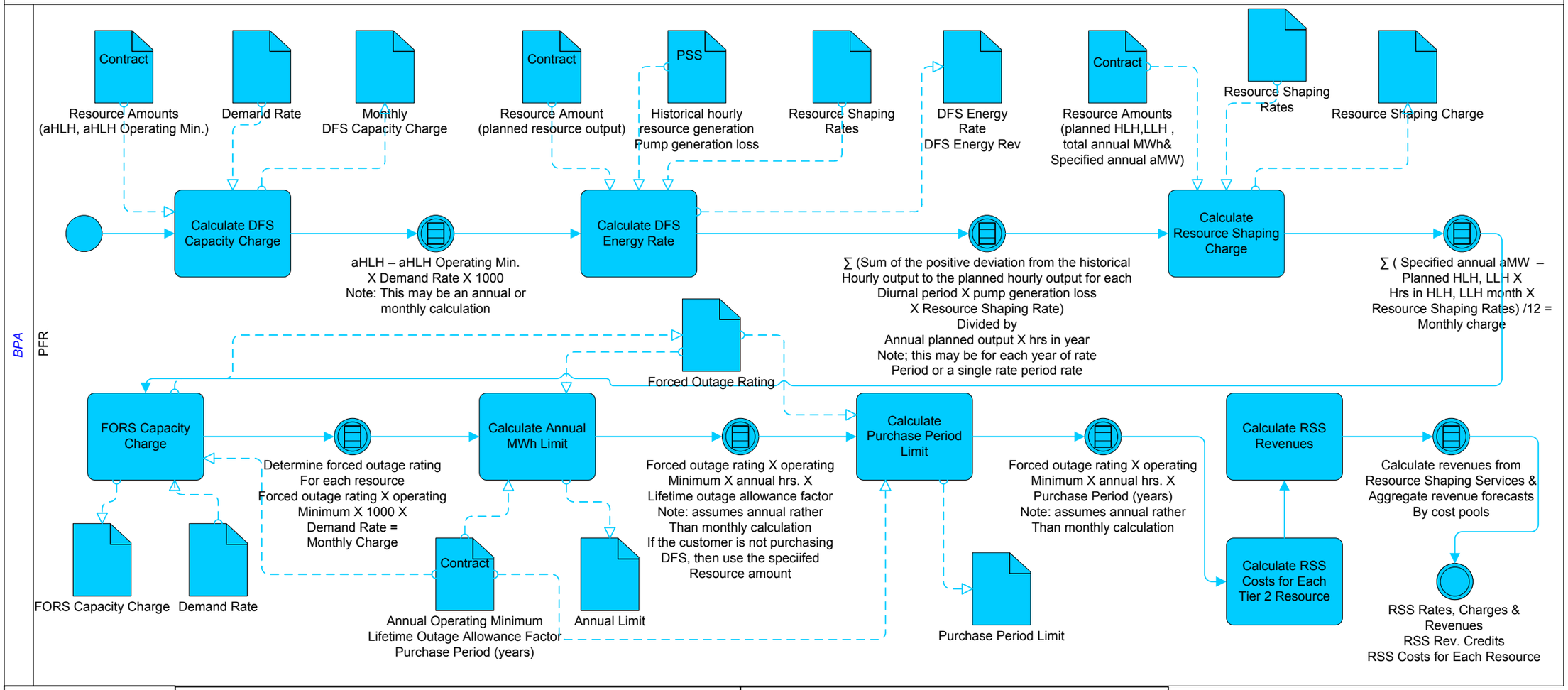

Enterprise Process Id(s):	**Process Assumptions:**	TERMS:
<Number from Enterprise Process Number Schema one per line> *i.e., 4.4.3.4* *4.4.7.5* *4.5.6.2*	• *Describe* **General Process Notes:** • ***Green – Process Completed*** **Purple – Out for Review** **Light Blue – Process Change from As-Is** **Salmon – Process Not Started**	DFS – Diurnal Flattening Service FORS – Forced Outage Reserve Service

Prepared by: *Tom Stephen*

DW1.2b: To-Be Develop PFx Rates

Created Date: 12/15/2009
Updated Date: 3/2/2010

This To-Be process describes the flow of activities associated with calculating the Average System Cost (ASC) and producing the PF Exchange Rates and Exchange Benefits. This is a supplement to the process that describes the development of PF rates.

Participants: Ray Bliven, Tina Ko

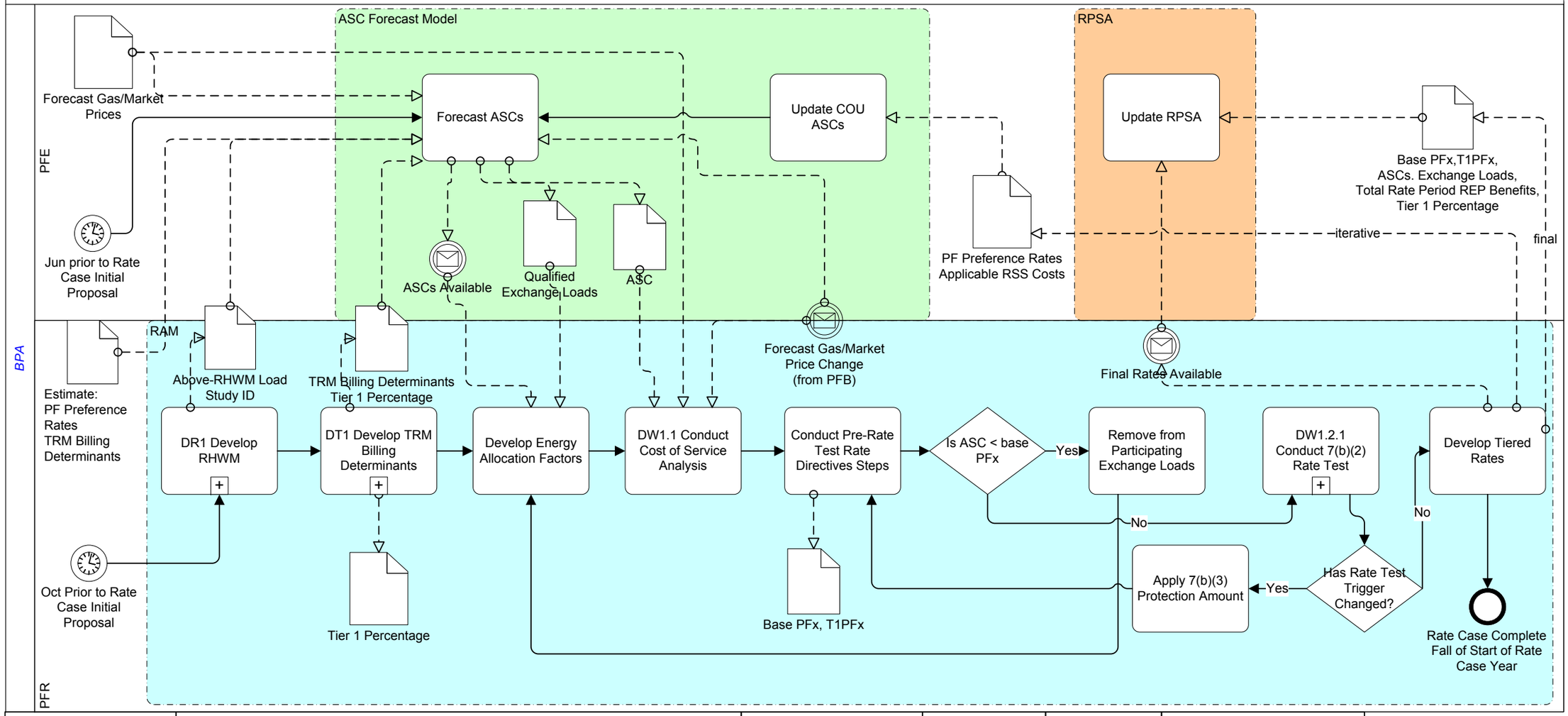

Enterprise Process Id(s):
<Number from Enterprise Process Number Schema one per line>
i.e., 4.4.3.4
4.4.7.5
4.5.6.2

Process Assumptions:
- *Describe*

General Process Notes:
- *Green – Process Completed*
- **Purple – Out for Review**
- **Light Blue – Process Under Development**
- **Salmon – Process Not Started**

Note:
TRM Billing Determinants include:
Slice & Non-Slice TOCAs
Demand Charge
Load Shaping
RSS

Note:
T1 Rates include:
Composite
Slice
Non-Slice
Load Shaping
Demand

Note:
T2 Rates include:
Load Growth
Short Term
Vintages

Note:
RSS Rates include:
Resource Shaping
Monthly DFS Capacity Charge
DFS Energy
FORS Capacity Charge

Prepared by: *Tom Stephen*

DW1.2.1: to-Be Conduct 7(b)(2) Rate Test

Created Date: 3/26/2009
Updated Date: 3/2/2010

This To-Be process describes the flow of activities associated with calculating the annual Program Case rates and the four following years with the proposed Rate Case for the two year rate period. This process begins with completion of the initial cost allocation and completes when the analysis of the current and proposed rates are complete.

Participants: Bill Doubleday, Ray Bliven, Paul Brodie

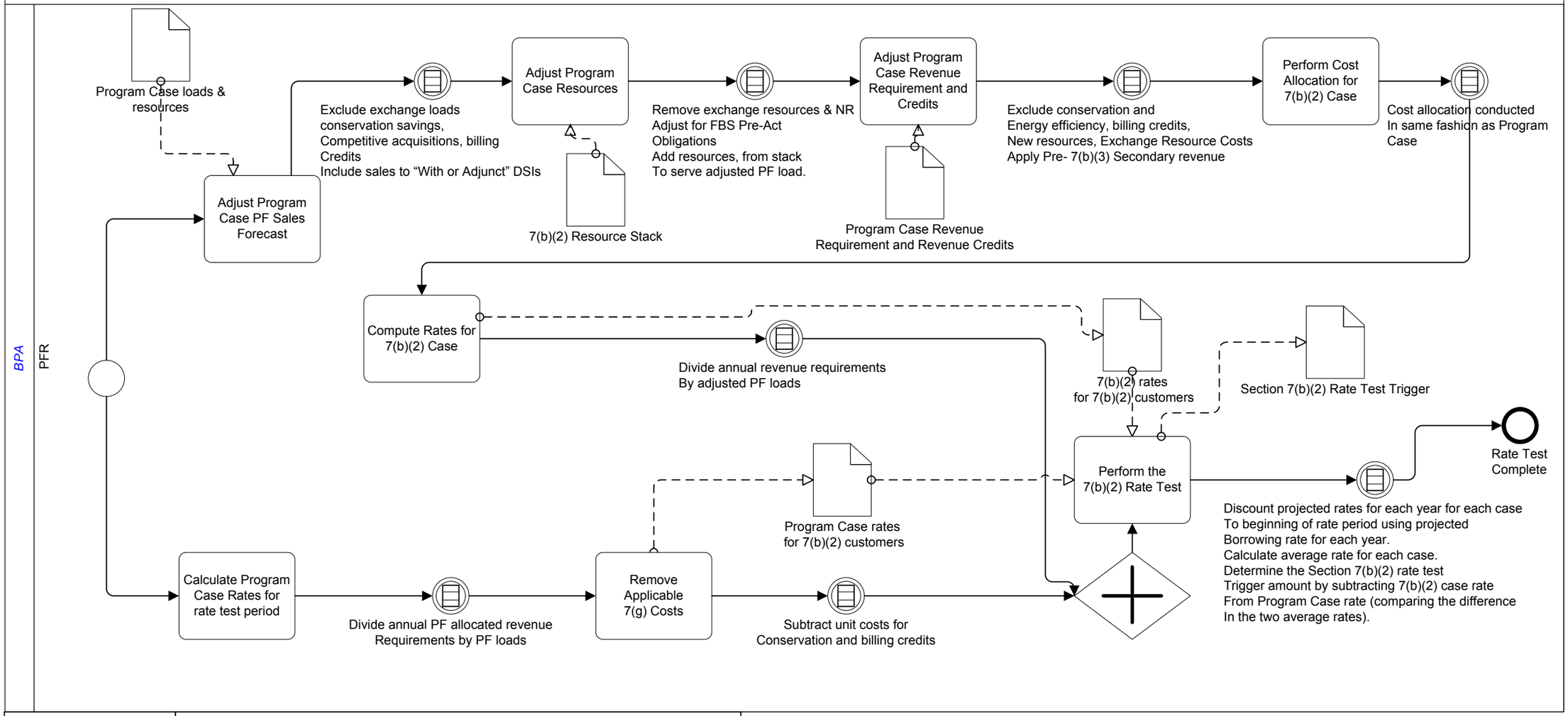

Enterprise Process Id(s):	**Process Assumptions:**
<Number from Enterprise Process Number Schema one per line> *i.e., 4.4.3.4* *4.4.7.5* *4.5.6.2*	• *Describe* **General Process Notes:** • ***Green – Process Completed*** **Purple – Out for Review** **Light Blue – Process Under Development** **Salmon – Process Not Started**

Prepared by: *Tom Stephen*

To-Be Develop Wholesale Power Rates Context Diagram Input
Created Date: 4/7/2009
Updated Date: 3/2/2010

This To-Be context diagram describes the system interactions between the process to develop wholesale rates and the systems that provide provide data.

Participants: Bill Doubleday, Ray Bliven

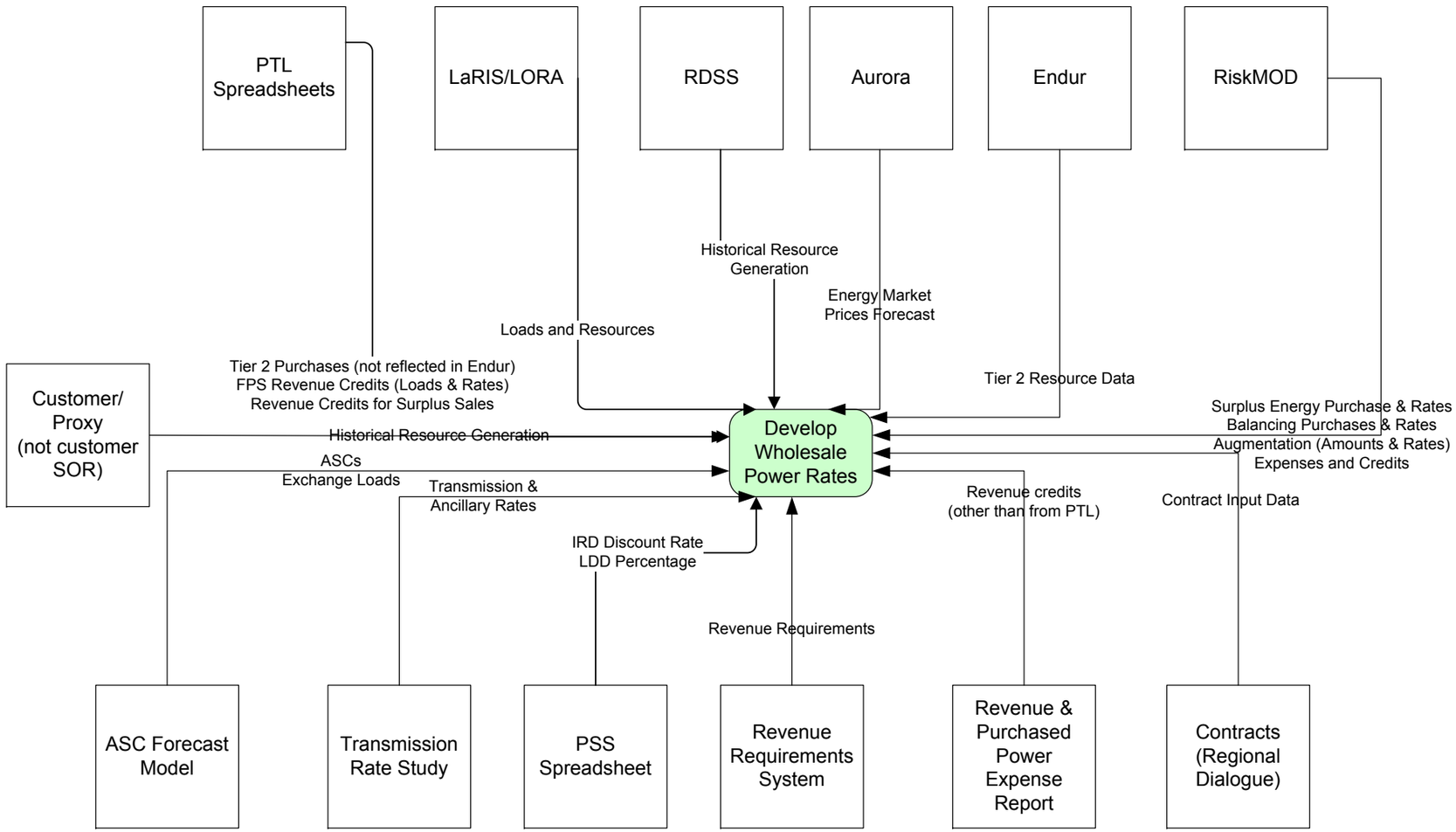

To-Be Develop Wholesale Power Rates Context Diagram Output
Created Date: 4/7/2009
Updated Date: 3/2/2010

This To-Be context diagram describes the system interactions between the process to develop wholesale rates and the systems that receive data.
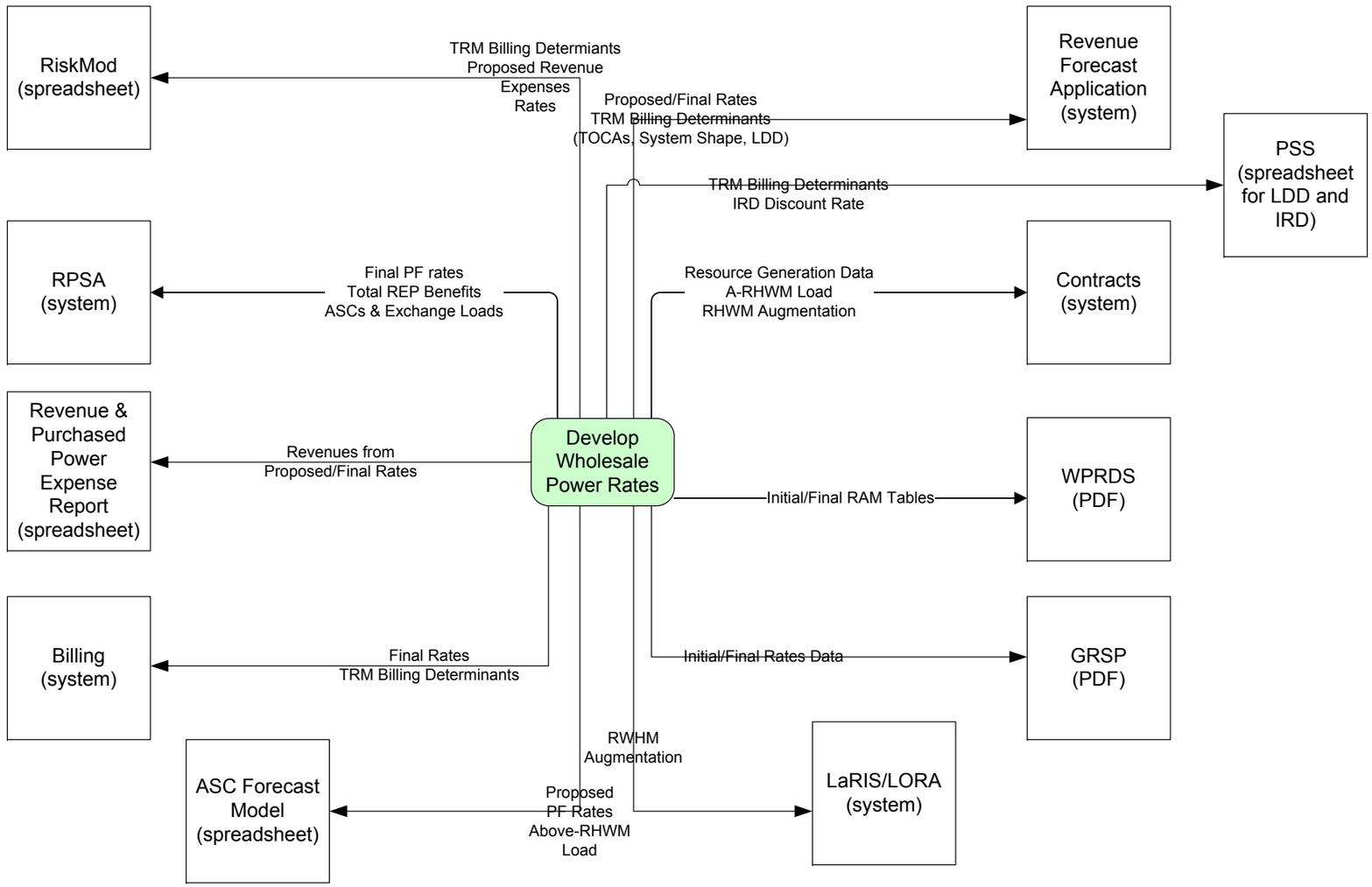
Participants: Bill Doubleday, Ray Bliven