Bonneville POWER ADMINISTRATION

Technical Requirements for Interconnection to the BPA Transmission Grid STD-N-000001 REVISION 13

Standard Content Owner: TPP/TPC/TPMG

DISTRIBUTION STATEMENT: Approved for public release
This document and its contents are to be controlled when obtained external to the Bonneville Power Administration (BPA) or its assigns. Do not reproduce or distribute.
This standard is a continually evolving document that may change without notice. It describes material, standards of quality, and requirements that are applicable to BPA planning, design, maintenance, and construction projects, and it was developed to serve and support BPA's electrical transmission system and infrastructure. Therefore, the requirements presented within may not be compatible with any other electrical utility's system or infrastructure.

TABLE OF CONTENTS

1. INTENT 3
   1.1 Applicable Codes, Standards, Criteria and Regulations 5
   1.2 Effect of the National Environmental Policy Act 5
   1.3 Safety, Protection, and Reliability 5
   1.4 Responsibilities of the Parties 5
   1.5 Special Disturbance Studies 5
   1.6 Cost Estimates 5
2. CURRENT REVISION 6
3. DEFINITIONS, ACRONYMS, AND ABBREVIATIONS 6
   3.1 Definitions 6
   3.2 Acronyms and Abbreviations 13
4. BACKGROUND 13
5. REQUIRED INFORMATION FOR INTERCONNECTION REQUESTS 13
   5.1 Introduction 13
   5.2 Connection Location 14
   5.3 Electrical Data 14
6. SYSTEM PLANNING & PERFORMANCE REQUIREMENTS 15
   6.1 General Configurations 15
   6.2 Special Configurations 15
   6.3 System Strength Requirement 16
   6.4 Requirements for Generator Interconnections 16
   6.5 Large Computational Load (LCL) Ride-Through Requirements 28
   6.6 System Stability and Reliability 34
7. SUBSTATION FACILITY & HIGH VOLTAGE EQUIPMENT REQUIREMENTS 39
   7.1 General Equipment Considerations 39
   7.2 BPA Substation Requirements 40
   7.3 Customer Built Substations and Facilities 40
   7.4 Switchgear 40
   7.5 Transformer Considerations 42
   7.6 Substation Grounding 44
   7.7 Station Service 45

7.8 STATCOM-Type Controllable Reactive Power Devices 46
7.9 Higher Speed Switching of Shunt Capacitors 46
8. TRANSMISSION LINE REQUIREMENTS 46
8.1 Right-of-Way (ROW) Width 47
8.2 Lightning Protection and Grounding 47
8.3 Surge Protection 47
8.4 Underbuild 47
9. CONTROL & PROTECTION REQUIREMENTS 47
9.1 Control and Protection Requirements 47
10. TELECOMMUNICATION REQUIREMENTS 68
10.1 Introduction 68
10.2 Radio Systems 68
10.3 Fiber Optic Systems 69
10.4 Wireline Facilities 69
10.5 Voice Communications 69
10.6 Data Communications 70
10.7 Telecommunications for Control and Protection 71
10.8 Telecommunications during Emergency Conditions 71
11. COMMISSIONING REQUIREMENTS 72
11.1 Pre-energization Inspection and Testing 72
11.2 Technical Operations & Performance Testing Requirements 74
12. COMMERCIAL OPERATIONS & METERING REQUIREMENTS 75
12.1 Data Requirements for System Operation and Scheduling 75
12.2 Telemetering Data Requirements for BPA Control Centers 75
12.3 Voltage Schedules 86
12.4 Reactive Power 87
12.5 Power System Disturbances and Emergency Conditions 87
12.6 Data Requirements for Transmission Grid Modeling 88
13. MAINTENANCE REQUIREMENTS 88
13.1 Outage Planning 88
13.2 Switchable Devices 88
13.3 Frequency and Duration of Outages 89
13.4 Inspection, Test, Calibration and Maintenance 89
13.5 Calibration and Maintenance of Revenue and Interchange Metering 90
13.6 Synchronizing 90
14. QUALIFIED CHANGE 91
14.1 Qualified Change for Generation Facilities and Energy Storage Facilities 91
14.2 Qualified Change for Interconnection Transmission Facilities 92
14.3 Qualified Change for End-User Facilities 92
15. REFERENCES 93
APPENDIX 98

List Of Figures

Figure 1.--- Required Reactive Power Capability at POI (when the POI is inside a defined voltage band around the scheduled voltage)) 19
Figure 2.--- Minimum Reactive Required at the POI Adjusted for POI Voltage (Examples for a 500 kV POI, 230 kV POI, and 115 kV POI). Note that requirements for technologies unable to meet the reactive capability requirements at low power outputs such as type 3 wind turbines are not represented in these plots. 20
Figure 3.--- Example of Important Reference Quantities Required for Acceptable POI Voltage Control 21
Figure 4.--- Type 3/4 Wind Turbines Providing Primary Generator Reactive Power 23
Figure 5.--- Type 1/2 Wind Turbine Reactive Power Control with FACTS-device Controllable Plant-level Reactive Compensation (SVC, STATCOM, DVAR, etc.) 23
Figure 6.--- Voltage Impact on Line Connected Load for VER Generation 25
Figure 7.--- LVRT Duration curve, Modified from NERC PRC-024..... 25
Figure 8.--- Frequency Response from NERC IBR Guidelines..... 27
Figure 9.---Frequency Ride-Through 29
Figure 10.---Voltage Ride-Through 32
Figure 11.--- Integration of Generation into a Transmission Level Substation 57
Figure 12.--- Integration of Generation into a Low Voltage Substation Protected by a High Side Circuit Breaker and Connected to a Transmission Line Through a YG-Δ (as shown) or YG-Δ-YG Transformer..... 58
Figure 13.--- Integration of Generation to an Existing Low Voltage Substation Connected to the Transmission line Through a Fused Δ-YG Transformer 59
Figure 14.--- Integration of Generation to an Existing Low Voltage Substation Connected to a Transmission line a Δ-YG Transformer and Protected by a High Side Circuit Breaker (Switcher) 60
Figure 15.--- Integration of a Typical Wind Generation Facility to a 69 kV or 115 kV Transmission Line Through a YG-Δ-YG Transformer 61

1. INTENT

The Bonneville Power Administration, Transmission Services (TS) prepared this "Technical Requirements for Interconnection to the BPA Transmission Grid" document to identify technical requirements for connecting transmission lines, loads and generation resources into the BPA Grid. Also included are the Balancing Authority Area (BAA) requirements for generation connected to a utility system located within BPA's BAA. The purpose of these requirements is to ensure the safe operation, integrity and reliability of the BPA Transmission Grid.

This document is not intended as a design specification or an instruction manual. The information presented is expected to change periodically based on industry events and evolving standards. Technical requirements stated herein are consistent with BPA's current internal practices for system additions and modifications to the Federal Columbia River Transmission System (FCRTS). These requirements are generally consistent with principles and practices of the North American Electric Reliability Corporation (NERC), Western Electric Coordinating Council (WECC), Western Power

Pool (WPP), Institute of Electrical and Electronics Engineers (IEEE) and American National Standards Institute (ANSI). Standards of the above-mentioned organizations are also subject to change. The most recent version of such standards shall apply to each interconnection request.

Contractual matters, such as costs, ownership, scheduling, and billing are not the focus of this document (for ownership see STD-N-000011, "Equipment Ownership Requirements"). Official requests for Interconnections or Transmission Service are not addressed by this document. BPA's Open Access Transmission Tariff governs the commercial aspects of interconnections and transmission service. Please refer to the BPA web site, www.bpa.gov, or contact a Transmission Account Executive for more information on the interconnection process, business practices, contractual matters or transmission services. Refer to the Large Generator, Small Generator and Line/Load procedures and business practices for additional information.

https://www.bpa.gov/transmission/Doing%20Business/Interconnection/Pages/default.aspx

Requests to interconnect generating resources or loads (Projects) are typically submitted by the project developer but may be made in conjunction with what Transmission Services refers to as a "Host Utility", a utility located within BPA's Balancing Authority Area. BPA refers to the entity that submits the interconnection request as the Requester. BPA evaluates and studies each Project individually, as it was described in the request and determines impacts to BPA transmission facilities and, if applicable, impacts to neighboring affected systems.

This document also addresses interconnection through another utility that may not result in a direct interconnection to the BPA Grid. BPA may incorporate loads, generators or transmission lines into the BPA Balancing Authority Area through telemetering and communications interconnections. This type of interconnection, which uses dynamic signals and telemetering, may transfer ancillary services from one party to another.

Interconnection evaluations and studies usually result in a proposed plan of service for physical and communications interconnections. Physical laws that govern the behavior of electric systems do not recognize boundaries of electric facility ownership. Therefore, the electric power systems must be studied, without regard to ownership, to develop a properly designed interconnection. The completed review may include studies of short-circuit fault duties, transient voltages, reactive power requirements, stability requirements, harmonics, safety, operations, maintenance and prudent electric utility practices.

In this document, the terms BPA, BPA Balancing Authority Area, BPA Grid, etc. all refer only to the BPA Transmission Services organization and transmission system, not to the BPA Power Services (PS) organization. An interconnection request from BPA Power Services is handled in the same manner as from any other Requester.

These technical requirements generally apply to all new or modified interconnections to the BPA Grid and telemetered balancing authority area interconnections. The location and type of the facility and impacts on the BPA Grid or another utility's system

determine the specific requirements. The interconnection must not degrade the safe operation, integrity and reliability of the BPA Grid. The interconnection requirements are intended to protect BPA facilities but cannot be relied upon to protect the Requester's facilities.

1.1 Applicable Codes, Standards, Criteria and Regulations

To the extent that the codes, standards, criteria and regulations are applicable, the new or modified facilities shall be in compliance with those listed in the Reference section.

1.2 Effect of the National Environmental Policy Act

Federal law requires that BPA comply with the National Environmental Policy Act (NEPA). BPA cannot commit to construction or interconnection agreements until its NEPA requirements are satisfied.

1.3 Safety, Protection, and Reliability

BPA will make the final determination as to whether the BPA facilities are properly protected and operationally correct before an interconnection is energized. The Requester or interconnecting utility is responsible for proper protection of their own equipment and for correcting such problems before facilities are energized or interconnected operation begins. BPA may determine equivalent measures to maintain the safe operation and reliability of the BPA Grid. For most generators and some loads, this will include BPA capability for direct tripping through special protection schemes. In situations where there is direct interconnection with another utility's system, the requirements of that utility also apply.

1.4 Responsibilities of the Parties

BPA, the Requester and if applicable, the interconnecting utility, are each responsible for the planning, design, construction, compliance with applicable statutes, reliability, protection, and safe operation and maintenance of their own facilities unless otherwise identified in the construction, operation and/or maintenance agreements.

1.5 Special Disturbance Studies

BPA uses series and shunt capacitors, shunt reactive devices, high-speed reclosing, single-pole switching and high-speed reactive switching at various locations. These devices and operating modes, as well as other disturbances and imbalances, may cause stress on interconnected facilities. This may include the possibility of electro-mechanical resonance between a generator and the power system, or large angle changes when considering high-speed reclosing. BPA conducts studies of interconnection impacts to BPA facilities at the Requester's expense. The Requester is solely responsible for any additional studies necessary to evaluate possible stresses on their equipment and for any corrective actions.

1.6 Cost Estimates

BPA develops application-specific cost estimates for each interconnection study, as each interconnection is different and causes different impacts to BPA facilities. Cost estimates progress with study development, from typical estimates used in the feasibility

and system impact stages, to budget quality cost estimates used for business case and work order approval.

2. CURRENT REVISION

Revision 13, 10/15/2026: Changes in this targeted revision include these sections: Section 3 definition of disturbance; 6.3 System Strength Equation; 6.4.10 Energy Storage; addition of Section 6.5 Large Computational Load Ride Through; 9.1.6 Disturbance Monitoring; 12.2.1.4 DC Metering Requirements; Addition of section14. Qualified Change.

For historical information on what has changed in all previous revisions or updates to this standard, please refer to the background document.

3. DEFINITIONS, ACRONYMS, AND ABBREVIATIONS

For industry standard definitions of electric industry terminology, please refer to:

- The Authoritative Dictionary of IEEE Standards Terms, IEEE 100.
- NERC Glossary of Terms

For the purposes of this document the following unique definitions apply.

3.1 Definitions

Active Power: The 'real' component of complex power carried by an alternating-current circuit, produced by mutually-in-phase components of voltage and current waveforms. Active power can be calculated as the product of apparent power and the power factor. Measured in units of watts (W), kW or MW, active power is associated with useful work, including mechanical work and heat. Active power used or transmitted over time is energy, measured in kilowatt-hours (kWh) or megawatt-hours (MWh.). Also known as 'real power'. See also 'power factor'.

Ancillary Services: The term used by FERC to describe the special services that must be exchanged among generation resources, load customers and transmission providers to operate the system in a reliable fashion and allow separation of generation, transmission and distribution functions. These include: 1) scheduling, system control and dispatching, 2) reactive power supply and voltage control from generators, 3) regulation and frequency response, 4) energy imbalance, 5) spinning reserves, and 6) supplemental reserves. Most of these services are included in a similar set by NERC and termed Interconnected Operations Services, which also include load following and black start capability. As defined by NERC: *"Those services that are necessary to support the transmission of capacity and energy from resources to loads while maintaining reliable operation of the Transmission Service Provider's transmission system in accordance with good utility practice. (From FERC order 888-A.)"* Refer to BPA's open access transmission tariff for further information on how the term is applied at BPA.

Area Control Error (ACE): The instantaneous difference between a Balancing Authority's net actual and scheduled interchange, taking into account the effects of Frequency Bias, correction for meter error, and Automatic Time Error Correction

(ATEC), if operating in the ATEC mode. ATEC is only applicable to Balancing Authorities in the Western Interconnection (NERC definition).

Automatic Generation Control (AGC) System: A process designed and used to adjust a Balancing Authority Areas' Demand and resources to help maintain the Reporting ACE (Area Control Error) in that of a Balancing Authority Area within the bounds required by applicable NERC Reliability Standards.

Balancing Authority Area (BAA): The collection of generation, transmission, and loads within the metered boundaries of the Balancing Authority. The Balancing Authority maintains load-resource balance within this area (NERC definition).

Blackstart Capability: The ability of a generating plant to start its unit(s) with no external source of electric power. (WECC definition)

Blackstart Resource: A generating unit(s) and its associated set of equipment which has the ability to be started without support from the System or is designed to remain energized without connection to the remainder of the System, with the ability to energize a bus, meeting the Transmission Operator's restoration plan needs for Real and Reactive Power capability, frequency and voltage control, and that has been included in the Transmission Operator's restoration plan (NERC definition).

BPA Dispatcher: The BPA Dispatcher or system operator is the ultimate authority on all operations, switching, etc. that can affect the BPA Grid. The BPA Dispatchers work 24/7 in two control centers, Dittmer and Munro control centers.

BPA Grid: The transmission facilities owned or controlled by Bonneville Power Administration, Transmission Services.

Distribution: That part of the electric grid associated with delivery of energy to customers. Distribution-level nominal voltages are generally considered to be 34.5 kV or lower. The set of distribution facilities owned, leased, or operated by BPA is not extensive, and BPA policy is to sell low voltage delivery facilities to distribution utilities whenever possible.

Disturbance: 1. An unplanned event that produces an abnormal system condition. 2. Any perturbation to the electric system. 3. The unexpected change in Reporting ACE that is caused by the sudden failure of generation or interruption of load. (NERC definition)

Dynamic Transfer: The provision of the real-time monitoring, telemetering, computer software, hardware, communications, engineering, energy accounting (including inadvertent interchange), and administration required to electronically move all or a portion of the real energy services associated with a generator or load out of one Balancing Authority Area into another.

Eccentric (Non-Conforming) Loads: Any cyclic load with the ability to change periodically by more than 50MW at a rate of greater than 50MW per minute, regardless of the duration of this change.

Effectively Grounded: A system that provides an X0/X1<3 & R0/X1<1 where X0 and R0 are zero sequence reactance and resistance respectively, and X1 is positive sequence reactance.

Fault: A short circuit on an electrical transmission or distribution system between phases or between phases(s) and ground, characterized by high currents and low voltages.

Feeder: A radial electrical circuit, generally operating at or below 69 kV serving one or more customers.

Ferroresonance: A phenomenon usually characterized by overvoltages and very irregular wave shapes and associated with the excitation of one or more saturable inductors through capacitance in series with the inductor. (IEEE definition). A condition of sustained waveform distortion and overvoltages created when a relatively weak source of voltage energizes the combination of capacitance and saturable transformers.

Generation Site: The geographical location of the Project generator(s) and local generator equipment. This may be near or far from either the Point of Interconnection or the Interconnecting Substation.

Harmonic: A sinusoidal component of a periodic wave or quantity having a frequency that is an integer multiple of the fundamental frequency. (IEEE definition) Harmonics can damage equipment, cause misoperation of relays, and can interfere with communications. Thus, they are an important aspect of power quality and must be controlled by filtering or other methods.

Interchange Metering: Interchange metering measures power crossing the boundary between BPA's Balancing Authority Area and another Balancing Authority Area.

Inter-Control Center Communications Protocol (ICCP): Inter-Control Center Communication Protocol (ICCP) is an international standard communications protocol for real time data exchange. The ICCP is defined in the international standard IEC 870-6 TASE.2.

Inverter-based resource (IBR): A facility that uses a power electronic inverter to change direct-current power to alternating-current power as the method of energy conversion to connect to the transmission system. The facility has a source of power and injects active power from its energy source (such as energy storage systems, solar, wind, or fuel cells) via power electronic interface to the power system. This definition is derived from IEEE Std 2800-2022.

Island, intentional: A utility practice to deliberately isolate a portion of its distribution line to use local generation to serve load during an outage of the transmission system.

Island, unintentional: A portion of an interconnected system that becomes isolated due to system events, resulting in a portion of the transmission system divided split into isolated load and generation groups.

Main Grid: BPA's Main Grid transmission facilities include all 500 kV lines, 345 kV lines, as well as some lower voltage lines and supporting facilities (e.g., transformers)

that carry bulk power within the Northwest. Main grid lines and equipment include the most critical equipment for the reliability of the BPA Grid.

Meter Data Collection (MDC): This term refers to BPA's billing data collection system. BPA used MV-90 to collect this billing data from meters until the year 2020. Now Primestone fulfills the same function as MV-90 for BPA.

The MDC is a translation system which interprets a variety of metering communication protocols used for data collection and analysis. BPA's MDC can poll interval pulse counts from recorders or meters, perform validation, editing, reporting and historical database functions.

MV-90™: The Multi-Vendor Translation System interprets a variety of metering communication protocols used for data collection and analysis. Data is retrieved over network or telephone lines by MV-90™. In addition to polling raw pulses from the recorders, MV-90™ can perform data validation, editing, reporting and historical database functions. MV-90 was first introduced in 1990, hence, the "90."

North American Electric Reliability Corporation (NERC): The North American Electric Reliability Corporation (NERC) is a not-for-profit international regulatory authority whose mission is to assure the effective and efficient reduction of risks to the reliability and security of the grid. NERC develops and enforces Reliability Standards, annually assesses seasonal and long-term reliability, monitors the bulk power system through system awareness, and educates, trains, and certifies industry personnel.

Phase Unbalance: The ratio of voltage or current magnitude in one phase (usually negative sequence) compared to voltage or current magnitude in another phase (usually positive sequence).

Pilot Protection (Pilot Telecommunications): A protection scheme that uses a communications channel between two protective relay terminals to provide data between terminals so that the conditions at the two terminals can be compared. Pilot protection allows for selective high-speed clearing for 100 percent of the protected zone. The communication channel may be power line carrier, microwave (or other radio-based) path, fiber optic circuit, leased telephone line, or a dedicated hardwire circuit.

Point of Interconnection (POI): The physical location on the power system at which Requester-owned facilities connect to those owned by BPA, defining the change of ownership.

Point of Measurement (POM): A point between the collector substation main transformer or generator substation transformer high-voltage bus of an energy source and the *POI*. This definition is derived from IEEE Std 2800-2022.

Power Factor: Power factor is the cosine of the electrical angle between the voltage and current in an alternating current (AC) circuit. The power factor can range only between unity (with voltage and current mutually in phase), and zero (with voltage and current 90 electrical degrees mutually out of phase). A condition of 'lagging' power factor occurs when active power and reactive power propagate in the same direction – e.g., with inductive loads, which always consume reactive power; or with generators,

when delivering reactive power. A condition of 'leading' power factor occurs when active power and reactive power propagate in opposite directions – e.g., with capacitive loads, which always delivers reactive power; or with generators, when consuming reactive power. For generators, operation with a lagging power factor is called an 'overexcited' condition; a leading power factor implies 'under excited' operation.

Power System: Integrated electrical power generation, transmission and distribution facilities.

Power System Stabilizer (PSS): A device that provides an additional input to the exciter of a generator to provide damping of power system oscillations and improve system stability.

Prime Mover: A system that converts the primary energy source into kinetic energy. Examples include steam, hydro, and wind turbine systems.

Project: Non-BPA owned facilities included in the interconnection request.

Project Requirements Diagram (PRD): A document including diagrams and notes produced by Planners that describe the functional requirements for modifying the transmission systems and/or the supporting communications system infrastructure.

Pseudo Tie: A time-varying energy transfer that is updated in Real-time and included in the Actual Net Interchange term (NIA) in the same manner as a Tie Line in the affected Balancing Authorities' control ACE equations (or alternate control processes). Pseudo-ties are used (typically but not exclusively) to represent interconnections between two BAs at a generator or load similar to a *physical* tie line.

Reactive Power: The 'imaginary' component of complex power carried by an alternating-current circuit, produced by components of voltage and current waveforms that are mutually out of phase by 90 electrical degrees. Reactive power can be calculated as the product of apparent power and the sine of the power factor angle. Measured in units of volt-amperes reactive (VARs), kVAR or MVAR, reactive power is associated with the alternating exchange of stored energy between electric and magnetic fields. Although reactive power does no useful work, it is inherently required for operating any alternating-current power system or HVDC converter. By convention, reactive power is absorbed or consumed by an inductance and generated or produced by a capacitance. Reactive power transmitted over time is measured in VAR-hours (VARh). See also 'power factor'.

Real Power: See Active Power.

Real-Time: Data reported as it happens, with reporting (update) intervals no longer than a few seconds. Real-time applies to AGC type data, but not to kWh or RMS data, which are accumulated and reported only when queried by a master station.

Reference Point of Applicability (RPA): The location where the interconnection and interoperability performance requirements specified in this standard apply. This definition is used in IEEE Std 2800-2022 (Adapted from IEEE Std 1547™-2018).

Remedial Action Scheme (RAS): A scheme designed to detect predetermined System conditions and automatically take corrective actions that may include, but are not limited

to, adjusting or tripping generation (MW and Mvar), tripping load, or sectionalizing to accomplish BES stability; maintain acceptable BES voltages; maintain acceptable BES power flows; and limit the impact of cascading or extreme events.

Requester: A dark fiber, electrical utility or other customer or their representative that is requesting a new connection to BPA and/or BPA's fiber system.

Reserves, Non-spinning: That operating reserve not connected to the system but capable of serving demand within ten minutes, or interruptible load that can be removed from the system within ten minutes.

Reserves, Operating: That capability above firm system demand required to provide for regulation, load forecasting error, equipment forced and scheduled outages and local area protection. It consists of spinning reserve and non-spinning reserve.

Reserves, Regulating: An amount of operating reserve sufficient to reduce Area Control Error to zero in ten minutes following loss of generating capacity, which would result from the most severe single contingency. At least 50% of this operating reserve shall be Spinning Reserve, which would automatically respond to frequency deviation.

Reserves, Spinning: Unloaded generation which is synchronized and ready to serve additional demand. It consists of Regulating Reserve and Contingency Reserve.

Revenue Metering: Revenue Metering is used at points of electrical connection with BPA customers to measure demand and energy for providing a bill to the customer. Typical installations require 5-minute kWh IN and OUT, and kVARh IN and OUT data for billing purposes. BPA's MDC is used to collect Revenue Metering data.

Revenue Metering System (RMS): RMS is the generic term used by BPA to describe the collection of data from Revenue Metering. RMS can refer to both the remote devices as well as the Metering Data Collection (MDC).

Single Pole Switching (SPS): The practice of tripping and reclosing one phase of a three-phase transmission line without tripping the remaining phases. Tripping is initiated by protective relays that respond selectively to the faulted phase. Circuit breakers used for single pole switching must be capable of independent phase opening. For faults involving more than one phase, all three phases are tripped. The purpose of single pole switching is to improve system stability by keeping two of the three transmission line phases energized and carrying power while the fault and secondary arc are removed from the faulted phase. Hybrid SPS is a variation that is used on long lines to extinguish the secondary arc of single line-to-ground faults. The faulted phase is detected and opened first via single-pole relaying. After approximately fifty cycles the two unfaulted phases are opened to extinguish the secondary arc, followed by three-phase automatic reclosing.

Station Service: The electric supply for the ancillary equipment used to operate a generating station or substation. (NERC definition) Generally, main grid substations require two sources of station service for reliability.

Supervisory Control and Data Acquisition (SCADA): SCADA consists of local SCADA RTUs at substation sites; SCADA Masters are located at Dittmer Control Center and the Munro Control Center. SCADA RTUs provides remote control and

monitoring of substation power system equipment. Power system equipment quantities are developed by transducers or metering equipment and provided to the substation SCADA RTU. The SCADA Master polls substation RTUs every 2 seconds.

Tap Line or Line Tap: A line that connects to an existing transmission or distribution line without breakers at the tap point, resulting in an additional terminal on the existing line. The connection point may or may not include disconnect switches for isolation of one or all terminals.

Telemetering: is the transfer of analog and digital data from one location to another. The data is typically "real-time" using high-speed communication systems such as microwave radio or fiber. Telemetering for AGC is the transfer of continuous instantaneous (i.e. real-time) kW load or generation data to the AGC system through the SCADA system.

Transformers and Transformer Connections: Large three-phase power transformers can be constructed using separate windings, as autotransformers or a combination of these. Transformers can use one tank for each phase or have all three phases in a single tank. The external winding connections can be delta (Δ) or grounded wye (YG), creating winding combinations such as Δ - YG, YG - YG, YG - Δ – YG.

- Autotransformer: Transformer construction using a single coil where the lower voltage or 'winding' is created by simply tapping that coil at the desired voltage level, creating a metallic connection between the two windings. This is the typical construction used to transform voltages at transmission levels and uses a YG, three-phase connection (e.g. 525:230 kV, 230:115kV).
- Separate windings: Transformer construction where the higher and lower voltage windings are individual coils, only coupled by a magnetic field. This is the typical construction used to transform voltages from transmission to distribution levels and for generator step-up transformers (e.g. 115:12.5 kV, 22:230kV).
- Wye (Y) connection: Transformer connections where one end of each winding of the three phases is connected to a common point and then typically grounded (YG), possibly through an impedance.
- Delta (Δ) connection: Transformer connections where one end of each winding of the three phases is connected to the next phase, creating a closed loop of windings with no connections to a common point.

Transmission: That part of the electric grid associated with bulk transfer of energy, at high nominal voltages (generally defined as 115 kV or above). BPA owns and operates transmission facilities at voltages of 500, 345, 287, 230, 161, 138 and 115. All of BPA's 345 kV- and 287-kV transmission is on lines that are transformer-terminated at both ends.

Variable Energy Resource (VER): Power producing equipment whose power production is mostly determined by an uncontrolled, fluctuating primary energy source such as wind, solar, or tides. VER generation is generally connected to the grid via an inverter rather than a synchronous generator.

Western Electricity Coordinating Council (WECC): Western Electricity Coordinating Council, is the reliability region to which BPA's Balancing Authority Area (control area)

belongs. WECC establishes and enforces reliability standards for operating and planning the bulk electric system in the region. On-line at www.wecc.biz

Western Power Pool (WPP): Formerly called Northwest Power Pool (NWPP), nonprofit Corporation, WPP Membership is a voluntary organization comprised of major generating utilities serving the Northwestern U.S., British Columbia and Alberta. Smaller, principally non-generating utilities in the region participate indirectly through the member system with which they are interconnected. WPP provides coordination services for Transmission Planners and Operators across the NW region.

3.2 Acronyms and Abbreviations

FERC: Federal Energy Regulatory Commission

IEEE: Institute of Electrical and Electronic Engineers

4. BACKGROUND

Copies of this document are available from: BPA's Document Request Line at (800) 622-4520 by requesting DOE/BP– 3624

Or Web:

https://www.bpa.gov/energy-and-services/transmission/interconnection

If you have questions or need additional information, please call BPA's Public Information Center at (503) 230-7334 or (800) 622-4520

If you wish to make comments, please contact Transmission Planning or e-mail comments to studyrequest@bpa.gov.

5. REQUIRED INFORMATION FOR INTERCONNECTION REQUESTS

5.1 Introduction

Requests for generation interconnection to the BPA Grid are made via the Large Generation Interconnection Procedure (LGIP) for generating facilities equal or greater than 20 MW, or by the Small Generation Interconnection Procedure (SGIP) for generating facilities smaller than 20 MW. Requests for non-generation interconnections are made through the Line and Load Interconnection Procedure (LLIP). Requests for energy storage interconnections should be made via the SGIP or LGIP depending on the nameplate peak power capacity. Requesters must contact a BPA Account Executive and refer to BPA Business Practices for application forms and procedures. Business practices related to all Interconnection Requests, including necessary forms, can be found on BPA Transmission's webpage.

https://www.bpa.gov/transmission/Doing%20Business/Interconnection/Pages/interconnection-business-practices.aspx

This section describes typical information and data that BPA requires at various points in the life of the Interconnection Request. All requesters are expected to submit interconnection modeling data according to BPA's STD-N-000001 and NERC MOD-032 requirements. Requesters' lack of timely or complete response for modeling data described here and in supporting document number 5 of this standard, "Interconnection

Model Requirements," STD-N-000001-05, can be grounds for delaying commercial operation of an interconnection, per NERC MOD-032 and NERC IRO-010.

5.2 Connection Location

BPA requires the Requester to submit location information with the interconnection request to adequately study the impacts. Location information required will vary depending upon the proposal.

- Locations of new substations, generators or new line taps on existing lines must include the state, county, township, range, elevation, or latitude and longitude.
- BPA requires driving directions to the location for a site evaluation.
- Identify the substation if connecting to an existing BPA substation.
- For connection to an existing BPA transmission line, identify the line by name as well as the location of the proposed interconnection.

BPA will use the location information and interconnection study results to determine the connection to the transmission system.

5.3 Electrical Data

The specific electrical data required will depend upon the type of connection requested. BPA will provide supplemental data request forms when specific information is required that was not included with the application or other project submittals. The owner must submit updates to BPA as required by NERC Reliability Standards and is expected to complete all necessary BPA request forms with all necessary modeling data required to model the interconnection (MOD-032 Data request form, FAC-008 Ratings Data request form, BPA STD-N-000001-05, "Interconnection Model Requirements"). The IEEE Standard for Interconnection and Interoperability of Inverter-Based Resources (IBRs) Interconnecting with Associated Transmission Electric Power Systems (IEEE Std 2800-2022) Clause 10, Modeling data, and Annex G, Recommendation for modeling data, shall apply to inverter based resources.

5.3.1 *Generator Data*

If one or more generators are included as part of the connection request, the data in STD-N-000001-05 is required, where applicable. If different types of generators are included, data for each different type of generator and generator step up transformer is required. Submit post construction "as built" updates per WECC/NERC requirements to BPA following project commissioning. Include measured net reactive capability as measured at the POI. All data submitters are expected to follow and adhere to NERC MOD-032 requirements.

Generator owners are expected to adhere to NERC MOD-025 requirements in demonstrating advertised reactive power capability. More details on BPA's reactive power requirements can be found in section 6.

5.3.2 *Load Information Requirements*

For load interconnection modeling requirements, see STD-N-000001-05.

6. SYSTEM PLANNING & PERFORMANCE REQUIREMENTS

6.1 General Configurations

Connection of new facilities into the transmission system usually falls into one of three categories. These three categories may result in configuration whereby another utility owns the transmission line or equipment that directly connects to the BPA Grid:

- Connection to an existing 69 kV to 500 kV bulk power substation, with the existing transmission and new connecting lines each terminated into bays containing one or more breakers (depending on the bus configuration).
- Connection to an existing 69 kV to 500 kV transmission line via a tap line
- Connection by looping an existing 69 kV to 500kV transmission line into a new customer or BPA owned substation.

BPA must maintain full operational control of the transmission line. This may include, but not be limited to, SCADA control and monitoring of circuit breakers, disconnects and other equipment in the new substation. Additionally, BPA will retain contractual path capacity rights. New equipment installed in series with the existing transmission line shall have continuous thermal rating not less than the transmission line rating.

A multi-terminal line is created when the new connection becomes an additional source of real power and fault current beyond the existing sources at the line terminals. A line with three terminals affects BPA's ability to protect, operate, dispatch and maintain the transmission line. BPA determines the feasibility of multi-terminal line connections on a case-by-case basis.

If BPA allows a new customer-owned line to tap an existing BPA transmission line, the reliability of the BPA line is decreased due to short-term and long-term outages on the new line. BPA may require switching equipment at the line tap point to provide automatic isolation of the new line if the expected decrease in BPA line reliability is substantial. Each situation is evaluated on a case-by-case basis.

6.2 Special Configurations

The following configurations may substantially affect the costs of a particular connection plan.

6.2.1 *Connection to Main Grid Transmission Lines and Substations*

Main Grid transmission lines include all 500 kV, 345 kV and some lower voltage lines, as defined by BPA's Reliability Criteria and Standards. These circuits form the backbone of the Pacific Northwest transmission system and provide the primary means of serving large geographical areas. In general, BPA requires a substation with additional breakers at the POI to maintain reliability and security of the main grid system. Breaker and a half configuration is typical. See STD-N-000003, "Substation Equipment Arrangement Application Policy" for more on this topic.

6.2.2 *Connection to 287 kV and 345 kV Lines*

BPA can operate its 287 kV and 345 kV transmission lines at either the normal voltage or at 230 kV. Each of these lines is terminated with transformers that can be bypassed for 230 kV operation. BPA reserves the right to operate these lines at 230 kV. If the

transformer fails at a terminal, extended 230 kV operation will be required. For continued operation the connected facilities must also be capable of operating at 230 kV.

6.2.3 *Connection to Series Compensated Transmission Lines*

Series Compensated transmission lines are main grid transmission lines (defined above) that have series capacitors installed in one or more locations along the line. Each series capacitor bank is designed for the location where it is installed including such factors as the length of the line. By interconnecting in the middle of a Series Compensated transmission line, the line is effectively being broken into two (or more) shorter lines. Substantial modification, if not complete replacement of the series capacitor platform will be required.

6.3 System Strength Requirement

BPA requires the short-circuit ratio (SCR) to be 5 or higher with all lines in service (N-0) and 3 or higher under single circuit outages (N-1) for all POIs. The SCR is calculated as follows:

Equation 1

$$SCR_{POI} = \frac{SCMVA_{POI}}{P_{RMW}}$$

Where $SCMVA_{POI}$ is the N-0 or the lowest N-1 outage state short circuit MVA value at the POI and P_{RMW} is the maximum real power output of the resource or maximum real power consumption of a load being connected at the POI.

A Weighted SCR calculation and additional studies may be required to determine an appropriate system strength level where more than one POI is requested in an electrically close area of the transmission system. The Weighted SCR is calculated as follows:

Equation 2

$$WSCR = \frac{\sum_i^N SCMVA_i * P_{RMW_i}}{\left(\sum_i^N P_{RMW_i}\right)^2}$$

Where $SCMVA_i$ is the lowest N-1 outage state short circuit MVA value at bus i without fault current contributions by a new resource and P_{RMWi} is the maximum real power output of the resource or maximum real power consumption of a load to be connected at bus i. *N* is the number of resources or loads fully interacting with each other and *i* is the resource or load index.

6.4 Requirements for Generator Interconnections

6.4.1 *Reference Point of Applicability*

The reference point of applicability (RPA) is the location of measurement to apply the performance requirements for the interconnecting generation plant. The point of interconnection (POI) is the physical location at which the Requester-owned facilities connect to those owned by BPA. The point of measurement (POM) is a point between

the collector substation main transformer or generator substation transformer high-voltage bus and the POI. The default location for the reference point of applicability and the point of measurement will be the point of interconnection. The RPA or a POM may be selected to be different locations than the POI as determined necessary by BPA.

6.4.2 *Generating Facility Most Severe Single Contingency*

The automatic removal of a generating facility single branch, including transformers, collector system lines or cables, and tie line branches to the POI, shall not trip power greater than 1,500 MW. The design of the generating facility shall not create a Most Severe Single Contingency (MSCC) resulting in a resource loss of more than 1,500 MW.

6.4.3 *Inverter Based Resource Requirements*

6.4.3.1 <u>The IEEE Standard for Interconnection and Interoperability of Inverter-Based Resources (IBRs) Interconnecting with Associated Transmission Electric Power Systems (IEEE Std 2800-2022)</u>

The following clauses in the IEEE Std 2800-2022 shall apply to IBR facilities, including the IBR portions of hybrid facilities. These shall be in addition to the requirements in BPA's "Technical Requirements for Interconnection to the BPA Transmission Grid" (STD-N-000001) such that the interconnecting facility meet the IEEE Std 2800-2022 specified clauses below and BPA's STD-N-000001. The IEEE Std 2800-2022 clauses applicable to IBRs are:

4. General interconnection technical specifications and performance requirements
5. Reactive power-voltage control requirements within the continuous operating region
6. Active-power—frequency response requirements
7. Response to TS abnormal conditions
10. Modeling data

Annex G, Recommendation for modeling data, shall apply to inverter-based resources

6.4.3.2 <u>Grid-forming Control (GFM) Requirements</u>

NERC White Paper: Grid Forming Technology defined GFM controls for IBRs as:

Grid Forming Control for BPS-Connected Inverter-Based Resources are controls with the primary objective of maintaining an internal voltage phasor that is constant or nearly constant in the sub-transient to transient time frame. This allows the IBR to immediately respond to changes in the external system and maintain IBR control stability during challenging network conditions. The voltage phasor must be controlled to maintain synchronism with other devices in the grid and must also regulate active and reactive power appropriately to support the grid.

(https://www.nerc.com/comm/RSTC_Reliability_Guidelines/White_Paper_Grid_Forming_Technology.pdf)

BPA requires IBR, Battery Energy Storage System projects (BESS) to operate in a grid-forming control mode. This includes standalone BESS, the BESS portion in ac-coupled hybrid plants, and BESS in dc-coupled facilities, for example a photovoltaic (PV)+BESS applications.

6.4.4 *Reactive Power Requirements*

All generator installations are required to provide reactive power for voltage support of the transmission system. All generation plants interconnected to BPA's system shall be required to provide reactive power compensation as specified in the interconnection planning studies.

Both dynamic and static reactive power may be required for stability purposes and are defined as follows:

- ***Dynamic reactive power*** is provided by fast-acting continuously controllable reactive power devices to provide automatic voltage response to system voltage changes, including generation output changes, grid disturbances to stabilize the power system, and to smooth shunt reactive switching steps. Continuously controllable, fast-acting reactive power devices include synchronous generator excitation systems, generation with electronically controlled output, such as inverter-based resources, and electronically controlled reactive power devices. The typical dynamic reactive power response time frame is from several cycles (after fault interruption) to a second, similar to synchronous generators with modern excitation systems. Common dynamic reactive devices include static VAR compensators (SVCs), static synchronous compensators (STATCOMs), and the inherent dynamic reactive power capability of inverters.
- ***Static reactive power*** is slower acting to maintain a voltage schedule during normal system operation, to aid system recovery after a disturbance, and to maximize the availability of the generator's dynamic reactive power. The typical static reactive power response time frame is several seconds to a minute. Static reactive power elements often include mechanically switched shunt capacitors and reactors and are implemented in a programmable logic controller as part of the generation installation's control system.

NERC's Reliability Guideline for BPS-Connected Inverter-Based Resource (IBR) Performance defines a generator's Point of Measurement (POM) as the high side of the generator step-up transformer, the main transformer(s) at the collector substation(s) stepping the voltage up from the collector system level to transmission system level. FERC Order 827 requires all generators to provide reactive power support at least to the POM, in accordance with the Transmission Provider's interconnection requirements for power factor and reactive capabilities (FERC Order 827 additionally requires synchronous generators to provide reactive power support to the POI).

BPA requires all generation plants (synchronous and non-synchronous) to be capable of providing the Minimum Plant Reactive Capability for all MW output levels at all times including periods when primary power is unavailable (e.g. night for solar generating facilities). For normal voltages, POI voltages inside a defined voltage band around the scheduled voltage, Minimum Plant Reactive Capability is defined as +/-33% of the plant's nameplate MW in dynamic MVARs at the POI. The voltage band around the scheduled voltage is defined by plus/minus a percentage of the scheduled voltage. The percentage amount can range from 0 to 1.5% and the default is 1%. Plants with inverter technology unable to meet this performance when actual power output levels at 10% or

less of nameplate MW (e.g. doubly fed induction generators) may request a study to determine if reduced dynamic MVAR capability is permissible.

According to NERC's Guideline for IBR Performance, IBRs should utilize the dynamic reactive capability from the inverters to the greatest possible extent within the specified power factor requirements (Figure 1). Inverters should not have artificial settings imposed to limit reactive power output.

BPA Transmission Operations publishes voltage schedules in terms of the POI. Requestors are responsible for ensuring voltage control strategies support the POI voltage schedule. The POI is the default RPA and POM. Additional Voltage control requirements are covered in Section 6.4.4.1.

Figure 1 illustrates the required Minimum Plant Reactive Capability for any generation plant at the POI, when the POI voltage is inside a defined voltage band around the scheduled voltage. This rectangular characteristic is more stringent than FERC's "triangular" minimum requirement for 0.95 lead/lag power factor when operating at plant nameplate MW.

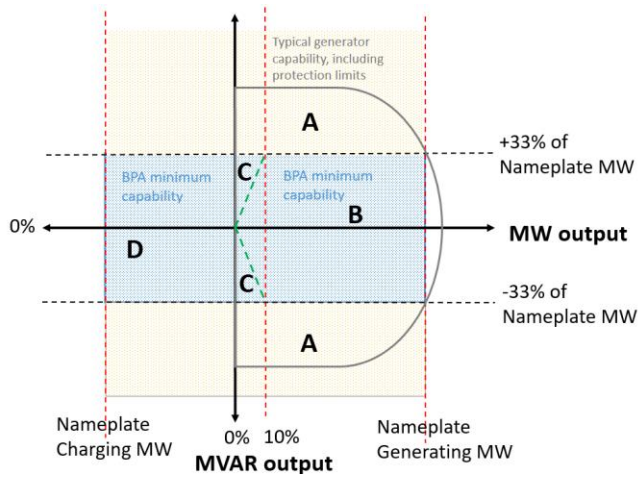

Figure 1.--- Required Reactive Power Capability at POI (when the POI is inside a defined voltage band around the scheduled voltage))

Note A: Exceeds Minimum Plant Reactive Capability region, comprised of dynamic devices and any static devices if applicable. A plant is permitted and encouraged to be capable of operating in this region.
Note B: Minimum Plant Reactive Capability region, comprised of dynamic reactive power devices. Required for any MW output level.
Note C: Plants with inverter technology unable to meet the Minimum Plant Reactive Capability at real output levels of 10% or less than nameplate MW may request a study to determine if reduced dynamic MVAR capability is permissible. Plants shall not have artificial settings imposed to limit reactive power output in this region.
Note D: Energy storage components must provide dynamic reactive support equal to 33% of Nameplate for any charging levels (negative MW), as most storage components are expected to be synchronous or otherwise interconnected via capable inverter technology.

Figure 2 illustrates the POI voltage adjusted Minimum Plant Reactive Capability using examples for POI voltages at 500 kV, 230 kV, and 115 kV. Inside the voltage band the Minimum Plant Reactive Capability is defined as +/-33% of the plant's nameplate MW in

dynamic MVARs at the POI. The voltage band is defined as plus/minus a percentage of the scheduled voltage. The voltage band percentage can range from 0 to 1.5% and the default is 1%. Above the voltage band the Minimum Plant Reactive Capability for boosting voltage (injection) reduces until it reaches zero. Below the voltage band the Minimum Plant Reactive Capability for bucking voltage (absorption) reduces until it reaches zero. The points at which the Minimum Plant Reactive Capability reaches zero are plus/minus a percentage of the scheduled voltage. The percentage can range from 2 to 5%. The default percentages are 3% for 500 kV and 230 kV POIs and 4% for a 115 kV POI.

The Minimum Plant Reactive Capability requirements are to ensure a deliverable reactive capability for the defined POI voltage schedule and system conditions.

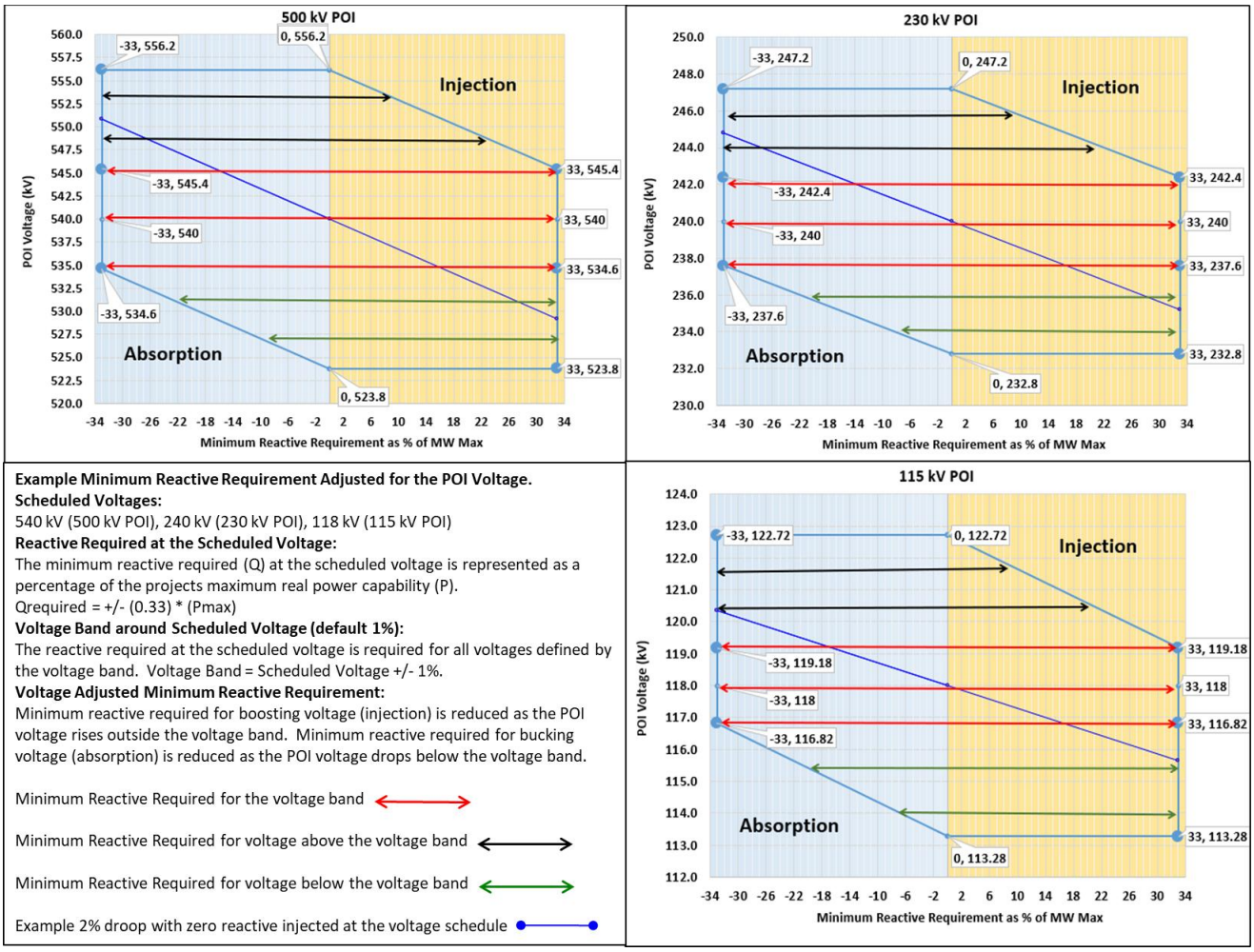

Figure 2.--- Minimum Reactive Required at the POI Adjusted for POI Voltage (Examples for a 500 kV POI, 230 kV POI, and 115 kV POI). Note that requirements for technologies unable to meet the reactive capability requirements at low power outputs such as type 3 wind turbines are not represented in these plots.

As permitted by the BPA interconnection study, automatically switched shunt reactive devices may be allowed as part of the plant's overall control system to meet the

Minimum Reactive Capability requirements. Additional shunt reactive devices shall also be required as part of the interconnection to compensate for the effects of lower voltage collector system reactive losses, reactive charging, step-up transformer reactance, transmission line reactive losses (tie-lines to the POI), transformer taps/turns ratios, bus-fed auxiliary loads, and collector system impacts during low power output levels.

All shunt reactive devices shall be coordinated with a power plant voltage controller or similar coordinated controller, such that reactive device switching is optimized for dynamic reactive reserves needed at the POI during transmission system disturbances. The voltage controller shall coordinate mechanically switched shunts and dynamic reactive resources to provide smooth shunt reactive switching steps. The power plant voltage controller shall be capable of receiving BPA voltage reference signals for the POI scheduled voltage, and account for any line drop compensation looking forward through the substation step-up transformer impedance to the POI. When the voltage at the control point is above the scheduled voltage, the plant is expected to consume reactive power (inductive operation). When the voltage at the control point is below the scheduled voltage, the plant is expected to supply reactive power (capacitive operation). This includes coordination of but not limited to shunt device status, shunt device output, POI reference voltage and collector system voltage.

All generator installations will be required to provide data on reactive capability. See Section 12 for Dispatch and Data Requirements and Table 10.

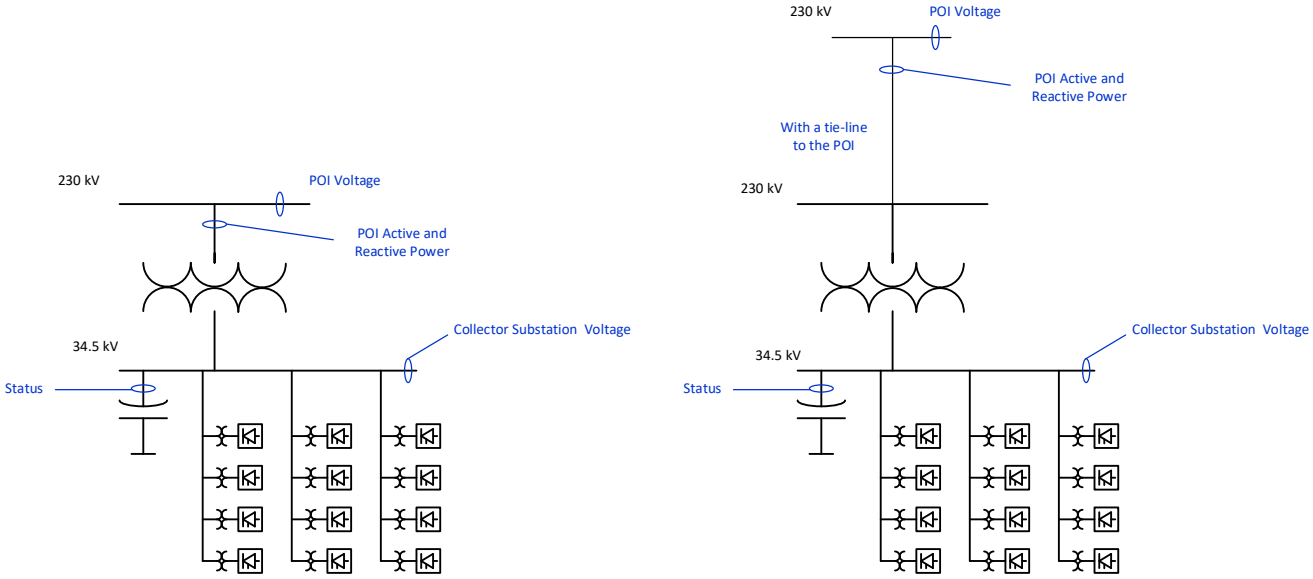

Figure 3.--- Example of Important Reference Quantities Required for Acceptable POI Voltage Control

Generation must be able to maintain their Minimum Reactive Capability and voltage schedule at the POI at all times including when transitioning between control modes (e.g., NightVAR mode, WindFree mode, day mode, etc.) and shall not violate POI voltage swing requirements as listed in section 6.4.4.1 or as required by the interconnection study. These requirements must also be met during times of no and low real power output, such as times of low solar irradiance or low wind.

6.4.4.1 Voltage Control

All generators interconnected to BPA's transmission system are expected to control voltage at the respective POI. BPA expects the POI scheduled voltage to be used as a primary reference or input to the plant's overall control scheme. BPA Operational Voltage schedules are also discussed in section 12.3 and 12.4. Automatic Voltage Regulation (AVR) is required for all generators regardless of size, unless BPA grants an exception. The interconnection customer shall equip each generator with AVR and shall operate AVR in voltage control mode at all times when the generator is synchronized to the transmission system. Voltage control shall include line drop compensation or reactive current compensation, to provide fast response for major system events while desensitizing for small changes in voltage. POI voltage must be controlled with a 2% reactive droop. The 2% reactive droop is defined at the POI, such that a +/- 2% change in POI voltage from the voltage schedule will result in a full reactive response from the generating facility, or reactive injection/absorption at the POI equal to 33% of the plant's nameplate MW. Intentional deadband or additional time delays in the voltage control are not permitted without concurrence by BPA. "Power factor control" or equivalent operating mode is also not permitted for AVR control designs.

AVRs should be of continuously acting solid-state analog or digital design. Generator voltage regulators to the extent practical should be tuned for fast response to step changes in terminal voltage or voltage reference. Commissioning tests will require plants to demonstrate a voltage step response, see STD-N-000001-01, the voltage and frequency control commissioning supplement to this document.

For applications where no external dynamic devices are required, the AVR control system shall be sufficiently fast to react to the maximum change in generation anticipated without invoking the operation of transmission-level (high side of POI) voltage control devices such as shunt capacitors and tap changers. The control system shall be coordinated to minimize operation of customer load regulation equipment including voltage regulators and tap changers. This typically requires the control system to adjust switched reactive compensation in less than 20 seconds. For switched reactive equipment supporting generation reactive power requirements, voltages at the POI shall not vary more than 0.5% per switching operation; and POI voltage shall not deviate more than 1% due to rapid fluctuations in generation output. When the need is identified by BPA studies, the requester will be required to provide dynamic controllable compensation, such as a STATCOM.

Voltage regulator controls and limit functions (such as over and under excitation and volts/hertz limiters) shall coordinate with the generator's short duration capabilities and protective relays. The AVR over-excitation limiter shall include an 'inverse-time' type, adjusted to coordinate with the generator field circuit time-overcurrent capability. Automatic voltage regulation shall be restored automatically when system conditions allow field current below the continuous rating. BPA may request connection of the voltage regulator line drop compensation circuit to regulate a virtual location 50–80% through the step-up transformer reactance.

Supplementary automatic control is required to adjust the AVR set point to meet the BPA network side voltage schedule. This supplementary control should operate in a

10–30 second time frame and may also balance reactive power output of the power plant generators.

6.4.4.2 Asynchronous Double-fed Wound Rotor Induction Generators (Type 3) and Generators with Solid-State Inverters (Type 4)

For Type 3 and 4 wind generation, the continuous dynamic response reactive power is provided by each generator or the solid-state equipment at each generator per BPA system planning studies. The generation facility has a voltage controller in voltage control mode that dispatches reactive power output from each generating unit (Type 3 or 4) and controls switched shunt reactive devices.

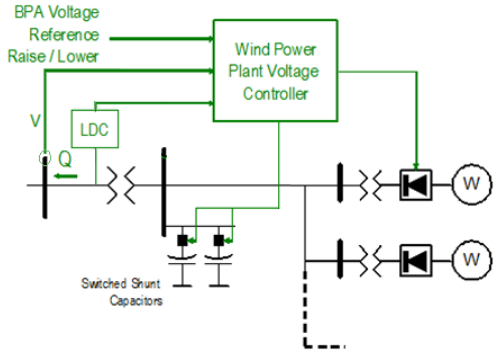

Figure 4.--- Type 3/4 Wind Turbines Providing Primary Generator Reactive Power

(Note: Voltage controller switches shunt devices to maximize available dynamic reactive reserves & meet BPA reactive requirements at the POI.)

6.4.4.3 Asynchronous Squirrel Cage Induction Generators (Type 1) or Wound Rotor Induction Generators (Type 2)

Large asynchronous generators with only switched capacitors for power factor (PF) correction shall provide reactive power compensation via supplementary external equipment as specified in the BPA system planning studies. For Type 1 and 2 wind generators, the dynamic reactive power is supplied by a separate fast-acting, continuously controllable reactive power device (STATCOM or SVC typically) providing compensation in response to the power plant voltage controller, while the individual generators operate in constant power factor mode. The dynamic reactive power device is typically connected to the power plant collector bus.

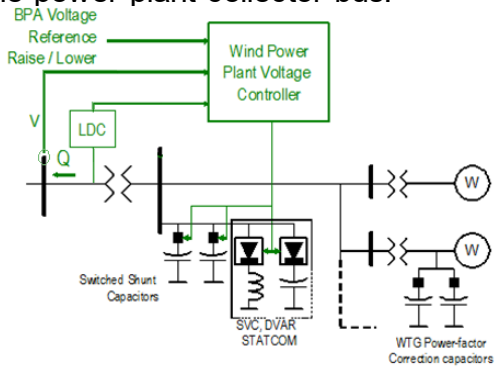

Figure 5.--- Type 1/2 Wind Turbine Reactive Power Control with FACTS-device Controllable Plant-level Reactive Compensation (SVC, STATCOM, DVAR, etc.)

(Note: Switched shunts used to meet BPA's reactive power requirements at the POI)

6.4.4.4 Synchronous Generators

Synchronous generator excitation equipment shall follow industry best practice and applicable industry standards. The excitation equipment includes the exciter, automatic voltage regulator, PSS and over-excitation limiter. Supplementary controls are required to meet BPA transmission voltage schedules.

All synchronous generators shall be operated with their excitation system in the automatic voltage control mode unless approved otherwise by the transmission system operator. Continuous automatic voltage control should not be overridden by supplementary power factor or reactive power controls that are either part of the automatic voltage regulator or the power plant distributed control system.

Generators shall maintain a network voltage or reactive power output as required by BPA within the reactive capability of the units. Generator step-up and auxiliary transformers shall have their tap settings coordinated with the electric system voltage requirements.

The synchronous generator exciter is normally of the brushless rotating type or the static thyristor type. The excitation system nominal response shall be 2.0 or higher (for definitions see IEEE Standard 421). The excitation system nominal response defines combined response time and ceiling voltage. In some cases, the high initial response static type may be required to economically improve power system dynamic performance and transfer capability.

A PSS is required on each individual generator with nameplate rating 20 MVA or above and may be required on other generator units based on BPA interconnection study. The interconnection requester shall include a PSS feature in the generator AVR (such as software module within the AVR) or shall have the PSS function coordinated with the generator AVR function. Interconnection requester shall maintain the PSS in-service at all times the generator is synchronized to BPA's transmission system. The PSS shall be dual input integral of accelerating power type (IEEE type PSS2A) and must meet minimum performance requirements as described in the "WECC PSS Design and Performance Criteria". The PSS input can be a speed-related signal derived from terminal voltage and current measurements used in the basic AVR. BPA recommends that the PSS be included in the procurement specifications as an integral part of the voltage regulator, such that AVR and PSS tuning can be performed as part of commissioning.

6.4.4.5 Mitigating Voltage Quality Impacts to the Transmission System

If a power plant is connected to a weak transmission system, the power output fluctuations may cause excessive voltage changes for transmission customers in the area due to fluctuations in transmission line power flows. The voltage change at V2 may cause excessive operation of customer load tap changers and voltage regulators. The generator voltage control system shall be coordinated to minimize operation of customer load regulation equipment including voltage regulators and tap changers. This may typically require the control system to adjust reactive compensation in less

than 20 seconds and the reactive step size such that switching action does not cause voltage change outside regulator's voltage band. Figure 6 illustrates the issue.

Perceptible flicker may also result from the change in voltage at the terminal of the generation project for changes in generation output and / or as the power output changes the line loading voltage. As the power plant output fluctuates, so does the customer POI voltage, even if the voltage at plant POI is held constant.

When the need is identified by BPA studies or from operational experience, the project will be required to provide dynamic controllable reactive compensation such as SVC.

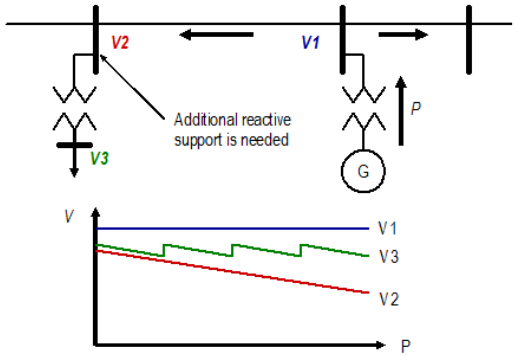

Figure 6.--- Voltage Impact on Line Connected Load for VER Generation

6.4.5 *Generator Low Voltage Ride-Through Capability*

All generator installations shall meet NERC and WECC requirements for low voltage ride through (LVRT). The generator(s) shall be capable of staying on-line for nearby faults, except for faults on the line or bus the generator is connected to. This includes traditional thermal, hydro, wind, solar PV, and solar thermal greater than 20 MW. Small generation installations (less than or equal to 20 MW) LVRT capability will be as determined by BPA studies.

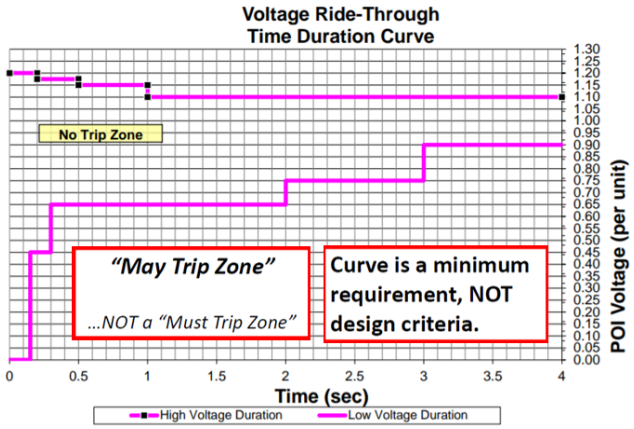

Figure 7.--- LVRT Duration curve, Modified from NERC PRC-024

In addition to the NERC and WECC LVRT requirements, all generators must meet the BPA under/over voltage and under/over frequency requirements for operation in the BPA system listed in this document, unless BPA Planning has determined otherwise.

Section 9.1.4.3.1 prescribes the voltage with time delays requirements for generators. Frequency requirements are listed in

in section 9.1.4.3.2.

6.4.6 *Frequency Control Equipment (Governors and Inverters)*

According to FERC Order No. 842, all new interconnecting generating facilities (large and small, synchronous and asynchronous) shall install and enable primary frequency response capability as a condition of interconnection.

To comply with NERC BAL-003-1 Reliability Standard, BPA may need to acquire frequency response from generators within its Balancing Authority. Therefore, BPA requires that all generators have capabilities to provide frequency response, specifically:

- Prime mover control (governors and inverters) shall operate with appropriate speed/load characteristics to regulate frequency
- Prime mover control (governors and inverters) should operate freely to regulate frequency. Governor droop should be set between 3% and 5% with a total governor dead band (intentional plus unintentional) not to exceed +/-0.06% of 60HZ (+/-36 mHZ). The frequency control shall have an active power step response time, time to reach 90% of the total final response, of less than 5 seconds. When the step response time is not achievable due to physical limitations of the interconnecting plant, this requirement can be modified. The fastest response achievable by generating plant technology is required. It is expected that fast acting technologies, such as IBRs, should operate in less than 5 seconds and generation plants limited by slower prime movers, such as hydropower, may require a longer step response time. These characteristics should in most cases ensure a coordinated and balanced response to grid frequency disturbances. Prime movers operated with valves or gates wide open should control for overspeed or overfrequency.

Plant secondary controls, such as load controllers, when used, must have a frequency bias setting, ensuring that plant controls do not restrict frequency response. BPA realizes that some generating facilities will operate at maximum turbine output unless providing frequency control and spinning reserve ancillary services. BPA requires governor controls to be set for ‘droop control mode’.

The frequency deadband implementation shown in Figure 8 is recommended by NERC and BPA. Figure 8 depicts the classic frequency vs active power droop characteristic shown in red with deadband shown in gray. Note that there is no “jump” in the response due to the deadband, as the values for Active Power are equal at the upper and lower borders of the deadband.

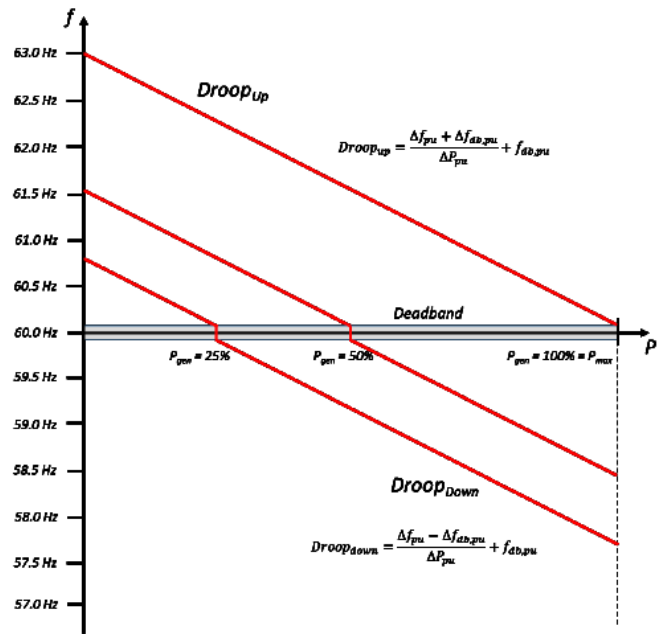

Figure 8.--- Frequency Response from NERC IBR Guidelines

6.4.7 *Generator Operation during Emergency System Conditions*

The generator, when requested by the BPA Dispatcher during emergency conditions, will be expected to supply reactive power up to its maximum available capability, even if reductions to generation levels are required. Dispatch for non-synchronous sources will be examined on a case-by-case basis, depending upon the performance characteristics of the source and its location within the BPA grid.

VERs (Variable Energy Resources), such as wind, solar, and tidal generation, are inherently difficult to forecast. Therefore, all VERs with a nameplate capacity >3MW or who market their output (submit eTags) within the BPA BAA are required to participate in BPA's Operational Controls for Balancing Reserves (OCBR). These are automated dispatch controls designed to limit over-generation and to cut schedules for under-generation when BPA approaches its Balancing Reserves limit.

The BPA Dispatcher will issue automated Dispatch instructions to the VER project operator during those times when generation output must be limited, and the project operator will be responsible to limit total plant output to the limit issued by BPA Dispatch. See Sections 10 and 12 for more details on telecommunications requirements for VER projects.

6.4.8 *Blackstart Capability & Blackstart Resources*

If BPA determines that a generating source needs to be blackstart capable, this will be addressed in the interconnection study and planning review process. In general, interconnected sources do not need to be a Blackstart Resource, since BPA has already identified those Resources in the BPA Restoration Plan.

6.4.9 *Surplus Interconnection Service*

FERC Order 845 created a new provision for "Surplus Interconnection Service" in the LGIP. Surplus Interconnection permits requesters to improve the real power capacity factor by "over-building" total plant generating capability in excess of the MW reliability limit at the existing POI. Simultaneous generation output behind the POI is not permitted to exceed the MW limit of the POI at any time, as determined by BPA studies or existing Interconnection Agreements.

BPA expects the primary plant real power controller or plant dispatchers will ensure the POI MW limit is obeyed at all times. BPA also requires all generation with installed MW capacity larger than the POI limit shall install backup automatic controls or directional relaying to ensure total simultaneous real power delivered to the POI does not exceed the MW reliability limit of the POI. The controls & power relays shall at least ensure the plant will immediately ramp down if total POI generation output exceeds 102% of the POI MW limit for more than the shorter of: 30 seconds or 2 control cycles of the plant's primary MW controller. BPA Dispatch has the authority to disconnect the entire Plant at the POI if/when the stated limits are exceeded. Reconnection of the generation will not be granted until the reasons for failed control are communicated or test evidence of corrections is provided.

6.4.10 *Energy Storage*

Energy storage projects may be subject to additional requirements due to the bidirectional nature of the resource. All energy storage will be subject to the following requirements:

- The energy storage project will be required to provide telemetry on the energy storage component's state of charge and whether it is in charging/pumping mode or in discharging/generating mode.
- The energy storage project, during emergency conditions, should have the capability to ramp down from discharging full output to zero output to full charging input and vice versa while remaining connected to the system.
- The energy storage project is required to have the ability to receive a RAS signal to take appropriate RAS actions to ramp or trip or trip in discrete steps when required. The plant controller that receives and takes the appropriate RAS action should be fully redundant to eliminate a single point of failure inside the plant controller.
- The energy storage project shall be able to perform sequential trip to trip off part(s) of the project in increments if applicable.

6.5 Large Computational Load (LCL) Ride-Through Requirements

6.5.1 *Frequency Ride-Through for LCL*

1. A Customer that proposes to interconnect or maintains an interconnection of a Large Computational Load (LCL) shall ensure the LCL complies with the frequency ride-through requirements of this section.

2. A LCL shall ride through frequency disturbances of the magnitude and duration specified in Table 1 below, as measured at the Point of Interconnection (POI). A LCL is not required to ride-through if it is either performing in accordance with an

Under-Frequency Load Shed (UFLS) program, a Remedial Action Scheme (RAS) or providing an Ancillary Service that would require the LCL to trip or reduce consumption due to a frequency disturbance.

Table 1. – Frequency Ride-Through for LLC

Frequency (f) in (Hz)	Minimum Ride-Through Time (seconds)
f > 63	May ride-through or trip
61.2 < f ≤ 63	299
58.8 ≤ f ≤ 61.2	continuous
57.5 ≤ f < 58.8	299
f < 57.5	May ride-through or trip

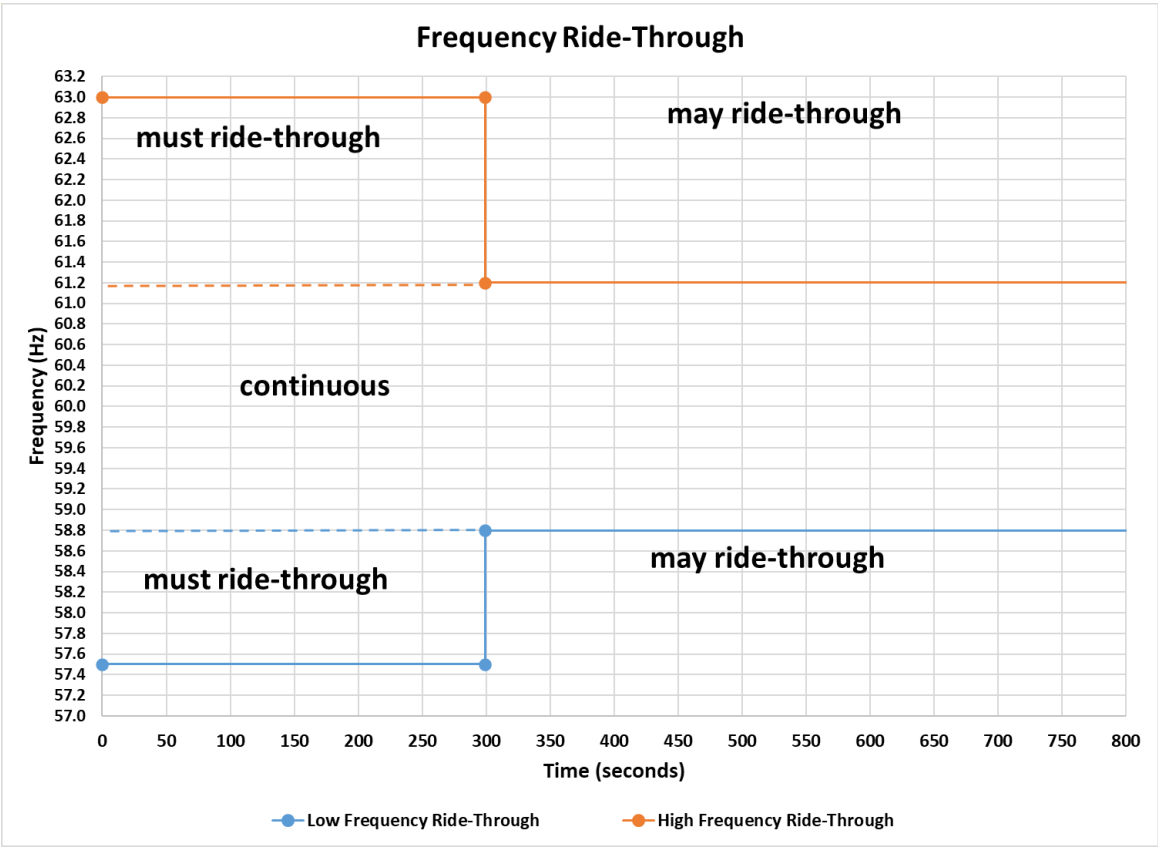

Figure 9.---Frequency Ride-Through

3. Nothing in paragraph (2) above shall be interpreted to require a LCL to trip or transfer load to backup generation for frequency conditions beyond those for which ride-through is required.

4. If a LCL is consuming electric current from the grid at the time of the frequency disturbance, the LCL shall continue to consume electric current from the grid during frequency deviations requiring ride-through. In addition, a LCL should continue to consume active power within 10% of the pre-disturbance level during frequency deviations requiring ride-through.

5. For frequency deviations outside the continuous operating range, specified in Table 1, a LCL may implement an internal load-transfer or control-stabilization scheme such that the LCL facility returns to at least 90% of its pre-disturbance consumption level, as measured from the LCL's POI, within two seconds once frequency returns to the continuous operating range. For LCLs composed of multiple internal devices, one load-transfer or control action per disturbance event per individual device shall be permitted.
6. If protection systems are installed and activated to trip the LCL, they shall enable the LCL to ride-through frequency conditions beyond those defined in Table 1 to the maximum level the equipment allows, unless the protection systems are set to respond to a UFLS, RAS, or Ancillary Service obligation.
7. If frequency protection schemes are installed and activated to trip a LCL, they shall use filtered quantities or add sufficient time delays to prevent mis-operations while providing the desired equipment protection. Protection schemes shall not trip a LCL based on an instantaneous frequency measurement.
8. A LCL shall withstand a rate of change of frequency (RoCoF) equal to or less than 5 Hz per second, measured and calculated over a 0.5 second window.
9. A LCL shall withstand voltage phase angle jumps equal to or less than 25 degrees, positive or negative change.
10. Frequency shall be measured over a 3-6 cycle (0.05 to 0.1 second) rolling window.
11. If BPA determines that an LCL has failed to ride through a frequency disturbance in accordance with any requirement herein.
    a) The interconnecting Customer shall provide available information to BPA to assist with event analysis
    b) The Customer representing the LCL shall:
        i. Investigate and determine the root cause of the frequency ride-through failure and report the results of the investigation to BPA within 90 days of BPA's request
        ii. Develop a plan to ensure the LCL can meet the applicable ride-through performance requirements and submit the plan to BPA within 90 days of completion of (i) above; and
        iii. Implement the plan upon BPA approval within 180 days of (ii) above unless BPA approves a longer timeline.
    c) Notwithstanding the requirements of paragraph (b) above, if BPA determines that the operation of a LCL following a failure to comply with the requirements poses an imminent risk to local or system reliability, BPA may require the LCL to disconnect and remain disconnected until the Customer representing the LCL has demonstrated to BPA's satisfaction that the LCL can comply with the ride-through performance requirements of this section.

6.5.2 *Voltage Ride-Through Requirements for LCL*

1. A Customer that proposes to interconnect or maintains an interconnection of a Large Computational Load (LCL) with the BPA System shall ensure the LCL complies with the voltage ride-through requirements of this section.

2. A LCL interconnecting with the BPA System shall ride through the root-mean-square, line-to-line voltage conditions of the magnitude and duration specified in Table 2 below, as measured at the LCL's Point of Interconnection (POI). A LCL shall remain connected to the Transmission Grid during voltage conditions requiring ride-through. Additional LCL performance requirements for voltage conditions requiring ride-through are listed below. Cooling or mechanical load at the LCL facility may ride through or trip when voltage conditions are below 0.35 p.u. for any duration. For purposes of determining compliance with this requirement, if any cooling or mechanical load at a LCL facility were to trip for voltage conditions below 0.35 p.u. at the POI, that amount of pre-disturbance load tripped would be subtracted from the total pre-disturbance consumption to determine the pre-disturbance load return requirements described below.

   a) When voltage at the POI remains within the continuous operating range in Table 2 during a disturbance or exceeds 1.1 per unit and remains below 1.2 per unit for less than 1.0 second for an overvoltage condition, the LCL shall continue consuming active power from the grid at the pre-disturbance level during the disturbance.

   b) When voltage at the POI falls below 0.9 per unit but remains above 0.8 per unit and then returns to above 0.9 per unit within 2 seconds, the LCL shall continue consuming active power from the grid during the low voltage condition. In such cases, the LCL may reduce its active power consumption proportional to the voltage drop but shall return to 90% of its pre-disturbance consumption level from the grid within two seconds of voltage at the POI returning to above 0.9 per unit.

   c) For voltage at the POI, that a LCL is required to ride-through, less than 0.8 and equal to or greater than 0.5 per unit the LCL shall continue consuming active power from the grid but may temporarily reduce active power consumption from the grid proportional to the voltage drop. When the voltage at the POI is below 0.5 per unit, the LCL may reduce active power consumption as needed to allow the facility to ride through the voltage disturbance. The LCL shall return to 90% of its pre-disturbance consumption level from the grid within two seconds of voltage at the POI returning to above 0.9 per unit. A LCL that cannot continue consuming active power as described in the previous three sentences may implement a load-transfer scheme in accordance with paragraph (e) below.

   d) When a voltage disturbance causes the voltage at the POI to drop below the continuous operating range in Table 2, a LCL shall not consume electric current from the grid during the disturbance at a level that exceeds 120% of its maximum electric current consumption during normal operations. The

allowable overcurrent up to 120% shall only persist during the transient voltage with a duration not to exceed 0.5 seconds.

e) For undervoltage deviations below 0.8 p.u., an LCL may implement load-transfer or control stabilization scheme such that the LCL facility begins returning to the grid within 0.25 seconds of the voltage at the POI returning to above 0.9 p.u. and shall return to at least 90% of its pre-disturbance consumption level within 0.5 seconds of voltage returning to above 0.9 p.u., as measured from the LCL's POI. For LCLs composed of multiple internal devices, one load-transfer or control action per disturbance event per individual device shall be permitted.

Table 2.— Voltage Ride-Through Requirements for LCL

Root-Mean-Square, Line-to-Line, Voltage (p.u. of nominal)	Minimum Ride-Through Time (seconds)
V > 1.20	May ride-through or trip
1.10 < V ≤ 1.20	1.0
0.90 ≤ V ≤ 1.10	Continuous
0.80 ≤ V < 0.90	2.0
0.50 ≤ V < 0.80	0.5
0.35 ≤ V < 0.50	0.25
V < 0.35	0.15

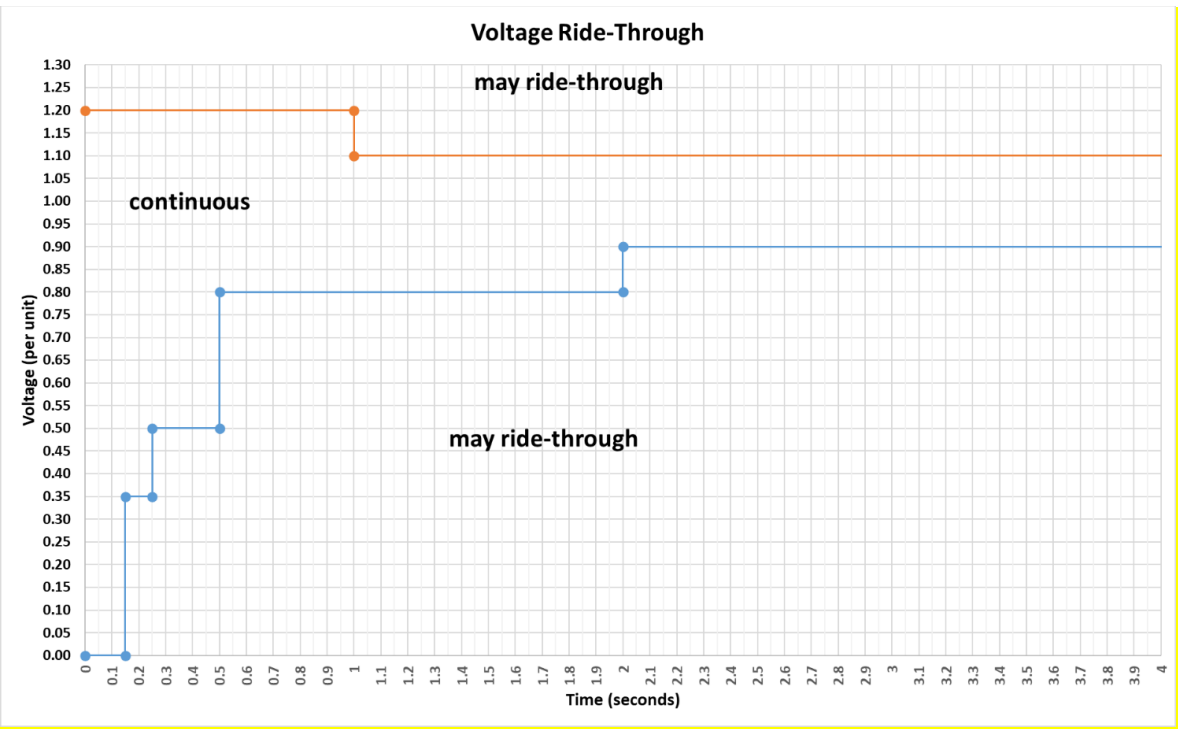

Figure 10.---Voltage Ride-Through

1. Nothing in paragraph (2) above shall be interpreted to require an LCL to trip or transfer load to backup generation for voltage conditions beyond those for which ride-through is required.

2. If installed and activated to trip or transfer the LCL, all protection systems (including but not limited to protection for over-/under-voltage) shall enable the LCL to ride-through voltage conditions beyond those defined in Table 2 to the maximum level the equipment allows.
3. If instantaneous over-current or over-voltage protection systems are installed and activated to trip or transfer the LCL, they shall use filtered quantities or time delays to prevent mis-operation while providing the desired equipment protection. Any alternating current instantaneous over-voltage protection that could disrupt the LCL power consumption shall use a measurement window of at least one cycle of fundamental frequency (0.01667 seconds)
4. A LCL shall not implement a load trip or transfer scheme that disconnects or transfers load to backup generation due solely to a certain number of voltage sags or swells within a certain period if the LCL is required under paragraph (2) above to ride through each such condition. If such a load trip or transfer scheme must be activated due to limitations of the equipment, the LCL must be capable of remaining connected to the system for a minimum of six voltage sags or swells within a 90-second period.
5. If BPA determines that an LCL has failed to ride through a voltage disturbance in accordance with any requirement:
   a) The interconnecting Customer shall provide available information to BPA to assist with BPA's event analysis;
   b) The Customer representing the LCL shall:
      i. Investigate and determine the root cause of the voltage ride-through failure and report the results of the investigation to BPA within 90 days of BPA's request;
      ii. Develop a plan to ensure the LCL can meet the applicable ride-through performance requirements and submit the plan to BPA within 90 days of completion of (i) above; and
      iii. Implement the plan upon BPA approval within 180 days of (ii) above unless BPA approves a longer timeline.
   c) Notwithstanding the requirements of paragraph (b) above, if BPA determines that the operation of a LCL following a failure to comply with the requirements poses an imminent risk to local or system reliability, BPA may require the LCL to disconnect from the System and remain disconnected until the Customer representing the LCL has demonstrated to BPA's satisfaction that the LCL can comply with the ride-through performance requirements.

6.5.3 *Oscillation Prevention Requirement for LCL*

A LCL has the responsibility to not create forced oscillations on the power system and if detected corrective actions are required.

6.6 System Stability and Reliability

The BPA Grid has been developed with careful consideration for system stability and reliability during disturbances. The type of connection, size of the source or load, breaker configurations, source or load characteristics, and the ability to set protective relays will affect where and how the connection is made. For most generators and some loads, the Requester will also be required to participate in Remedial Action Schemes (RAS) including automatic tripping of generation or load. Section 9.1.5 provides additional information and requirements for RAS schemes.

6.6.1 *Key Reliability and Availability Considerations*

- The new connection shall meet all applicable IEEE, WPP, NERC and WECC operating and reliability criteria requirements. When in conflict, the more restrictive requirement shall apply.
- Tools and spare equipment must be readily available to accomplish operations and maintenance tasks.
- Bypass equipment must be fully rated to allow continued operation without creating a bottleneck. Alternate feeds, when provided, shall have sufficient rating to not restrict operation of the BPA Grid.
- Shielding and electromagnetic interference (EMI) protection shall be provided to ensure personnel safety and proper equipment functioning during disturbances such as faults and transients.
- Standardized design, planning, operating practices and procedures should be used so the new connection may be readily incorporated into the existing transmission network.
- For reliable operation, the telecommunications, control and protection equipment must be redundant to the extent described in Sections 10 and 11.
- The equipment for the new connection shall have sufficient capabilities for both the initial operation and for long-range plans.
- Operations and maintenance personnel must be properly trained for both normal and emergency conditions

6.6.2 *Atmospheric and Seismic*

The effects of windstorms, floods, lightning, elevation, temperature extremes, icing, contamination and earthquakes must be considered in the design and operation of the connected facilities. The Requester is responsible to determine that the appropriate standards, codes, criteria, recommended practices, guides and prudent utility practices are met for equipment it furnishes and installs.

6.6.3 *Physical Security*

The potential vulnerability of the facility to sabotage or terrorist threat must be factored into the design and operating procedures. The Requester is responsible to determine that the appropriate standards, codes, criteria, recommended practices, guides and prudent utility practices are met for its installation.

BPA facilities have specific requirements for physical security and will adopt a minimum security baseline for retrofitted and newly designed and constructed substations and facilities. These requirements are based on the NERC Critical Infrastructure Protection

(CIP) Standards, DOE Design Basis Threat (DBT) (DOE O 470.3C), BPA Policy 432-1 Safeguards and Security Program, the Department of Homeland Security Presidential Directive 12 (HSPD-12), Physical Security Requirements for NERC CIP Critical Asset Sites, and Physical Access Control and Monitoring System Design and Installation Requirements among other sources. The required security measures will align with the existing standards for sites with medium impact rated systems with external routable connectivity (ERC).

6.6.4 *Transmission and Substation Facilities*

Some new connections to the BPA Grid require that one or more BPA lines (a transmission path) be looped through the Requester's facilities or sectionalized with the addition of switches. The design and ratings of these facilities shall not restrict the capability of the line(s) and BPA's contractual transmission path rights. Customer owned transmission lines that interconnect with BPA facilities shall meet the requirements specified herein at the POI and where specified to maintain worker safety and electrical protective margins.

6.6.5 *Insulation Coordination*

Power system equipment is designed to withstand voltage stresses associated with expected operation. Adding or connecting new facilities can change equipment duty, and may require that equipment be replaced or switchgear, telecommunications, shielding, grounding and/or surge protection be added to control voltage stress to acceptable levels. Interconnection studies include the evaluation of the impact on equipment insulation coordination. BPA may identify additional requirements to maintain an acceptable level of BPA Grid availability, reliability, equipment insulation margins and safety. Voltage stresses, such as lightning or switching surges, and temporary overvoltages may affect equipment duty. Remedies depend on the equipment capability and the type and magnitude of the stress. In general, stations with equipment operated at 15 kV and above, as well as all transformers and reactors, shall be protected against lightning and switching surges. Lightning protection will include substation shield wire (overhead ground wire/OHGW) against direct lightning strokes, surge arresters on all line terminals, transformers, reactors, shunt capacitors and station entrance shielding, incoming transmission line shielding, with OHGW.

Table 3.— BPA Minimum Standard Lightning Impulse (BIL) Insulation Levels

Nominal Voltage (kV)	BIL (kV)	NOTES
535	1800, 1550	1800 kV BIL is used for Eastern AC Intertie facilities or where contamination, reliability require it. Otherwise 1550 kV and match existing construction
345	1550, 1300	Legacy facilities may have 1550 kV BIL – use the same unless significant rebuild can ensure that isolating devices do not have lower BIL than bus supports
230	900	
161	750	Legacy facilities may have 650 kV BIL
138	650	Legacy facilities may have 550 kV BIL
115	550	Legacy facilities may have 450 kV BIL
69	350	

6.6.6 *Temporary Overvoltages*

Temporary overvoltages can last from seconds to minutes and are not characterized as transient overvoltage produced by lightning or switching surges. Although BPA follows ANSI C84.1 for nominal and maximum system operating procedures such that voltage control practices do not normally cause temporary overvoltage, temporary overvoltages may be present during conditions such as, but not limited to, islanding, faults, loss of load, or long-line situations. All new and existing equipment must be capable of withstanding temporary overvoltage, as defined by BPA specific to the interconnection request.

6.6.7 *Ancillary Services*

All new connections to the BPA Grid require an interconnection agreement. The interconnection agreement does not imply or guarantee transmission service or ancillary services.

All loads and transmission facilities must be part of a balancing authority area. The balancing authority area provides critical ancillary services, including load regulation, and frequency response, operating reserves, voltage control from generating resources, scheduling, system controls and dispatching service, as defined by FERC, or their successors. A transmission contract is optional. The requester must choose the balancing authority area in which the new facilities will be located and the source or provider of ancillary services. This election should be identified in the ancillary service exhibit of the transmission contract. If the requester chooses a balancing authority area other than BPA, they are required to provide a signed formal attestation from the balancing authority area owner that the requester has made the appropriate provisions to operate within the Affected Systems balancing authority area.

Of particular importance is the Requester's selection of the source for regulating and contingency reserves, if needed. BPA will then determine the telemetering, controls, and metering that will be required to integrate the load or facility into the chosen balancing authority area and to provide the necessary ancillary services. If the Requester chooses a self-provision or a third-party provision of reserves, then special certification and deployment procedures must be incorporated into the BPA automatic generation control (AGC) system. The provision of the required ancillary services must meet all relevant NERC, WECC and WPP reliability policies and criteria.

The generator is required to operate in automatic voltage control mode, regulating the voltage to a BPA provided voltage schedule. Typically, the generator should supply reactive power for its station service loads and reactive power losses up to the POI. Generator projects may be requested to supply reactive power as an ancillary service.

Normally, the generator will operate its governor to respond independently for frequency deviations. If the governor is controlled through the plant central controller, the governor shall be in 'droop control' mode. Droop setting and performance shall comply with applicable NERC and WECC reliability standards and guidelines.

6.6.8 *Power Quality*

Power quality is the responsibility of both the end users (loads and generation) connected to a utility system and the utilities providing distribution and transmission. Since this document focuses on the interconnection of loads and generation to the BPA Grid, this section will deal primarily with power quality problems typically introduced by the end user or Requester as termed in this document. The Requester is expected to address, in the design of their facilities, potential sources and mitigation of power quality degradation prior to interconnection. Design considerations should include applicable standards including, but not limited to IEEE Standards 142, 519, 1100, 1159, 1547, IEC 61000-3, 61000-4 and ANSI C84.1.

In general, the Requester has the responsibility not to degrade the voltage of the utility (BPA) serving other users by requiring nonlinear currents from the system. The Requester also has certain responsibilities to account for transmission system events such as switching transients and fault-induced voltage sags. Standards exist for manufacturers and system designers to take into account short duration system events in order to design equipment or systems with sensitivities capable of riding through events that are within utility system operating standards. If it is determined that the new connection facility is causing a power quality problem, then the Requester will be held responsible for installation of the necessary equipment or operational measures to mitigate the problem. Typical forms of power quality degradation include, but are not limited to voltage regulation/unbalance, harmonic distortion, flicker, voltage sags/interruptions, and transients. Some of the more common forms of degradation are discussed below.

6.6.8.1 Oscillations

The Requester has the responsibility to not create excessive oscillations on the power system. BPA monitors the Western Interconnection's natural oscillations using a Mode Meter Monitor application, and if it is determined that the generating source is stimulating those oscillations to an alarm condition, if there is time, a system Dispatcher will contact the generator facility and ask if there are any abnormal conditions being observed at the facility such as site testing or control function changes. If the oscillation continues without resolution, BPA Dispatch has the authority to disconnect the generating source.

6.6.8.2 Voltage Fluctuations and Flicker

Voltage fluctuations may be noticeable as visual lighting variations (flicker) and can damage or disrupt the operation of electronic equipment. IEEE Standard 519 and IEC 61000-3 provides definitions and limits on acceptable levels of voltage fluctuation. Loads or system connections to the BPA Grid shall comply with the limits in these standards.

6.6.8.3 Harmonic Distortion

Nonlinear devices such as adjustable or variable speed drives (ASD/VSD), power converters, arc furnaces, and saturated transformers can generate harmonic voltages and currents on the transmission system. These harmonics can cause telecommunication interference, increase thermal heating in transformers and reactors,

disable or cause misoperations of solid-state equipment and create resonant overvoltages. In order to protect power system equipment from damage or misoperations, harmonics must be managed and mitigated. The new connection shall not introduce harmonics into the BPA Grid in excess of the limits specified in IEEE 519.

In addition to loads with nonlinear devices, new generation resources or distributed resources should be evaluated not only for possible injected harmonics, but also for potential resonant conditions. For example, some generation resources, whether due to power factor correction capacitors or cable capacitances, may be capacitive during certain operating configurations. These types of configurations may result in resonant conditions within the project or in combination with the utility system. The short circuit ratio (SCR) tests as listed in IEEE 1547 and IEEE 519 can be good indicators of this potential problem. If the evaluation of the new connection indicates potential harmonic resonance the requester may be required to filter, detune, or mitigate in some way the potential resonant conditions associated with connection of the new resource.

For individual end users, the IEEE 519 limits the level of harmonic currents injected at the POI (listed in IEEE literature as the Point of Common Coupling (PCC)) between the end user and the utility. Recommended limits are provided for individual harmonic components and for the total demand distortion. These limits are expressed as a percentage of the customer's demand current level, rather than as a percentage of the fundamental, in order to provide a basis for evaluation over time. There are also limits for voltage distortion for both individual frequency and total harmonic distortion.

6.6.8.4 Phase Unbalance

Unbalanced phase voltages and currents can affect coordination of protective relaying, create higher flows of current in neutral conductors, and cause thermal overloading of transformers and motors. The measurement of voltage unbalance, Negative Sequence Unbalance Factor (NSUF), is the ratio of the negative sequence voltage divided by the positive sequence voltage expressed as a percentage. The NSUF limits listed herein applies to normal system operations (no significant transmission outages). For connections at 230 kV and above, the voltage unbalance should not exceed 1%. For connections below 230 kV, the contribution at the POI from a single interconnection should not be allowed to cause a voltage unbalance greater than 1.3%. The voltage unbalance limit is 2% at Points of Common Coupling for the aggregate effect of multiple loads.

System problems such as a blown transformer fuse or open conductor on a transmission system can result in extended periods of phase unbalance. It is the Requester's responsibility to protect all of its connected equipment from damage that could result from such an unbalanced condition.

7. SUBSTATION FACILITY & HIGH VOLTAGE EQUIPMENT REQUIREMENTS

7.1 General Equipment Considerations

7.1.1 *Minimizing Disturbances*

The new facilities shall be designed, constructed, operated, and maintained in conformance with this document, applicable laws and regulations, and standards to minimize the impact of the following:

- Electric disturbances that produce abnormal power flows
- Power-system faults or equipment failures
- Overvoltages during lightning, switching and ground faults
- Audible noise, radio, television, and telephone interference
- Power-system harmonics
- Other disturbances that might degrade the reliability of the interconnected BPA Grid

7.1.2 *Existing Equipment*

The proposed new connection may force existing equipment such as transformers, power circuit breakers, disconnect switches, arresters, and transmission lines outside their ratings. New connections will require equipment replacement or an alternate plan of service under such a scenario.

7.1.3 *Safety and Isolating Devices*

A disconnect switch is required at any interconnection to the BPA Grid in order to provide physical and visible isolation between the BPA Grid and the connected facilities. The isolation device may be placed in a location other than the Point of Interconnection (POI), by agreement of BPA and affected parties. Safety and operating procedures for the isolating device shall be in compliance with the BPA Accident Prevention Manual (APM) and the Requester's and interconnecting utility's safety manuals. All switchgear that could energize equipment shall be visibly identified, so that all maintenance crews can be made aware of the potential hazards. Isolating devices on transmission lines or within substations that may be used for electrical clearance boundaries or maintenance purposes shall meet the "visible air gap" requirement in the BPA APM. The following requirements apply for all such isolating devices:

- Must simultaneously open all three phases (gang operated).
- Must be accessible by BPA.
- Must be lockable in the open position by BPA.
- Shall not be operated without advance notice to affected parties and approval of the clearance holder and BPA Dispatch, unless an emergency condition requires that the device be opened to isolate the connected facilities.
- Must be suitable for safe operation under all foreseeable operating conditions.

All work practices involving equipment owned, maintained, and/or operated by BPA must be done in accordance with the principles contained in the BPA APM, the BPA Work Standards, and performed at the direction of BPA Dispatchers. BPA personnel may lock the isolating device in the open position and install safety grounds under these conditions:

- As a clearance boundary for the protection of maintenance personnel when working on de-energized circuits.
- If the connected facilities or BPA equipment presents a hazardous condition or jeopardize the operation of the BPA Grid.

7.1.4 *Configuration for Sectionalizing and Maintenance*

The configuration of interconnected facilities shall provide sufficient flexibility to allow isolation of each transmission line or line section, and each circuit breaker and other key equipment, for both operation and maintenance purposes.

7.2 BPA Substation Requirements

Substations owned or maintained by BPA as well as BPA-equipment installations within foreign-owned substations shall be designed to meet all the following requirements:

- BPA Reliability Criteria, Design Standards, and Accident Prevention Manual (APM)
- National Electrical Safety Code (NESC) C2 and OSHA.
- BPA's Minimum Approach Distances as specified in the APM and "Preferred" spacing for phase-to-phase and phase-to-ground distances consistent with BPA Substation Design Standards.
- Substation line terminals shall include OHGW as defined in Section 6.6.
- All substation layouts and expansions will provide adequate space and distances to property lines to meet BPA requirements for noise control per STD-D-000010, "Audible Noise Policy".
- Substations shall include direct-stroke lightning shielding consistent with BPA Substation Design Standards.
- All substation line terminals shall incorporate surge protection on the line side with metal oxide surge arresters (MOSA) and will be coordinated with the existing substation and equipment insulation levels. This includes all lines or cables entering a BPA substation and connecting directly to BPA substation equipment.

7.3 Customer Built Substations and Facilities

When BPA allows a customer-built substation to bisect an existing BPA transmission line, the customer-built facilities shall not be the line rating limiting factor. The customer facilities must match or exceed the existing BPA line capability and meet or exceed the requirements of the BPA reliability criteria.

7.4 Switchgear

7.4.1 *General Requirements*

Circuit breakers, disconnect switches, circuit switchers, load break disconnects and all other equipment connected to BPA's transmission facilities shall be capable of carrying both normal, system swing and emergency rating load currents, and must also withstand projected fault currents without damage. This equipment shall not become a limiting factor ("bottleneck"), in the ability to transfer power on the BPA Grid. During prolonged steady-state operation, all such equipment shall be capable of carrying the maximum continuous current that the interconnected facility can reasonably deliver.

All circuit breakers and other fault-interrupting devices shall be capable of safely interrupting fault currents for any fault that they may be required to interrupt. Application shall be in accordance with ANSI/IEEE C37 Standards. These requirements apply to the equipment at the POI as well as other locations on the BPA Grid. BPA will provide the projected bus single/three phase fault currents and X/R ratios. This data can then be used to size the symmetric and momentary ratings of switching devices. To account for system expansion a 25-33% rating margin is suggested.

The connection of a transmission line or load can coincidentally include other generating resources. When this system configuration is connected to the low-voltage side of a Δ-YG transformer, the high-voltage side may become ungrounded when remote-end breakers open, resulting in high phase-to-ground voltages. This neutral shift phenomenon is described in Section 7.5.3. Switchgear on the high side of a Δ-YG transformer that interrupt faults or load must be capable of withstanding increased recovery voltages.

Circuit breakers shall be capable of performing other duties as required for specific applications. These duties may include capacitive or inductive current switching, and out-of-step switching. BPA may require Independent-Pole Operation and associated IPO Point on Wave controls for some shunt-capacitor and shunt-reactor switching applications. Circuit breakers shall perform all required duties without creating transient overvoltages that could damage BPA equipment.

Generally, circuit breakers for transmission lines are required to provide automatic high-speed reclosing, with reclose times ranging from 0.333 to 2 seconds (20 to 120 cycles). Circuit breakers for 500 kV lines will also typically be required to perform single-pole switching. 500 kV breakers without resistors on transmission lines will use staggered three-pole closing, where each phase closes sequentially about 16 ms (one cycle) apart.

7.4.2 *Circuit Breaker Operating Times*

Table 4 specifies the interrupting times typically required of circuit breakers on the BPA Grid. These times will generally apply to equipment at or near the POI. System-stability considerations may require faster opening times than those listed. Breaker-close times are typically three to eight cycles. Circuit-breaker interrupting time may vary from those in Table 4 but must coordinate with other circuit breakers and protective devices.

Table 4.—Typical Circuit Breaker Interrupting Times

Voltage Class (kV L-L rms)	Rate Interrupting Time (Cycles)
Below 100 kV	≤ 8
100 kV to 138 kV	≤ 5
161 kV to 230 kV	≤ 3
287 kV to 345 kV	≤ 2
500 kV	≤ 2

7.4.3 *Other Fault-Interrupting Devices*

Depending on the application, the use of other fault-interrupting devices such as circuit switchers may be allowed. Trip times of these devices are generally slower, and current-interrupting capabilities are often lower, than those of circuit breakers. These

devices must have been tested for the duty in which they are to be applied and they must coordinate with other protective devices operating times. To avoid 'single phasing' of low-side connected systems, BPA does not permit use of fuses on interconnecting equipment. Only exception is for small existing transformer banks, see BPA STD-DC-000032, "Fuse Sizing Policy for Category II and III Power Transformers".

7.4.4 *Transformers, Shunt Reactance and Phase Shifters*

Transformer tap settings (including those available for under-load and no-load tap changers), reactive control set points of shunt-reactive equipment, and phase shift angles for phase shifters must be coordinated with BPA to optimize real and reactive flows as well as voltage profiles. Automatic controls may be necessary to maintain these profiles on the interconnected system. Timed changes should be coordinated with time schedules established by the WPP.

Transformer reactance and tap settings for generator transformers should also be coordinated with BPA to optimize the reactive power capability (lagging and leading) that can be provided to the network. Refer to IEEE C57.116, Guide for Transformers Directly Connected to Generators. The continuous reactive-power capability of the generator shall not be restricted by main or auxiliary equipment, control and protection, or operating procedures.

7.5 Transformer Considerations

7.5.1 *New Installations*

The BPA transmission system typically uses autotransformers to change transmission-level voltages (e.g. 500-230 kV, 230-115 kV), where the voltages on each side are in phase. Some 69-kV and most lower-voltage circuits (34.5 kV and below) will incorporate a Δ-Y, or 30 degree phase shift from the higher transmission voltages. Interconnection requests, particularly involving transformers, need to consider the phase relationship between the BPA transmission voltages and the Requester's desired or existing system voltages.

Transformers connecting to the transmission system where a source of real power flows through the transformer to the BPA high-voltage transmission system shall provide a ground source of current on the high voltage side. A YG-Δ or a YG-Δ-YG transformer with the Y-ground connection on the high-voltage side can accomplish this. A YG-YG connection is only appropriate if there is a sufficient ground source on the low-voltage side and will need to be evaluated by BPA before being permitted. New Δ-YG transformers with the delta connection on the high side are only permitted on radial (feeder) systems with no power flow into the BPA high-voltage transmission system.

For generator interconnections where a low-impedance ground source is also desired on the generator side of the transformer, such as for a connection to a wind farm, the most typical transformer configuration is YG-Δ-YG (e.g. 230–34.5 kV). Where low-impedance grounding is not desired on the generator side, the typical configuration is YG-Δ (e.g. 230-23 kV), with the Δ connection on the generator side.

Some substations on the BPA transmission system have very high ground fault levels. Interconnection at or near these substations naturally increases these levels and the

additional ground source on the high voltage side increases them further. BPA may place special requirements on the connection transformer to increase the high-side grounding impedance. This will be done to decrease the ground-fault contribution of the interconnection while still maintaining acceptable high-side grounding. These requirements are determined on a case-by-case basis.

The additional ground-fault current source created by a new transformer can also significantly alter the distribution of ground-fault current among all ground sources in the area. This can create problems with the relay coordination in the area, in some cases making proper coordination unobtainable. The problem is compounded if the transformer may be switched off line frequently because the ground-fault current distribution may be drastically different when the transformer is on line as compared to when it is off line. The problem becomes worse as additional transformers are added in the area, as can happen in areas favorable to wind or solar generation as additional generation plants are added over time. BPA may require the transformer high-side neutral connection to be fully insulated so that grounding impedance can be added to limit the contribution of ground-fault current from the transformer while maintaining acceptable high-side grounding. This also allows for the possibility of operating the transformer with the high-side neutral ungrounded should that become necessary. The proper impedance to be added to the transformer neutral to allow proper relay coordination will be determined by BPA on a case-by-case basis.

7.5.2 *Existing Installations*

Generation or transmission connections to existing Δ-YG transformers used to serve load may require additional system equipment, such as a grounding bank, to provide adequate protection against ungrounded-system operation. Relay protection schemes may also be required to ensure immediate disconnection of the power source following disconnection of the transmission-system components. BPA will consider these on a case-by-case basis only.

7.5.2.1 Radial 500-230 kV Transformer Installations for Generation

To meet demand for several renewable generation projects to interconnect in the same proximity in the most efficient manner possible, a radial 500-230 kV plan of service may be recommended by Transmission Planning. A position in the 500 kV yard of a new or existing BPA substation may include for example a 1300 MVA transformer bank (3 x 433 MVA 525-230-34.5 kV single phase auto-transformer units) with a spare 433 MVA phase to provide for interconnections at 230 kV. A spare transformer phase is required to minimize outage times if a transformer failure occurs and provides maintenance flexibility.

In general, bulk transfers delivering generation to load centers occur across the 500 kV main-grid transmission system. A radial 500-230 kV transformer (Hub) connection to the 500 kV system reduces the cumulative effects of large number of individual generation projects connecting to the 230 kV system in the area and reduces associated mitigations for reliability issues. This plan of service injects the generation directly into the 500 kV main grid system, avoiding 230 kV system expansion and reinforcements needed to deliver the generation to the main grid. Potential overloads

are limited and easier to manage across the 500 kV system. Transmission Planning will decide which plan of service is warranted based on system conditions in the area of the requested generation interconnections and the number of requests anticipated in the area.

7.5.3 *Neutral Shifts*

When generation is connected to the low-voltage, grounded-wye side of a delta-grounded wye (Δ – YG) transformer, opening the high-voltage connection due to fault clearing may cause overvoltage on the high-voltage terminal. These high voltages can affect personnel safety and damage equipment. This type of overvoltage is commonly described as a neutral shift and can increase the voltage on the unfaulted phases to as high as 1.73 per unit. At this voltage, the equipment-insulation withstand duration can be very short. Several alternative remedies to avoid neutral shift and its potential problems are possible.

7.5.3.1 Effectively Grounded System

Utilize appropriate transformer connections on the high-voltage side to make the system 'effectively-grounded'. Effectively grounded is defined as a system with X0/X1 ratio less than or equal to 3.0, and R0/X1 ratio less than or equal to 1.0. Any of these methods can result in an effectively-grounded system that will minimize the risk of damage to surge arresters and other connected equipment. Methods available to obtain an effective ground on the high-voltage side of a transformer include the following:

- A transformer with the transmission voltage (BPA) side connected in a Wye-Ground (Y-G) configuration and low-voltage side in a closed Delta.
- A three-winding transformer with a closed-Delta tertiary winding and both the primary and secondary sides connected Y-G.
- Installation of a grounding transformer on the high-voltage side.

7.5.3.2 Increase Insulation Levels

Size the insulation of equipment connected to the transmission-line, high-voltage side so it can withstand the expected amplitude and duration of the neutral shift. This may include equipment at other locations.

7.5.3.3 High Speed Separation

Rapidly separate the back-feed source from the step-up transformer by tripping a breaker, using either remote-relay detection with pilot protection scheme (transfer trip) or local relay detection of the overvoltage condition.

7.6 Substation Grounding

Each substation must have a ground grid that is solidly connected to all metallic structures and other non-energized metallic equipment. This grid shall limit the ground potential gradients under both normal and fault conditions to such voltage and current levels that will not endanger the safety of people or damage equipment in, or immediately adjacent to, the station. The ground-grid size and type are in part based upon local soil conditions and available electrical fault-current magnitudes. Grounding rods are required component of all ground grid designs. In areas where ground-grid

voltage will rise beyond acceptable and safe limits (for example due to high soil resistivity or limited substation space), grounding wells may be required to decrease the ground-grid resistance to acceptable levels.

If a new ground grid is close to another substation, the two ground grids may be isolated or connected. If the ground grids are isolated, then no metallic ground connections are allowed between the two substation ground grids. Cable shields, cable sheaths, station service ground sheaths and overhead transmission shield wires can all inadvertently connect the two ground grids. All-dielectric fiber-optic cables are highly preferable for providing telecommunications and control between two substations while maintaining ground-grid isolation. If the ground grids are to be interconnected, the interconnecting cables must have sufficient capacity to handle fault currents and minimize any ground-grid voltage rise difference between the substations. BPA must approve any connection to a BPA substation ground grid.

New interconnections of transmission lines and/or generation may substantially increase fault-current levels at nearby substations. Modifications to the ground grids of existing substations may be necessary to keep grid-voltage rise within safe levels. The connection study will determine if modifications are required and the estimated cost.

The ground grid shall be designed to applicable ANSI and IEEE Standards relating to safety in substation grounding and BPA STD-DS-000009, “Substation Grounding.”

7.7 Station Service

Power provided for local use at a substation or generation facility to operate lighting, heat and auxiliary equipment is termed “station service”. Alternate station service is a backup or alternate independent source of AC power, used in emergency situations or during maintenance when primary station service is unavailable.

Station-service power is the responsibility of the Requester. The station-service requirements of the new facilities, including voltage and reactive requirements, shall not impose operating restrictions on the BPA Grid beyond those specified in applicable NERC, WECC and WPP Reliability Criteria.

Appropriate providers of primary station service and alternate station service are determined during the interconnection study and planning process, including Project Requirements Diagram development and review. Generally, the local utility will be the preferred provider of primary station service unless it is unable to serve the load, or the required facilities are prohibitively expensive. Note that even if one source of station service is back fed via the BPA grid, the Requester must make commercial arrangements with the local utility for retail service.

The Requester must provide metering for primary station service and alternate station service, as specified by the metering section of this document or negotiate other acceptable arrangements.

If the Requester intends to schedule station-service energy to the Project, the Requester is responsible to make arrangements for TSIN registration, appropriate Source/Sink identification, commercial transmission service and scheduling. The

Requester shall contact the BPA Transmission Services Account Executive at least six months prior to the desired energization date.

7.8 STATCOM-Type Controllable Reactive Power Devices

Dynamic reactive devices such as a STATCOM typically have a temporary overload capability of 130%-160%. BPA studies have found that this overload capability can be used to reduce the size of the continuous rating in combination with switched capacitors. STATCOM devices inherently include capacitor control as part of the total reactive power system. As allowed by BPA studies, the total reactive power dynamic requirement can be provided as a combination of 50% fast-acting continuous STATCOM rating (with a known temporary overload capability, e.g. 160% for 3 seconds) and 50% switched shunt capacitors to provide the continuous reactive power requirement.

Voltage control shall include line droop to provide fast response for major system events while desensitizing for small changes in voltage. Intentional deadband or additional time delays in the voltage control are not permitted without concurrence by BPA.

All additional switched reactive power required to meet the total reactive power requirement at the POI shall be controlled by the STATCOM voltage controller. The controller will be the interface for BPA dispatch of Primary and Secondary reactive power control functions.

7.9 Higher Speed Switching of Shunt Capacitors

Shunt Capacitors are used to provide reactive support for asynchronous generation facilities. Once opened, they typically have a reinsertion delay (close-open-close) to control capacitor duty and allow discharging of any trapped charges. The time to discharge can be as little as 2 minutes, with 5 minutes preferred. Magnetic (wire-wound) potential transformers added to each capacitor section on the high voltage terminals can reduce the time to reinsert to only a few seconds. Planning studies will specify when potential transformers are required to improve system reliability. This may be especially useful for sub-grid applications that do not require dynamic equipment. On a case-by-case basis, implementing higher loss capacitor banks can also reduce switching time delay for reinsertion.

8. TRANSMISSION LINE REQUIREMENTS

All new transmission lines owned or maintained by BPA shall be designed to meet <u>all</u> current BPA design and maintenance standards, utilizing existing BPA standard cables, hardware, and structures. Transmission lines owned and maintained by customers for interconnection to BPA may utilize non-BPA standard cables, hardware, or structures. Coordinate with BPA design and Customer Service Engineering staff to determine applicable BPA standards appropriate for the interconnection scenario. See STD-N-000011, “Equipment Ownership Requirements,” for demarcation information. Some specific transmission line requirements include the following:

8.1 Right-of-Way (ROW) Width

BPA's ROW widths are based on maintaining horizontal clearances to buildings and other installations with the conductor displaced from rest by 6-psf (49 mph) wind pressure on bare conductor at 60° Fahrenheit (F) final sag. The ROW width of all new transmission lines owned or maintained by BPA shall be designed to meet BPA Standard STD-DT-000062, "ROW Width Policy."

Additional BPA R/W rights may need to be acquired along an existing BPA corridor, at the point of interconnection, to accommodate additional facilities such as line switches or other high-voltage equipment. In these cases, BPA Real Property Services will be consulted in advance for consideration and support.

8.2 Lightning Protection and Grounding

All new transmission lines owned or maintained by BPA shall be designed according to BPA transmission line design standards STD-DT-000024, "Transmission Line Grounding Standard," and STD-DT-000064, "Transmission Line Lightning Protection."

8.3 Surge Protection

All lines connecting to a BPA substation shall include substation entrance surge protection in the form of Station class MOV surge arresters. BPA will determine the appropriate level of surge protection via grounding coefficient study including contingencies for loss of critical ground sources.

Line sectionalizing switching stations or switching terminals utilizing power circuit breakers, circuit switchers or similar electronically controlled switching device shall include surge protection on both line sides.

8.4 Underbuild

BPA transmission lines are not designed to accommodate underbuilds. Site specific analysis must be completed to determine if BPA will allow an underbuild. If permitted, the permitting shall be documented with requirements set forth by a pole contact agreement. Contact Customer Service Engineer for information.

9. CONTROL & PROTECTION REQUIREMENTS

9.1 Control and Protection Requirements

BPA coordinates its protective relays and control schemes to provide for personnel safety and equipment protection and to minimize disruption of services during disturbances. New connections usually require the addition or modification of protective relays and/or control schemes, including replacement or modification of equipment at the remote terminal(s). The new protection must be compatible with existing protective relay schemes and present standards. The addition of voltage transformers, current transformers, or pilot protection scheme (transfer trip) may also be necessary. If protective relaying equipment installed at the POD or POI will be maintained or operated by BPA personnel, or if these relays must communicate with BPA installed relays at remote terminals, then the BPA standard for this application must be followed. BPA will supply the Requester with protective relay system recommendations.

9.1.1 *Introduction*

The protection requirements identified in this document address the following objectives:

- Specify adequate protective relays that will quickly and reliably remove faulty equipment from the power system in order to: Minimize disruptions to the BPA transmission system and interconnected systems; Minimize safety risk to the public and utility personnel; and Minimize damage to power system equipment
- Ensure that protective relays are reliable and meet the requirements of BPA, NERC, WECC, and WPP.
- Introduce requirements for other protection and control schemes that may be required, e.g. transfer trip, RAS, load tripping, generator tripping, underfrequency load shedding, etc.

In order to achieve these objectives, certain protective equipment (relays, circuit breakers, etc.) must be installed. These devices ensure that the appropriate equipment is promptly disconnected from the BPA Grid during faults or other abnormal conditions. Protective equipment requirements depend on the plan of service. Significant issues that could affect these requirements include:

- The location and configuration of the proposed connection.
- The level of existing service and protection to adjacent facilities (including those of other BPA customers and potentially those of other utilities).
- The connection of a line or load that coincidentally connects a generation resource, which was not previously connected to the BPA Grid. In this case, the Requester must also follow the additional requirements for interconnection of generation resources.

BPA will work with the Requester to achieve an installation that meets the Requester's and BPA's requirements.

BPA cannot assume any responsibility for protection of Requester's equipment. Requesters are solely responsible for protecting their equipment in such a manner that faults, imbalances, or other disturbances do not cause damage to their facilities or result in problems with other customers.

9.1.2 *Protection Criteria*

The protection system must be designed to reliably detect faults or abnormal system conditions and provide an appropriate means and location to isolate the equipment or system automatically. The protection system must be able to detect power system faults within the protection zone. The protection system should also detect abnormal operating conditions such as islanding, equipment failures or open phase conditions. Special relaying practices may also be required for system disturbances, such as undervoltage or underfrequency detection for load shedding or reactive device switching. For most generation and some loads, the Requester will also be required to participate in RAS that includes automatic tripping or high-speed reduction (runback) of output.

9.1.2.1 <u>General Protection Practices</u>

The following summarizes the general protection practices as required by NERC and WECC, as well as specific practices and applications as applied to BPA transmission lines and interconnections. The protection schemes and equipment necessary to integrate the new connection must be consistent with these practices.

specifies maximum allowable operating times for protection systems and breakers by voltage category.

Table 5.— Relay and Breaker Operating Times by System Voltage

Connection Voltage (Line-Line rms)	Total Clearing Time (Cycles)	Maximum Relay Operate Time (Cycles)	PCB Trip Time (Cycles)	Time Delayed Tripping Acceptable?
< 100 kV	≤ 12-14*	≤ 4-6*	≤ 8	Yes
100 to 138 kV	≤ 7-9*	≤ 2-4*	≤ 5	Yes
161 to 230 kV	≤ 5-7*	≤ 2-4*	≤ 3	Yes
230 kV Main Grid to 345 kV	≤ 4	≤ 1	≤ 2	No**
500 kV	≤ 4	≤ 1	≤ 2	No**

*** RELAY OPERATING AND TOTAL CLEARING TIMES ARE FOR INSTANTANEOUS ELEMENT TRIPS AT THE TERMINAL CLOSEST TO THE FAULT. INVERSE TIME AND TIME DELAYED ELEMENTS ARE CONSIDERABLY LONGER. SEQUENTIAL INSTANTANEOUS OR TIME DELAY TRIPPING MAY OCCUR AT THE REMOTE TERMINAL.**

****TRANSFER TRIP OR OTHER COMMUNICATIONS AIDED-TRIPPING IS REQUIRED.**

9.1.2.1.1 Selection and Review Considerations

The POI protection system security and dependability and the related effects on the power system must be carefully weighed when designing the protection system. BPA reserves the right to review and require changes to the POI protection system and settings.

9.1.2.1.2 Regulatory Requirements

Protective relays and their settings are required to follow various regulatory requirements such as NERC and WECC Standards. These requirements are subject to change. Although BPA attempts to provide guidance to customers regarding these requirements, BPA is not responsible for the failure of a customer's protective relay systems to meet these requirements.

9.1.2.1.3 Reliability and Redundancy

Protective relay systems must be designed for reliability and redundancy. The protection system must be capable of meeting the operating times for the appropriate voltage class specified in Table 5, and redundancy is required so that the failure of any single protection system component will not prevent the system from meeting the requirements of Table 5. This will normally require redundant relays—each with currents and voltages provided from separate secondary windings—redundant breaker trip coils, and if required by the protection scheme, redundant communication systems. Redundant station batteries are not required if battery monitoring meets NERC standards, but each set of relays must have its own separately protected DC source.

9.1.2.1.4 Instrument Transformers

The secondary relay currents and potentials to the redundant relays must be sourced from separate instrument transformer secondary windings so that the failure of one secondary winding will not disable all of the redundant relays. The use of capacitive voltage transformers (CVTs) and magnetically coupled voltage transformers (MVTs) is generally acceptable for protection purposes. The use of bushing potential devices for protective relaying may not be appropriate if the protection device includes settings for frequency deviations and overvoltages. Current transformers used for protective relaying should generally have a C800 accuracy class rating.

9.1.2.1.5 Test Switches

For relay installations that BPA will own or maintain, BPA requires a sufficient number of test switches and isolating devices to provide ease of testing and maintenance without the need for lifting wires.

For customer owned and maintained relay installations, BPA recommends sufficient test switches and isolating devices to allow ease of maintenance and testing. BPA also recommends that maintenance tagging and switching procedures be developed to prevent inadvertent trips during maintenance, or test switches or isolating devices being inadvertently left in an incorrect state.

9.1.2.1.6 Security Over Ranges of Loading and System Voltage

NERC Standard PRC-023 requires that protective relays must not operate for load conditions up to 150% of the equipment rating and voltages as low as 85% of nominal. Relay settings shall not infringe upon BPA's ability to operate at maximum transfer levels.

9.1.2.1.7 Synchronizing and Reclosing

At the POI, the customer is not allowed to energize a de-energized line connected to the BPA grid without approval of the BPA dispatcher. Breaker reclose supervision (automatic and manual including SCADA) may be required at the connecting substation and/or electrically adjacent stations. This may include hot-bus and dead-line checking, synchronization checking, etc.

9.1.2.2 Protection Performance

Protection systems must be capable of performing their intended function during fault conditions. The magnitude of the fault depends on the fault type, system configuration, and fault location. It may be necessary to perform extensive model line tests of the protective relay system to verify that the selected relay works properly for various system configurations. Power system swings, major system disturbances and islanding may require the application of special protective devices or schemes. The following discussion identifies the conditions under which relay schemes must operate.

9.1.2.2.1 Phase Fault Detection

The relay system must be able to detect multi-phase faults and trip at high speed for high fault currents. Non-directional overcurrent, directional overcurrent, distance, and line differential relays may be applicable depending on system requirements.

Infeed detection to faults within the power system usually require directional current-sensing relays to remove the contribution to the fault from the POI. The distance relay (IEEE device 21) is a good choice for this application since it is generally immune to changes in the source impedance.

9.1.2.2.2 Ground Fault Detection

Ground fault detection has varying requirements. The availability of sufficient zero-sequence current sources and the ground fault resistance both significantly affect the relay's ability to properly detect ground faults. The same types of relays used for phase fault detection are suitable for ground fault detection. If ground fault distance relays are used, backup ground time-overcurrent relays should also be applied to provide protection for inevitable high-resistance ground fault.

9.1.2.2.3 Breaker Failure Protection

Breaker Failure Protection is required on all breakers at transmission voltage, which BPA defines as 69 kV and above. For three-cycle or faster breakers, the breaker failure relay is generally set to trip the breaker if the fault has not been cleared within 8 cycles after the relay trip command. Breaker failure relays are not required to be redundant.

9.1.2.2.4 Islanding

Intentional islanding is a utility practice to deliberately choose to isolate its distribution system and use local generation to feed loads during transmission system outages.

Unintentional islanding describes a condition in which the power system splits into isolated load and generation groups, usually when breakers operate for fault clearing. Delayed fault clearing, overvoltages, ferroresonance, extended undervoltage and off-nominal frequency operation, and degraded service quality for other customers can result from a local unintentional islanded condition.

BPA does not allow unintentional islanding conditions to persist that include its facilities, except for a controlled, temporary, area-wide grid separation. Where generation is connected to the BPA transmission system, implications of unintentional islanding must be addressed to minimize adverse impacts on connected loads.

Generation facilities equipped with over and under frequency (81O/U) and over and under voltage (59/27) protective relays may also use those relays to partially meet BPA's requirements to detect and trip on unintentional islanding conditions. Settings for these relays shall be in accordance with WECC underfrequency load shedding requirements. BPA reserves the right to require more extensive unintentional islanding protection.

9.1.2.2.5 Relay Performance and Transfer Trip Requirements

Relay systems are designed to isolate the transmission line and/or other facilities from the BPA Grid. However, the performance (clearing time) of local relay systems and the associated isolating devices (circuit breakers, etc.) will vary. The protection equipment of the new connection must at least maintain the performance level of the existing protection equipment at that location.

In general, protective relay schemes at 230kV and above require the relays to be capable of providing an instantaneous trip (i.e. with no intentional delays) for faults anywhere on the protected line. This will require some type of pilot telecommunications to ensure secure, high-speed fault clearing. Lower voltages may also require pilot telecommunications to ensure secure, high-speed fault clearing. BPA normally uses direct under-reaching and permissive overreaching transfer trip, but other types of pilot tripping such as directional comparison, phase comparison or current differential may also be acceptable if the chosen scheme can achieve the total clearing times required and is compatible with the selected method of pilot telecommunication.

There are several other situations that will require a transfer tripping scheme to facilitate the operation of a remote breaker. Some of these situations are given below.

- Transient or steady-state studies identify conditions where maintaining system stability requires immediate high-speed separation of the POI facility from the power system.
- Special operational control considerations require immediate separation of the POI from the BPA Grid.
- Extended fault duration represents an additional safety hazard to personnel and can cause significant damage to power system equipment.
- Slow clearing or other undesirable conditions such as extended overvoltages or ferroresonance which cannot be resolved by conventional local protection measures and will require the addition of pilot protection tripping using remote relay detection at other substation sites. This scenario is a distinct possibility should a BPA circuit that connects other customer loads become part of an unintentional island that includes a generator.
- When remote circuit breaker tripping is required, in order to clear faults in a transformer not terminated by a high side breaker, high-speed transfer tripping will be required. The transfer trip may also be required to block automatic reclosing. Other unique configurations may impose the same requirement.
- Relay operating times are adjusted to coordinate for faults on the local configuration such as a three terminal lines, fault currents available, etc. Total clearing times must be less than those listed in Table 5. Refer to Section 10 for telecommunication issues as they pertain to control and protection requirements.

9.1.2.2.6 Synchronizing and Reclosing Requirements

Synchronizing and reclosing requirements can vary widely depending on the specific circumstances. For radial feeds, single- or multi-shot reclosing is generally allowed for single- or multi-phase faults. For network transmission lines, reclosing is generally limited to a single shot for 230kV and above lines, and only for single-phase faults for 500kV lines. A minimum dead time of 35 cycles is required. If the new connection results in the possibility of connecting a generation source, special considerations may be required. Requester is responsible for coordinating any synch-check relay settings with BPA System Protection and Operations. Sections 9.1.4.2 and 13.6 identify synchronizing and reclosing requirements specifically related to generator additions.

If a connection is made to an existing line, automatic reclosing schemes at the remote line breakers may need to be modified. On transmission lines below 138 kV, automatic-

sectionalizing schemes may be installed to isolate a portion of the system that has a permanent fault. This includes multi-shot automatic reclosing at remote terminals. A new interconnection should be compatible with such existing schemes.

9.1.3 *Protection System Selection and Coordination*

9.1.3.1 Protection Requirements for the Interconnecting System

Upon request, BPA will supply the Requester with a list of protective relay systems considered suitable for use at the POI. Should the Requester select a relay system not on the approved list, BPA reserves the right to perform a full set of acceptance tests prior to granting permission to use the selected protection scheme. Alternatively, the relay vendor or a third party may be asked to perform thorough model line tests of the proposed relay system. If there are special performance requirements for the protective relays at the POI, BPA will notify the Requester.

9.1.3.2 Protection System Coordination and Programming

The following are basic considerations that must be used in determining the settings of the protection systems. Depending upon the complexity and criticality of the system at the POI, complete model line testing of the protection system, including the settings and programming, may have to be performed prior to installation to verify the protection system performance.

- Fault study models used for determining protection settings should take into account significant zero-sequence impedances. Up-to-date fault study system models shall be used.
- Protection system applications and settings should not limit normal transmission use.
- Application of zone 3 relays or other relays with settings overly sensitive to overload or depressed voltage conditions should be avoided where possible. These relays must meet NERC and WECC standards for relay loadability.
- Protection systems should prevent tripping for stable swings on the interconnected transmission system. During a system disturbance, power swings may result which can affect operation of protective relays, especially distance relays. Out-of-step blocking is commonly applied to distance relays to prevent inadvertent operation during a power swing. However, the application of such schemes must be coordinated with BPA to ensure that blocking the distance elements will not result in the inappropriate or undesirable formation of islands.
- Protection system applications and settings shall be reviewed whenever significant changes in generating sources, transmission facilities, or operating conditions are anticipated.
- All protection system trip misoperations shall be analyzed for cause, and corrective action taken.

9.1.3.3 Relays for the Point of Interconnection

The following list of relays has been developed in recognition of varied interconnection requirements. Relay performance under certain fault scenarios is also a consideration in the selection of these relays. The specific relays used must be functionally consistent

with and complementary to BPA's general protection practices identified in Section 9.1.2.

The relay functions generally necessary to serve this purpose as used by BPA include:

- Phase overcurrent (non-directional) (50/51)
- Neutral overcurrent (non-directional) (50/51-N)
- Voltage restrained overcurrent (51-V)
- Zone distance (phase or phase and ground distance) (21/21-N)
- Directional ground overcurrent (67-N)
- Ground overcurrent (51-G)
- Or ground fault detection scheme (59-Z)
- Over/under voltage (59/27)
- Over/under frequency (81)
- Instantaneous overvoltage (ungrounded high side) (59)
- Remote automatic breaker reclose supervision (79-X)
- (HB/DL, HB/HL with synchronism check)
- Current differential (87)

Except as otherwise agreed by BPA, BPA will furnish, install, operate and maintain all relaying at the POI for the purposes of protecting the BPA Grid. Other relaying for protection of the Requester's equipment will be the responsibility of the Requester. All relays, which can adversely affect the BPA Grid, shall be 'utility grade' quality, subject to review by BPA.

Refer to Section 10 for telecommunication issues as they pertain to control and protection requirements.

9.1.4 *Generator Protection - Special Requirements*

Integration of new generation has special requirements in addition to the previously described protection requirements. This section primarily deals with the protection requirements for the integration of rotating machines. Wind turbine installations require special considerations. The actual protection requirements and choice of relay type will vary depending upon several factors including:

- MVA capacity of the generation
- Generation Type: synchronous or asynchronous
- Location of the generation interconnection on the transmission grid
- Voltage level of the generation interconnection
- Transformer winding configuration for the generator step-up transformer and/or interconnecting transformer
- Change in the fault current as a result of the added generation
- Availability of telecommunications facilities

Examples of some typical generator integration plans are shown in Figure 811 through Figure 14. Table 6 identifies the protection equipment that may affect operation of the BPA Grid. The type of resource proposed and location of the POI will determine any special protection requirements for other types of resources, such as photovoltaic, wave, etc.

9.1.4.1 Fault Protection

Protective relays are required to detect phase and ground faults on the generator interconnection. The relay systems shown in Figure 8 through Figure 14 are designed to isolate the generator from the BPA grid at or near the POI. However, the performance (clearing time speed) of these local relay systems and the associated isolating devices (circuit breakers, circuit switches etc.) will vary. In most cases, protective devices described in Section 9.1.3 will also be appropriate for interconnection.

BPA has various requirements for ground fault detection. The most significant consideration in the ability to detect ground faults on the BPA Grid is the winding configuration of the transformer connecting the generator to the grid. The scenarios below assume that the generator is connected to the low-voltage side of this transformer.

9.1.4.1.1 Transformer Grounded Wye (YG) Connection on the BPA Grid Side

This is the BPA required transformer connection when adding a new generation resource to the transmission grid. The transformers will either be YG-Δ or YG-Δ-YG. Either of these connections provides grounding for the transmission grid.

For a transformer connected with a grounded-wye on the primary (high-voltage) side, a ground overcurrent relay (50/51-G) connected in the neutral of the wye winding provides transmission fault detection. This relay also protects the transformer from those faults.

A directional ground overcurrent relay (67-N) is generally provided for detection of ground faults in the transmission system when transformer connections are of the types identified above. Since this relay function complements zone-distance protection used for phase fault detections, it is included in many presently manufactured relays. See Figure 811, Figure 11 and Figure 14 for typical examples of this configuration.

9.1.4.1.2 Transformer Delta (Δ) Connection on the BPA Grid Side and Potential Overvoltages

Some smaller generation projects are proposed for integration into existing utility power systems through a delta transformer connection to the transmission grid. This Δ-YG transformer was originally designed only to serve loads; e.g., connection at the 12.5 kV side of the 115 kV/12.5 kV transformer. This common transformer configuration requires special relay considerations when generation is proposed for connection to the low voltage terminal. The existing protection at these installations was applied under the assumption that there was not a source from the low-voltage side to infeed to faults in the power system. BPA will review all such requests on a case-by-case basis to determine acceptability. New relays, transfer trip, ground detection equipment, or a grounding transformer may be required to ensure timely removal of the generation source for safe clearing of faults on the transmission system. Figure 82 and Figure 114 show examples of this configuration.

Table 6.— Relay Functions for Figure 11 through Figure 15

Interconnecting Substation, High Voltage Transmission Line Protection		
The following relays are intended for the interconnecting substation to detect faults on the BPA Grid and isolate the interconnecting substation from the BPA Grid.		
Figure	**Relay**	**Intent**
5, 6, 8, 9	21-1, 21-2/62	Distance relays trip line breakers for multi-phase faults on the transmission lines to the Interconnecting Substation. Ground distance relays may be used for ground faults. These relays may have single pole switching capability. They also may be connected to a transfer trip or other pilot channel. More than two zones may be required.
5, 6, 8, 9	67N	Directional ground overcurrent relay trips line breakers for ground faults on the transmission lines to the Interconnecting Substation. These relays may have single pole switching capability. They also may be connected to a transfer trip or other pilot channel. Potential polarization: shown in the figures. Current polarizing or negative sequence polarizing may also be used.
5, 6, 8, 9	87	Line differential relays are often necessary to avoid coordination problems with other relays to limit nuisance trips of the generator. Distance relays (21), directional overcurrent ground relays (67N), and a permissive overreach transfer trip may also be used.
5 -9	79X	Automatic reclose supervision is necessary at the interconnecting substation and/or the remote high voltage substations when a generator is added. This includes a hot bus/dead line (HB/DL) check and a synchronism check. The automatic reclose supervision will prevent the transmission line from reclosing if the generator remains in service and is not in synchronism with the BPA Grid.
7, 8	59	This relay detects overvoltages, and ground faults as indicated above. With an instantaneous trip at 1.5pu overvoltage. It is provided to avoid arrester failure for ground faults. This scheme is most often required when the interconnecting substation includes a Δ-YG transformer.
Interconnecting Substation, Transformer Protection		
The following devices are typically used at the interconnecting substation to provide protection of the power transformer that interfaces between the generator and the BPA Grid.		
Figure	**Relay**	**Intent**
7, 8	59 Z	A ground fault detection scheme is used to detect ground faults on the tapped transmission line. (Normally the open delta 3V0 scheme with inverse time characteristic). Trips of this relay may need to be time coordinated with other relays so that faults beyond the tapped transmission line do not cause unnecessary trips of the generator feeder. This scheme is most often required when the interconnecting substation includes a Δ-YG transformer.
7	Fuse	Some existing Δ-YG transformers may have high side fuse protection. This is not acceptable for new installations.
5 -9	50/51, 50/51N , 51V	These relays protect transformers from overcurrent conditions caused by low side faults, extreme overloads, and unbalances. Phase overcurrent relays are usually set to pick up at approximately twice the transformer thermal rating. These relays are time-coordinated with low side feeder relaying. Voltage restrained time overcurrent relays may be used instead of the standard 50 element. 50/51 relays may also provide backup for transformer 87 relays.
5, 6, 8, 9	50/51G	This relay protects transformers from overcurrent conditions caused by low side ground faults or extreme unbalances. These relays are time-coordinated with low side feeder relaying.
5 -9	63	Sudden pressure or Buchholz relays may also be provided for the transformer.
5 -9	87	Transformer differentials relays may be used for transformer protection.
Generator Interconnection		
The following relays are required at or near the generation. These relays do not provide fault protection for the generator itself, which is the responsibility of the generator owner.		
Figure	**Relay**	**Intent**
5 -8	25	This relay provides synchronism check supervising function for generator breaker close circuits.
5 -9	27/59	These relays detect abnormal voltage conditions often caused by unintentional island operation scenarios. The undervoltage relay can serve as a means of fault detection for instances of

		weak fault current infeed from generator to faults on the feeder or interconnected system. It protects generator against extended operation at abnormal voltages. Undervoltage relay settings are coordinated with Pacific Northwest undervoltage load shedding plan.
5 -9	81	This relay detects abnormal frequency conditions, often caused by unintentional island operation scenarios. It protects generator against extended operation at abnormal frequencies. Underfrequency relay settings are coordinated with the WECC and WPP underfrequency load-shedding plan.

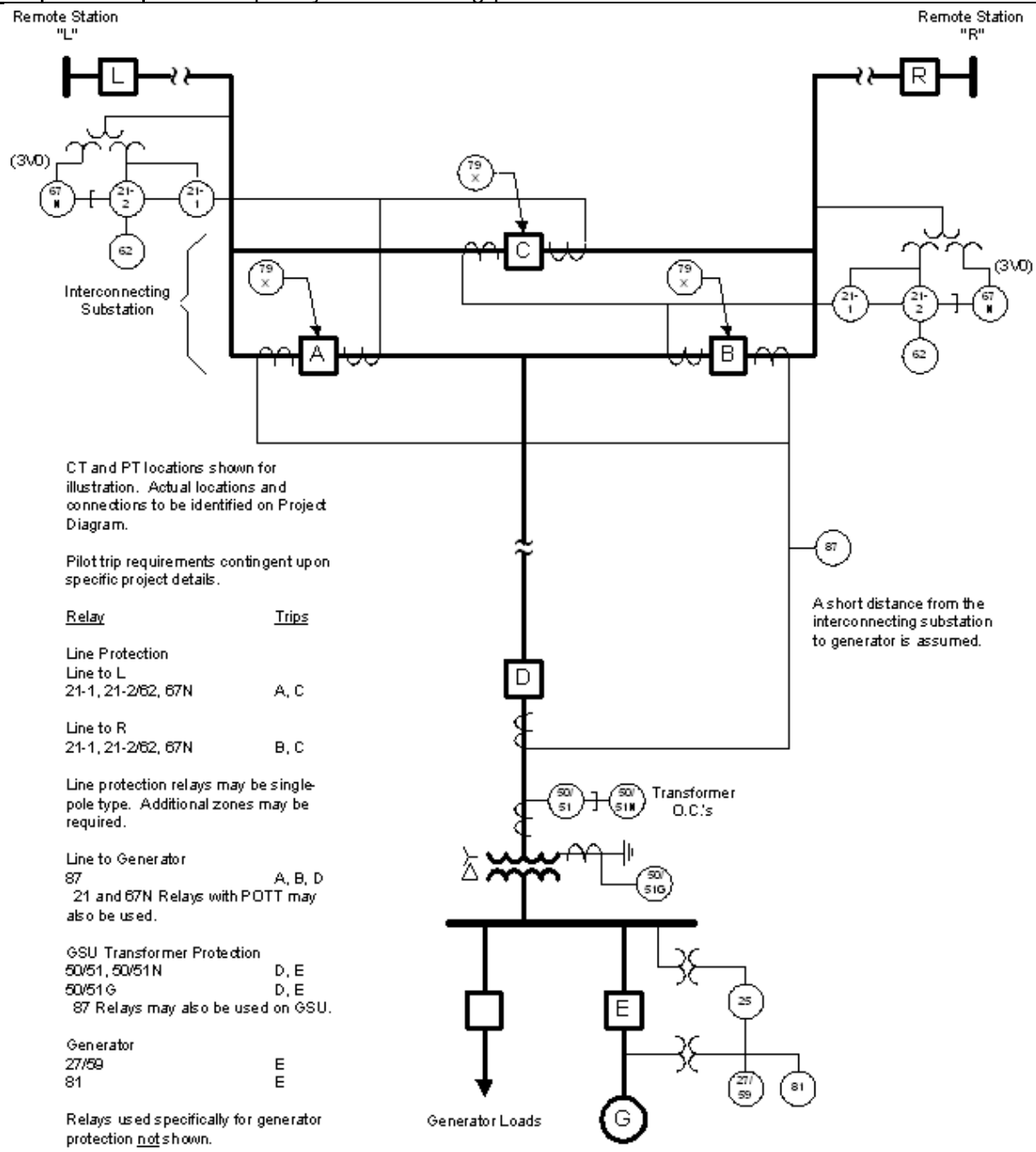

Figure 11.--- Integration of Generation into a Transmission Level Substation

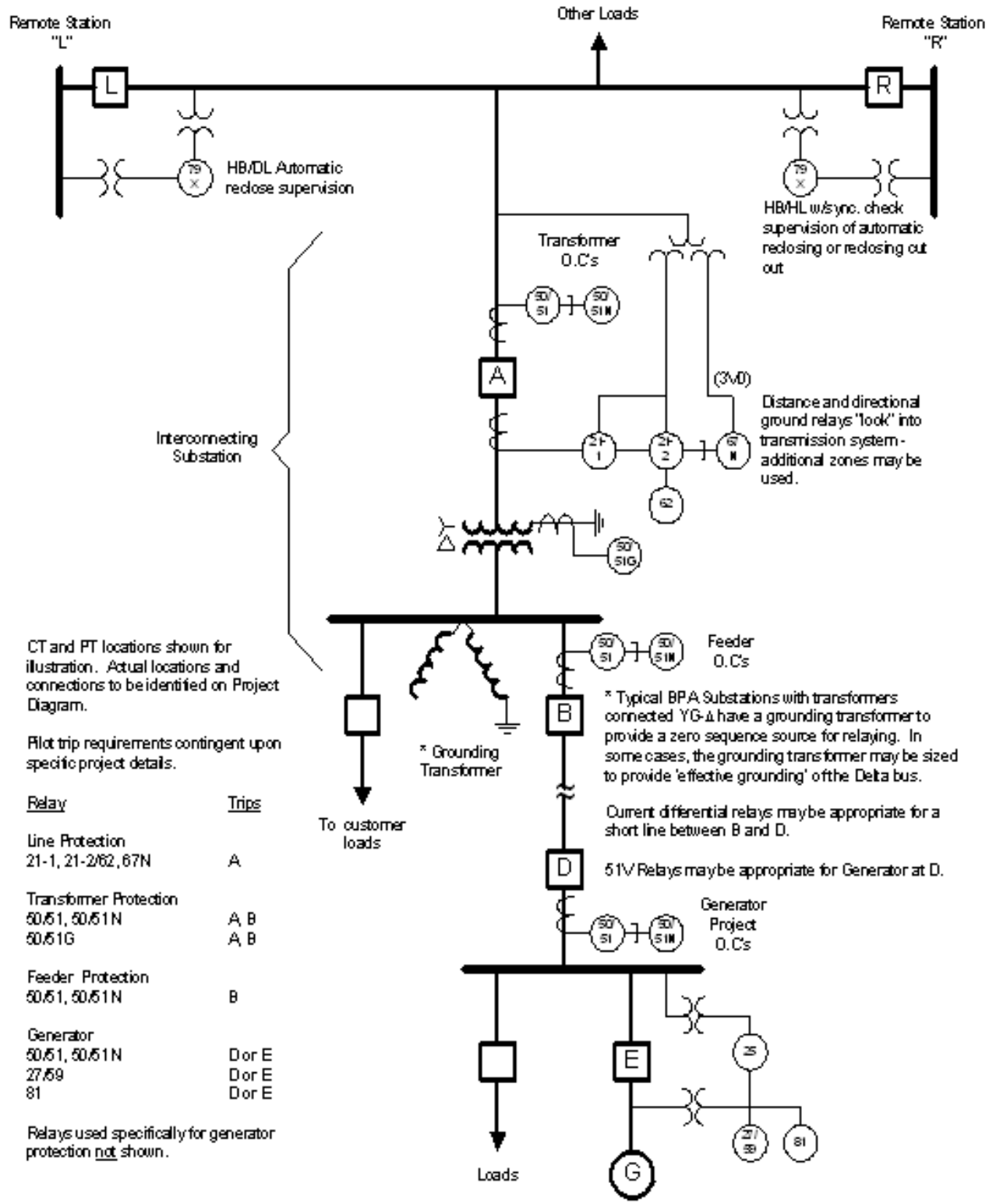

Figure 12.--- Integration of Generation into a Low Voltage Substation Protected by a High Side Circuit Breaker and Connected to a Transmission Line Through a YG-Δ (as shown) or YG-Δ-YG Transformer

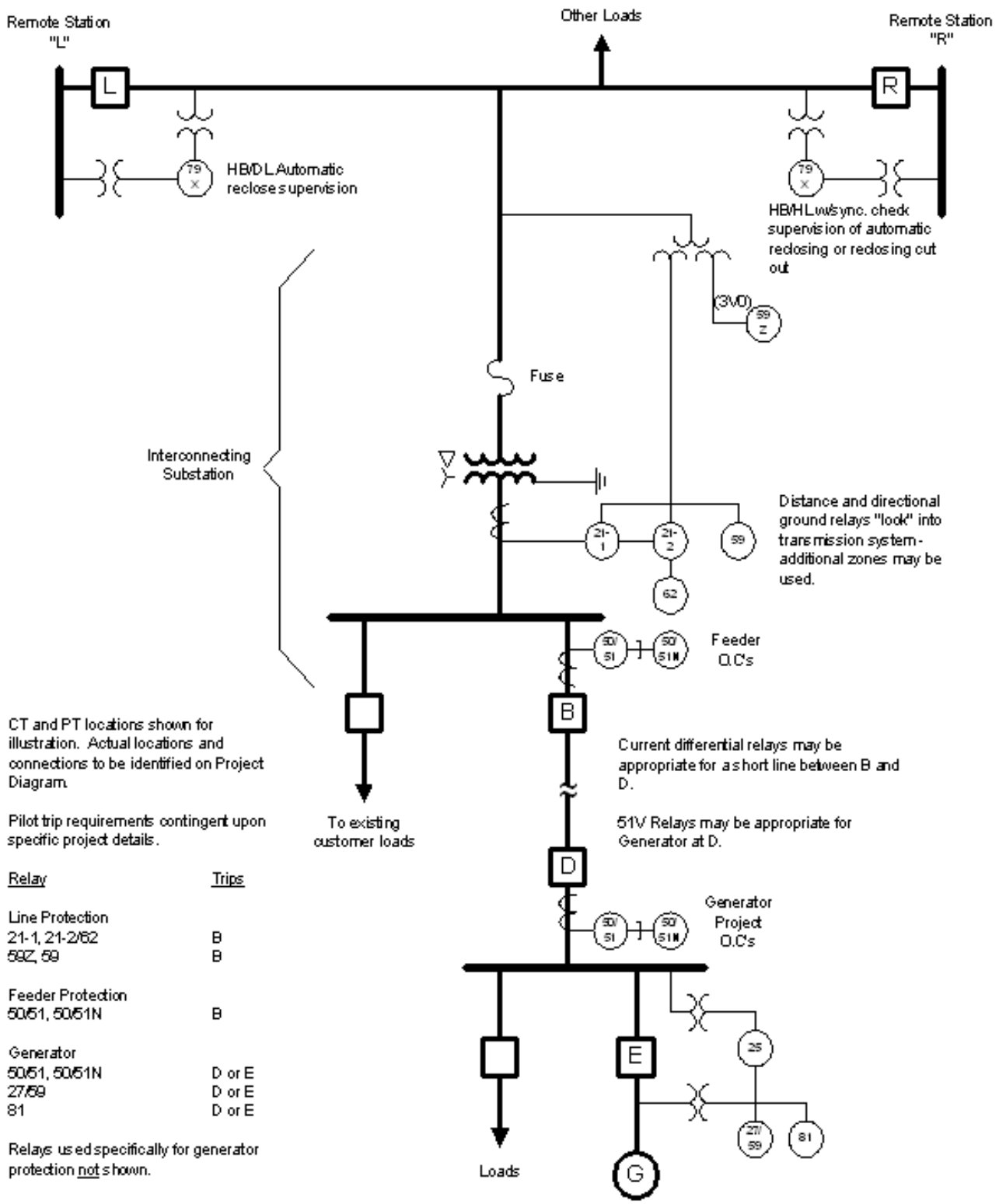

Figure 13.--- Integration of Generation to an Existing Low Voltage Substation Connected to the Transmission line Through a Fused Δ-YG Transformer

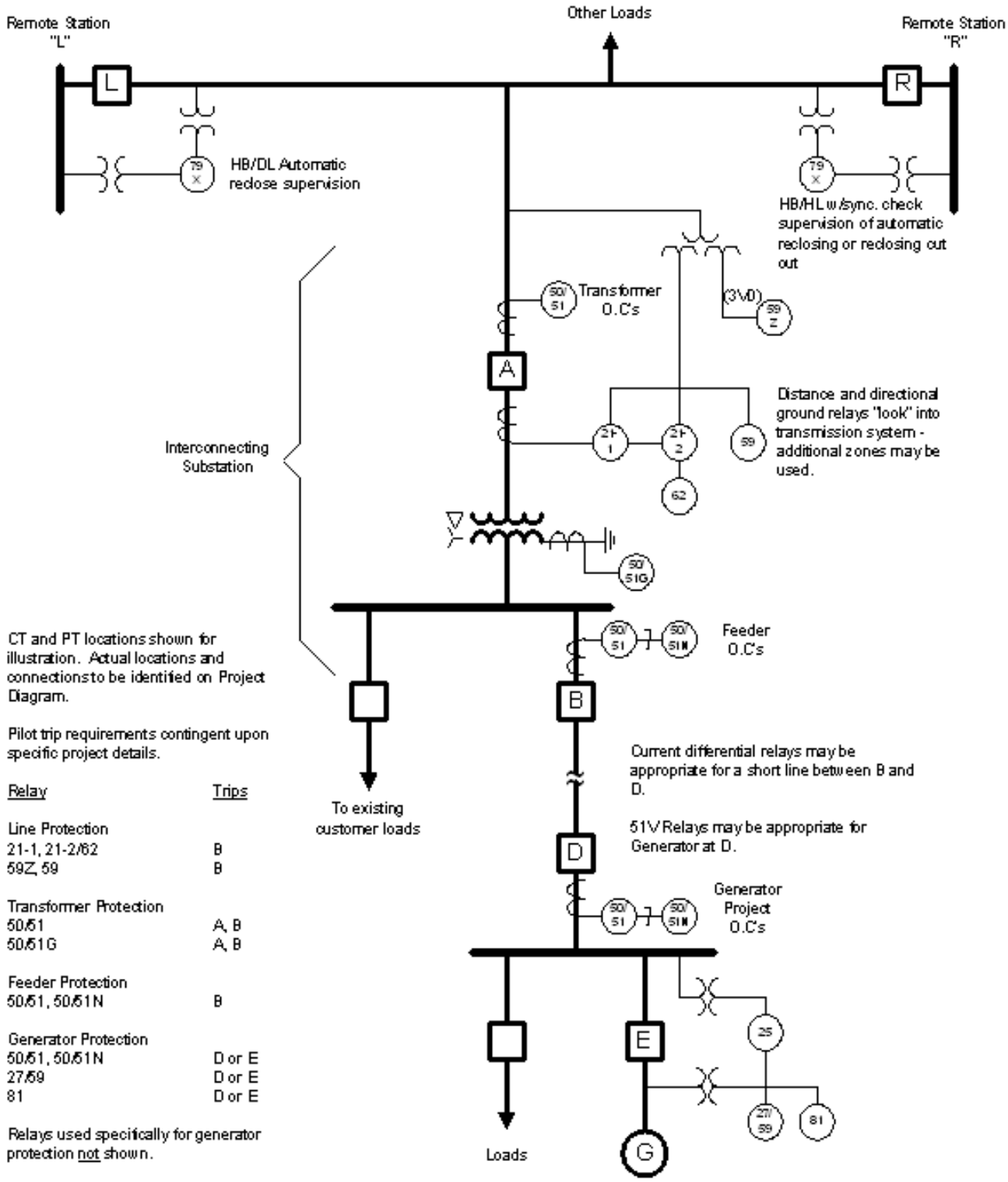

Figure 14.--- Integration of Generation to an Existing Low Voltage Substation Connected to a Transmission line a Δ-YG Transformer and Protected by a High Side Circuit Breaker (Switcher)

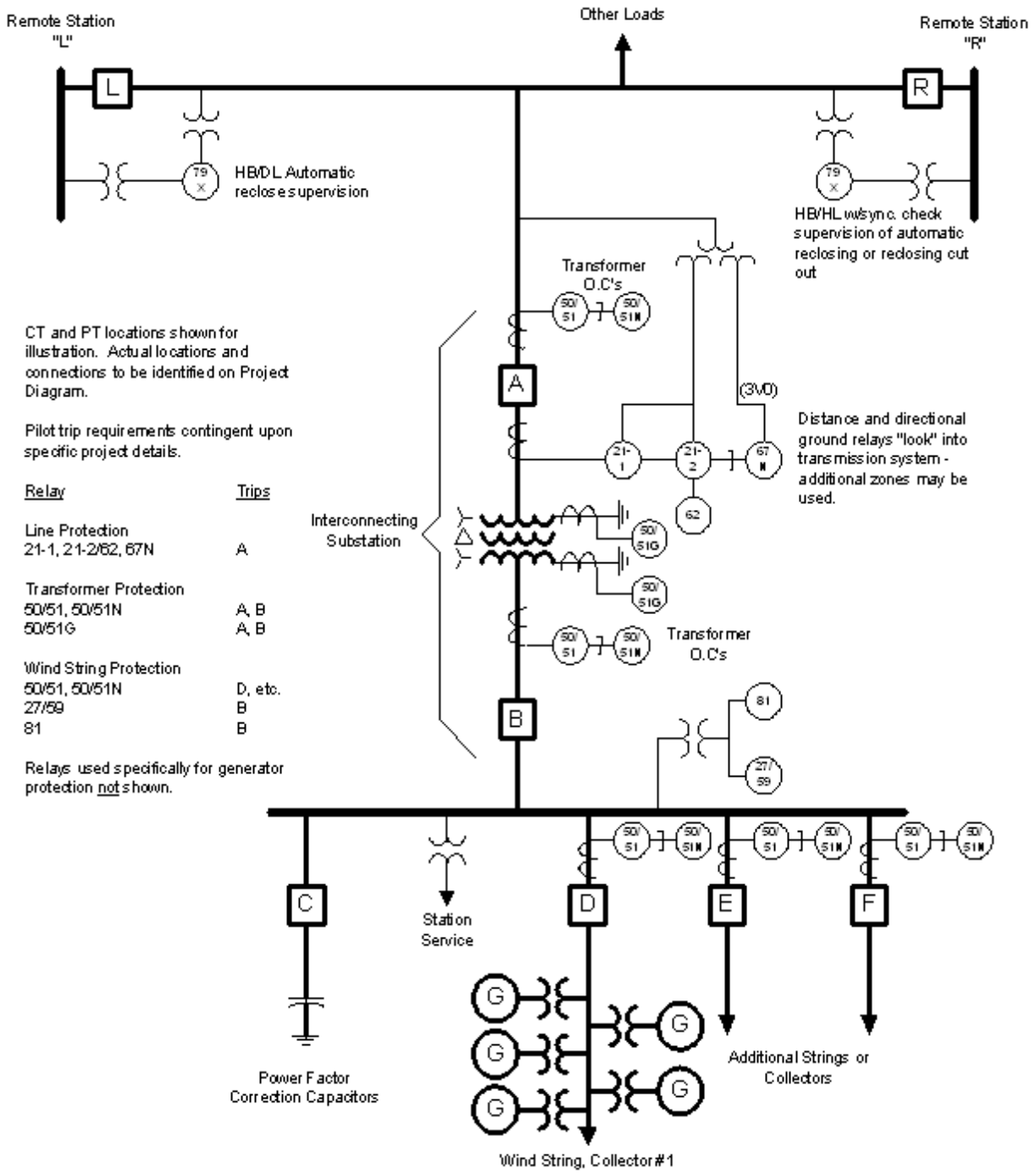

Figure 15.--- Integration of a Typical Wind Generation Facility to a 69 kV or 115 kV Transmission Line Through a YG-Δ-YG Transformer

9.1.4.1.3 Potential Overvoltages with Delta Connection on the Transmission Side

For ground faults on the high voltage system, protective relaying at the transformer cannot detect zero sequence current at this location unless a ground source (grounding

bank) is connected to the high-voltage side of the transformer. Circuit breaker operation(s) at the remote terminal(s) of the transmission line will isolate the line. However, the generator will continue to energize the transmission line creating a 'local island' condition described previously. With one phase grounded, energizing from the transformer low side can result in significant overvoltages (neutral shift) on the unfaulted phases of the transmission line.

It is normally assumed that these overvoltages would equal 1.7 pu. However, studies have indicated that the voltages on the unfaulted phases of the transmission line can be even higher than the 1.7 pu, particularly if the generation is large compared to the local load that is islanded with the generator when the line-end breakers trip.

If the generator rating is about the same as the local load on the islanded transmission line, additional overvoltages above 1.7 pu are not to be expected. Studies have indicated that if the generator rating is considerably smaller (1/3 or less) than the minimum local load, then the voltage on the islanded system should quickly collapse.

9.1.4.1.4 Acceptable Solutions to Transmission Line Overvoltages

Overvoltages can potentially damage lightning arresters and other equipment connected to an isolated transmission line. There are three acceptable solutions to resolve the potential overvoltage problems resulting from the Δ-YG transformer neutral shift following a line to ground fault on the transmission line.

- High Side Grounding
  The best and preferred solution to eliminate the 1.7 pu overvoltages is to replace the Δ-YG transformer with a YG-Δ or YG-Δ-YG transformer or install a separate ground source on the transmission line. Wind turbine sites usually require a grounded distribution or collection system, so the YG-Δ-YG transformer configuration is necessary. See Figure 11. If the transformer configuration is changed or a separate grounding transformer added, overcurrent protection similar to that described in Section 9.1.4.1.1 can be used.
- Transfer Trip
  Transfer trip is installed from the circuit breaker(s) that clear the transmission line to breakers that can isolate the generator. The breaker that is used for this separation should be as fast as available. One of the line end breakers may even need delayed tripping to ensure that it clears last, preventing islanded generator operation. Transfer trip is usually necessary when the high side grounding solution is not feasible or for an existing station with a delta connected high side transformer winding. Transfer trip may still be required, even with high side grounding, to meet special protection and/or remedial action requirements.
- Broken Delta 3V0 Voltage Detection Scheme
  It may be possible to use a zero-sequence overvoltage (3V0-59) relay connected to the high side of the Δ-YG transformer to detect this ungrounded operation. The 3V0 protection scheme uses three voltage transformers on the primary side of the transformer connected phase-to-ground. The voltage transformers must have a full line-to-line voltage rating and must be capable of measuring voltages up to 1.9 pu voltage continuously. The relay initiates a trip to eliminate the generator infeed on

the faulted line. BPA will review each application to determine the acceptability of this scheme. If the 3V0 voltage detection scheme is selected, it may also require the replacement of lightning arresters on the transmission line. The new arresters require a higher rated voltage and higher temporary overvoltage capability properly sized to withstand the expected overvoltage conditions. Other high-voltage line-to-ground equipment that may be damaged by the overvoltage also needs to be replaced.

The 3V0 open delta scheme cannot protect for the case of overvoltages created when a small generator is isolated in a 'local island' with a relatively large amount of capacitance, such as a long line or a capacitor bank. Under and overvoltage relays (27, 59) measuring each phase voltage may be used in conjunction with the 3V0 overvoltage relay to provide additional protection for these conditions.

If a transfer trip scheme or 3V0 scheme is selected to detect a ground on the transmission side of the step-up transformer, it is also critical that the device trip a circuit breaker on the low voltage or grounded side of the step-up transformer. Neutral shift on the high side can limit the interrupting capability of high side devices, possibly causing failure. The number of low side devices allowed to trip for a high side fault may be a consideration. BPA reserves the right to require additional equipment, such as a low side circuit breaker on the transformer, to minimize the number of devices tripped.

9.1.4.2 Synchronizing and Reclosing

The generator operator is responsible for synchronizing the unit to the BPA Grid. See Section 13.6. Circuit breakers under the control of the BPA, required to maintain system integrity, shall not be used for synchronization. The BPA Dispatcher must give the generator operator permission before a generator is synchronized to the BPA Grid. All circuit breaker closing operations must have synch-check or equivalent supervisory relays and controls to automatically synchronize the generator back to the BPA transmission system.

If the generator connects to an existing line, automatic reclosing schemes at the remote terminals require modification to accommodate the generator interconnection. A hot bus/dead line check is usually applied at one terminal before attempting an automatic reclose. Line-side PTs on all three phases may be necessary to ensure all three phases are dead before reclosing is attempted as well as to allow for recording of voltage waveforms on all three phases during fault and reclose events. Hot bus/hot line with synchronism check supervision is necessary for automatic reclosing at the other terminal.

9.1.4.3 Required Relay Settings for Generators Connected to the Transmission Grid

Voltage and frequency relays used for protecting a generator and preventing an unintentional island condition from persisting must meet the requirements listed below to allow proper coordination with the power system. These relays are usually installed at the generation site or at the interconnecting substation. See Section 9.1.2.2.4.

The ranges, settings, and delays below for both voltage and frequency relays are understood by BPA to be well within the capabilities of small and large modern steam

turbines as well as other generators. BPA will evaluate proposed alternative voltage/frequency settings based upon the impact on system performance and reliability. The settings must comply with existing WECC and NERC requirements.

9.1.4.3.1 Voltage Relays (27, 59)

The over/under voltage relay setting/delays listed below are intended to ensure that generators trip when the connections to the power system have been interrupted, preventing extended unintentional islanding. However, minimum time delays before tripping are required to allow generators to ride through temporary low or high voltages that result from system faults or other transient events. The list below shows these minimum time delays and follow the voltage ride-through requirements of NERC PRC-024.

In areas where under-voltage load shedding plans are in use it is critical that generators do not trip prior to the completion of all automatic undervoltage load shedding. BPA may require additional time delays on generation applied in an area which is part of an under-voltage load shedding plan as shown in Table 7.

Table 7.— Under and Over Voltage Relay Settings and Operate Times

Overvoltage (59)	
Voltage	**Action**
≥1.200 pu	Instantaneous tripping allowed
≥1.175 pu	0.20 second minimum delay before unit tripping
≥1.150 pu	0.50 second minimum delay before unit tripping
≥1.100 pu	1.00 second minimum delay before unit tripping
<1.100 pu	no over-voltage tripping allowed
Undervoltage (27)	
Voltage	**Action**
<0.45 pu	0.15 second minimum delay before unit tripping
<0.65 pu	0.30 second minimum delay before unit tripping
<0.75 pu	2.00 second minimum delay before unit tripping
<0.90 pu	3.00 second minimum delay before unit tripping
≥0.90 pu	no under-voltage tripping allowed

9.1.4.3.2 Frequency Relays (81)

If a generator facility includes a frequency relay (81) for under and/or overfrequency protection, the frequency settings and time delays must coordinate with the underfrequency load shedding plan. The frequency ranges and minimum setting/delay requirements for over/under frequency relays (81), shown in Table 8, were established by the WECC Coordinated Off-Nominal Frequency Load Shedding and Restoration Program and the WPP Enhanced Underfrequency Load Shedding Program and have now been incorporated in NERC Standard PRC-024. The objective of these settings is to use the machine capability to support the power system and prevent unnecessary loss of system load during disturbances, and ultimately, to help prevent system collapse. Generating resources must not trip off before load is shed by underfrequency relays. A generator should not be tripped by frequency relays for frequencies between 59.4 Hz and 60.6 Hz. For frequencies equal to or below 57.0 Hz or above 61.7 Hz there are no special requirements for tripping times. Table 8 specifies the under and

overfrequency limits and minimum time delays. The intent is to coordinate generator tripping with load shedding schemes.

Table 8.— Under and Over Frequency Relay Settings and Operate Times

Underfrequency Limits (Hz)	Overfrequency Limits (Hz)	Minimum Time Delay Setting
60.0 > f > 59.4	60.0 < f < 60.6	No generator tripping allowed
59.4 ≥ f > 58.4	60.6 ≤ f < 61.6	3 minutes
58.4 ≥ f > 57.8	61.6 ≤ f < 61.7	30 seconds
57.8 ≥ f > 57.3		7.5 seconds
57.3 ≥ f >57.0		45 cycles
f ≤ 57.0	f ≥ 61.7	Instantaneous trip

For generators that are not susceptible to damage for the frequency ranges listed above (e.g. typical hydro units), tripping above 61.7 Hz and at or below 57.0 Hz, with no intermediate steps is suggested. For steam turbines and similar units, relay(s) with multiple frequency setpoints and discrete time delays could be used to realize the settings above.

Often, large generation resources are directly connected to a substation at the transmission level voltage and would not be part of the unintentional islanding condition previously described in Section 9.1.2. For these generators, the 61.7 Hz trip level may be raised and the 57.0 Hz trip level may be lowered. However, the minimum delays listed above for all frequency deviations from 60 Hz must be maintained. For those generators that may become part of an unintentional island, a maximum delay of 0.1 sec at ≤57.0 Hz and >61.7 Hz should be used. This will help ensure that the generator trips for the unintentional island condition.

Voltage and frequency relays must have a dropout time no greater than two cycles. Frequency relays shall be solid state or microprocessor technology; electro-mechanical relays used for this function are unacceptable.

9.1.4.4 Generator Relays

Except as specifically identified in these technical requirements, BPA does not have requirements for the type of protection used for a generator. Generator protection is the responsibility of the Requester. However, the protection should meet the general requirements of NERC and WECC Standards. The level of redundancy and overlap of protection schemes are determined by the Requester. BPA's primary concern with generator protection is that the protection is available to isolate a generator fault from the BPA Grid. Types of protection used to isolate a generator from the BPA Grid include:

- Percentage differential (87)
- Phase balance current (46)
- Phase sequence voltage (47)
- Reverse power (32)
- Thermal (49)
- Loss of field (40)
- Overspeed device (12)
- Transformer sudden pressure (63)

- Voltage controlled/restrained overcurrent (51-V)
- Volts per Hertz (overexcitation) (24)
- Neutral overvoltage (59-N)
- Under-, overvoltage relays (27, 59)*
- Under-, overfrequency relays (81)*

**The settings of 27, 59 and 81 relays must be reviewed and approved by BPA.*

9.1.5 *Remedial Action Schemes*

Connections to the BPA Grid may require participation in new or existing Remedial Action Schemes (RAS). BPA determines the RAS requirement during the interconnection studies. All interconnections involving new generation or loads more than 300 MW will always require installation of RAS equipment and communications for a single RAS algorithm, even if studies do not require RAS at the time of interconnection. All RAS must be fully compliant with NERC, WECC, RC and BPA requirements.

Minimum requirements for a BPA RAS include the following:

- Each RAS function always requires fully redundant RAS equipment, “RAS A” and “RAS B,” using diversely routed communications paths to avoid any credible single point of failure for that function.
- RAS requires dedicated and independent equipment and communications for each RAS being connected.
- RAS will utilize standardized alarms to identify operation actions and trouble.
- RAS will be designed with the ability to safely test the scheme.
- RAS will be provided with the ability to arm/disarm via SCADA

RAS must be tested regularly as directed by BPA personnel. RAS testing interval varies between 1 and 6 years based on scheme. BPA selects the timing of the RAS functional test during times of low transmission system stress in the area protected by the RAS, in order to minimize overall system impacts. As part of the RAS testing, the requester is required to provide test plan review, and test personnel as appropriate.

The Requester is required to provide sufficient rack space in their facilities to accommodate additional equipment for relaying, telecommunications, or RAS needed to facilitate the interconnection. BPA may require an enclosed, locked and alarmed area for its equipment.

9.1.5.1 Load Tripping

BPA may determine that the Requester needs to participate in RAS direct load tripping. Specific requirements and need will be addressed on a case-by-case basis as part of the interconnection study and review process.

9.1.5.2 Generation Tripping

New generation installations may be required to participate in any Remedial Action Scheme required to ensure reliability of the transmission system. BPA uses RAS generator tripping to maintain dynamic stability, voltage stability, and prevent transmission system overload. BPA arms and disarms generator tripping schemes

based upon system conditions. BPA RAS controllers will send generator tripping signals to the generators via redundant transfer trip channels. These schemes typically require a sequential events recorder.

It is strongly preferred as few breakers as possible are used for generator tripping, ideally as close as possible to the generating source, or at the generating source for facilities with a single generator.

If the generation is not in the BPA Balancing Authority (BA), additional RAS actions may be required to suspend that generator's BA Automatic Generation Control (AGC). This additional RAS action will require RAS standard equipment per BPA design. This additional requirement is determined on a case-by-case basis.

It is the plant operator's responsibility to develop and maintain procedures for plant restoration following a RAS action in accordance with BPA's Dispatcher Standing Orders (DSO).

9.1.5.3 Transmission Line Loss Detection Logic

Most BPA RAS are event driven RAS. The outage of any monitored element that would trigger RAS action, Transformers, Lines, etc. are required to be monitored and may require Line Loss detection Logic, (LLL) at both ends of the terminal. RAS monitoring is typically sensed by the position of the circuit breaker (52/b) auxiliary switch, isolating disconnect switch status, and also from the circuit breaker trip bus. Substation bus configuration and the type of protective line relaying will determine the exact requirements for implementing LLL. LLL sensing must be implemented at all terminals of the transmission line and be sent to the appropriate redundant BPA RAS controllers via diversely routed telecommunications paths, one path for RAS"A" and separate path for RAS "B".

9.1.5.4 Telecommunications Requirements for Remedial Action Schemes

The RAS described in this section requires telecommunications channels between the RAS controllers and the remote devices. The schemes will require redundant remote devices, redundant channels, and in most cases, geographically diverse communication paths. Specific details for telecommunications channels are in Section 10 Telecommunications Requirements.

9.1.5.5 Future Modifications or Revisions to Remedial Action Schemes

Any modification, change, or revision of an installed RAS scheme at a requester's site must be reviewed by BPA before it is implemented. Proposed changes may also require review and/or approval by Reliability Coordinators (RC), WECC and other impacted parties.

9.1.6 *Disturbance Monitoring*

Depending upon the type of connection, location, and operating voltage, disturbance monitoring equipment may be required. The monitoring equipment is intended to record system disturbances, identify possible protection scheme problems, and to provide power quality measurements. These measurements are necessary for BPA to perform required functions of system event analysis, power plant model validation and

situational awareness for transmission operations. Sequential event recorders (SER), digital fault recorders, (DFR) and dynamic disturbance recorders (DDR's, commonly called Phasor Measurement Units, or PMU's) may be required. BPA may require remote access to these recorders and relay systems at the POI. Computational Loads may require higher speed POW (Point on Wave) recording devices.

BPA requires PMU functionality at all generation and load projects equal or greater than 20 MW (aggregate) that are directly connected to the BPA grid. Interconnections at lower voltages will be addressed on a case-by-case basis. Note that for battery generating sources, the 20 MW requirement includes the full range of max load to max generation due to concerns about oscillations. For example, a battery facility with a range of -10 MW to +10 MW will be considered a 20 MW facility and will require a PMU.

PMU, SER DFR and POW device details can be found in BPA Standard STD-DC-000039, “Power system Monitoring and Recording.”

10. TELECOMMUNICATION REQUIREMENTS

10.1 Introduction

BPA requires installation of telecommunications facilities to fulfill the control, protection, operation, dispatching, scheduling, and revenue metering requirements of interconnections. In most cases BPA owns the telecommunications facilities. Third party ownership is permissible if the owner can satisfy BPA Planning’s requirements for Class of Service (internal BPA Telecommunications Guideline, *Telecommunications System Circuit Routing and Performance for Non-Packet Technologies*). At a minimum, telecommunications facilities must be compatible with and have similar reliability and performance characteristics to those currently used for operation of the power system to which the new generation or loads will connect. The Project Requirements Diagram (PRD) identifies telecommunications facilities and may require redundant equipment and geographically diverse paths. Depending on the Class of Service of the control and metering systems an interconnection requires, the telecommunications facilities may consist of any or all of the following:

10.2 Radio Systems

A radio system requires transmitters, receivers, telecommunication fault alarm equipment, antennas, batteries, chargers, and multiplex equipment. It may also include buildings, towers, emergency power systems, mountaintop repeater stations and their associated land access rights, as needed to provide an unobstructed and reliable telecommunications path. In order to meet power system reliability requirements, radio path diversity, equipment redundancy or route redundancy may be required. These measures protect against telecommunications outages caused by equipment failure or atmospheric conditions. BPA installs, owns, and operates radio systems that carry BPA control traffic in customer sites for all interconnections except by agreement with a utility subject to WECC reliability requirements. In the vicinity of wind turbines the use of radio systems may be limited because of interference from the turbine blades.

As part of the Interconnection Study, turbine locations will be required for the microwave path obstruction study.

10.3 Fiber Optic Systems

A fiber optic system requires light wave transmitters, receivers, telecommunication fault alarm equipment, multiplex equipment, batteries, chargers, emergency power systems, fiber optic cable (underground or overhead) and rights-of-way. In order to meet power system reliability requirements, cable route redundancy may be required.

Customer installations must not adversely affect the BPA communication system. To prevent impacts to BPA sites on a fiber ring by an outage or delayed restoration of either customer fiber cable or customer electronics, the following guidelines apply:

- Customer sites will not be added to BPA main rings.
- Subtend no rings optically from BPA nodes to non-BPA nodes. Refer to STD-DT-000088 and STD-DT-000089 for additional design requirements, including those pertaining to fiber cables, demarcation, and vault requirements. Refer to the Fiber Planning and Usage Guidelines for node installation guidelines.

10.4 Wireline Facilities

A wireline facility (e.g., leased line) requires telecommunications cable (underground or overhead), high-voltage isolation equipment, and rights-of-way. It may also include multiplex equipment, emergency power systems, and batteries, depending on the wireline technology employed. In order to meet power system reliability requirements, cable route redundancy may be required. Redundancy of the wireline communications is also required when utilized to meet protection requirements per Table 6 or control requirements in Section 9.

10.5 Voice Communications

10.5.1 *Basic Requirements*

A generation or load facility within the BPA Balancing Authority Area that requires any type of telemetering also requires voice communications to the operator. Use of the Public Switched Telephone Network (PSTN) is sufficient for facilities of 50 MW or less. Larger facilities may require addition of BPA's Dial Automatic Telephone System (DATS) lines or Automatic Ringdown Trunks to each BPA control center. If the facility is not staffed with operators, alternative arrangements with a scheduling or control agent may be made, subject to BPA approval.

10.5.2 *Automatic Ringdown Trunks*

The following facilities may require dedicated, direct automatic ringdown trunk or automatic trunk (AT) voice circuits between each appropriate BPA control center and the facility operator:

- Generators or loads of 50 MW or greater, at continuously staffed locations,
- Eccentric (non-conforming) generators or loads
- Generation or load that participate in BPA Remedial Action Schemes.
- A non-radial interconnection to another electric utility with a transfer capability in either direction of 50 MW or greater.

10.5.3 *Dial Automatic Telephone System – DATS*

The primary function of the DATS is to provide highly reliable voice communication between operational sites for operational purposes (see STD-DR-000040). An automatic ringdown trunk rings the far end upon taking the handset off-hook, which provides the generation plant direct access to BPA Dispatch for conditions that the SCADA RTU does not report. A DATS line may receive a busy signal, whereas an AT line always rings through.

10.5.4 *Independent Communications*

Provide independent voice communications for coordination of system protection, control and telecommunication maintenance activities between BPA and the generation facility or POI.

10.6 Data Communications

Telecommunications for SCADA, RMS and telemetering must function at the full performance level before and after any transmission system fault condition. Maintenance personnel must restore service continuity immediately after the transmission fault without the need for intervention by BPA staff. BPA's Power System Control & Communications team may require operational acceptance tests beyond those listed below, such as 30-day burn-in tests for new communications equipment. The following section specifies requirements for telemetry.

10.6.1 *SCADA*

For communication of SCADA information, one or more dedicated circuits are typically required between a new facility and both BPA control center(s).

10.6.2 *Automatic Generator Control (AGC) Interchange & Control Telemetering*

One or more dedicated circuits are typically required between the new generation facility and the appropriate Station SCADA or district data concentrator for AGC Interchange and control information for operations and scheduling applications. For transmitting the primary source of interchange real-time MW, BPA requires the use of telemetry from the interchange meter to the BPA Control Center via SCADA or district data concentrator. SCADA ICCP is not allowed as the primary source of telemetry for interchange real-time MW. If AGC services are required, data will be sent to and from the appropriate BPA control center(s) using the Inter-Control Center Communications Protocol (ICCP) See section 12.2.2.4 for more on applications of ICCP.

10.6.3 *General Telemetering*

General telemetering of power and energy data (in kW, kVAR, kWh) and data acquisition systems typically require one or more dedicated communication circuits. These circuits link the new facility to the master computer receiving the data. Refer to BPA STD-DC-000005, "Metering Application Requirements", and to Section 12 of this document.

10.6.4 *Revenue Metering System (RMS)*

Commercial dial-up telephone exchange line facilities or functional equivalent are required for BPA's Meter Data Collection (MDC). Refer to STD-DC-000005, and to Section 12 of this document.

10.7 Telecommunications for Control and Protection

Telecommunications for control and protection must function at the full performance level before, during and after any power system fault condition. The delivery of a false trip or control signal, or the failure to deliver a valid trip signal is unacceptable. Active telecommunication circuits for control and protection must not be tested, switched, shorted, grounded or changed in any manner by any worker, unless prior arrangements have been made through the BPA dispatcher. Control and protection functions on critical BES elements may be subject to additional BPA design requirements for redundant, alternately routed telecommunications.

10.7.1 *Speed of Operation*

Throughput operating times of the telecommunications system must not add unnecessary delay to the clearing or operating times of protection or RAS or AGC. System studies and WECC trip time requirements determine maximum permissible throughput operating times of control schemes.

10.7.2 *Equipment Compatibility*

Protection systems and supporting telecommunications equipment installed at the interconnecting facility must be functionally compatible or identical to the corresponding equipment employed at the BPA facility. This functionality need not extend to peripherals, such as signal counters and test switches that might be present on BPA's equipment. Teleprotection equipment employed by the Requester must be approved by BPA prior to installation. At the time of the request for interconnection BPA will supply the Requester with a list of acceptable, pre-qualified equipment. Should the Requester choose to employ equipment not on this list, BPA reserves the right to test the equipment for acceptable performance in the required control application. Equipment that passes this testing can be approved by BPA for subsequent installations.

Teleprotection systems, including transfer trip, must be properly designed and tested to demonstrate that they perform their intended functions. When applying digital telecommunications systems to protection schemes, care must be taken ensure equipment compatibility.

10.8 Telecommunications during Emergency Conditions

10.8.1 *Emergency Conditions*

Emergency telecommunications conditions may develop that affect telecommunications equipment with or without directly affecting power transmission system facilities.

Examples of telecommunications emergencies include the following:

- Interruption of power to telecommunications repeater and relay stations
- Telecommunications equipment failure, whether minor or catastrophic

- Interruption or failure of commercial, public switched telephone network facilities or services
- Damage to telecommunications facilities resulting from accident, acts of vandalism, or natural causes

Equipment redundancy and telecommunications route redundancy can protect against certain kinds of failure and telecommunications path interruption. A repair team dedicated to the telecommunications of the interconnecting facility should be retained along with an adequate supply of spare components.

10.8.2 *Backup Equipment*

Where commercial, public telephone network facilities or services support important power system telecommunications, a backup strategy should always be developed by the Requester to protect against interruption of such services. Backup methods could include redundant services, self-healing services, multiple independent routes, carriers and combinations of independent facilities such as wireline and cellular, fiber and radio, etc. Backup telecommunications system equipment such as emergency standby power generators with ample on-site fuel storage and reserve storage battery capacity must be incorporated in critical telecommunications facilities. Backup equipment should also be considered for certain non-critical telecommunications to provide continued operation of telecommunications during interruption of transmission services.

10.8.3 *Disaster Recovery*

The Requester should have a disaster recovery plan in place for telecommunications restoration that should be exercised periodically. The disaster recovery plan should include the ability to provide equipment capable of bypassing or replacing entire telecommunication stations or major apparatus until permanent repairs can be made.

10.8.4 *Telecommunications Security*

The operation of power system telecommunications facilities should be continuously monitored at a central alarm point so that problems can be immediately reported, diagnosed and repaired. Telecommunication sites and facilities should be secured against unauthorized access.

11. COMMISSIONING REQUIREMENTS

11.1 Pre-energization Inspection and Testing

The Requester is responsible for the pre-energization and testing of their equipment. For equipment that can impact the BPA Grid, the Requester shall develop an Inspection and Test Plan for pre-energization and energization testing. BPA may request to review the test plan prior to the test(s). BPA may require additional tests. The Requester shall make available to BPA, upon request, all available drawings, specifications, and test records of the POI equipment. Also, upon request BPA will make available to the Requester similar documents describing the BPA POI equipment.

11.1.1 *Installation and Commissioning Test Requirements for Metering*

BPA requires meter testing prior to commissioning. Refer to Section 13.5 and STD-DC-000005 for additional information.

11.1.2 *Installation and Commissioning Test Requirements for Protection Systems & RAS*

Thorough commissioning or installation testing of the protection system(s) and RAS is an important step for the installation of a new terminal or when changes to the protection system or RAS are made. The protection system includes the protective relays, the circuit breakers, instrument transformer inputs, controllers, and all other inputs and outputs associated with the protection or RAS scheme. The actual protection equipment used will determine the type and extent of commissioning tests required. Following are the minimum tests that must be performed on protection schemes at the POI that could affect the BPA Grid.

Testing similar to that listed in this section is also required immediately after modifications to a protection system or RAS are made. The extent of testing and types of tests required depend upon the changes made. Modifications include changes or additions to protection circuits, changes or upgrades of protective relay firmware, and changes in protective relay logic and/or programming, and adjustment to relay protective settings. When making protection system modifications, attention must be paid to any circuits that may be inadvertently affected (e.g.) an auxiliary relay having multiple circuits tied to its outputs.

11.1.2.1 Verify All Protective System Inputs

- Check for proper ratio, polarity, connections, accuracy, and appropriate grounding on current and voltage transformer circuits.
- Verify that shorting of unused current transformer windings is proper and that windings used for protection systems are not shorted.
- Verify that all other inputs to the protection system including battery supplies, circuit breaker auxiliary switches, pilot channel inputs, etc. are correct.

11.1.2.2 Verify Protection System Settings

- Check protection system settings and programming.
- Perform acceptance or calibration tests of the protection system if it was not performed previously.
- Verify that any changes in relay settings required for relay acceptance testing are restored to the desired settings.

11.1.2.3 Protection System Drawings and Wiring

- Verify switchboard panel wiring is intact and matches drawings.
- Verify interconnections between protection system and other devices are intact and match drawings.
- Verify that the drawings are correct.

11.1.2.4 Verify All Protective System Outputs

- Verify that all trip outputs will trip intended trip coil(s).
- Verify that all close outputs will properly close the breaker(s).
- Verify proper relays key the appropriate pilot channel.
- Verify other outputs such as breaker failure initiate, special protection scheme signals, reclose initiate and reclose block, relay alarms, event recorder points, and any other relay outputs to other equipment.

11.1.2.5 Perform Trip or Other Operational Tests

- Test correct operation of the overall protection systems.
- Test automatic reclosing.

11.1.2.6 Pilot Protection Schemes

- Measure channel delays.
- Test for noise immunity.
- Test for proper settings, programming, etc.
- Test transmit and receive levels.
- If automatic channel switching or routing is utilized, check for proper relay operation for alternate routing.

11.1.2.7 In Service, Load and Directional Tests

- Measure AC current and/or voltage magnitudes applied to the relay system.
- Measure AC current and/or voltage phase angles applied to the relay system.
- Test the relay system for proper directional operation when applicable.

11.1.2.8 Remedial Action Scheme Testing

- The RAS must be tested prior to energization. This includes an end-to-end test, functional test, or operational tests.
- The new RAS will be rolled into BPA's RAS test program under BPA's test frequency. The test frequency is based upon the most restrictive of BPA, WECC, or NERC rules.
- Many utilities now use coordinated end-to-end tests to verify the overall operation of the protection system and the pilot channel as part of their commissioning tests. This method is acceptable to BPA.

11.1.2.9 Monitoring equipment testing

* PMUs must be tested after configuration (but prior to installation) for compliance with IEEE C37.118 standard and WECC filtering and dynamic performance requirements

11.2 Technical Operations & Performance Testing Requirements

For additional commissioning requirement details for new generators and details about performance testing and model validation required prior to commercial operation, refer to supporting documents:

- STD-N-000001-01,"Required Voltage and Frequency Control Performance Commissioning Tests"

- STD-N-000001-02, "Generation Commissioning Milestones Required for Commercial Operations"
- STD-N-000001-03, "Generation Commissioning Task Checklist Required for Commercial Operations"
- STD-N-000001-04, "Generation Commissioning Process Flow for Commercial Operations"

After the equipment has been turned over to BPA Operations (Dispatch), then the generator can commence with the tests as described in STD-N-000001-01,"Required Voltage and Frequency Control Performance Commissioning Tests". See STD-N-000001-01 for commissioning test instructions.

12. COMMERCIAL OPERATIONS & METERING REQUIREMENTS

12.1 Data Requirements for System Operation and Scheduling

All transmission arrangements for power schedules within, across, into or out of the BPA Balancing Authority Area (BAA) require metering and telemetering. Some generators or loads that are in another BAA, referred to as a 'host' BAA, also require metering and telemetering to the BPA BAA. Transmission arrangements with loads, generators, or new transmission facilities may include voltage control, and automatic generation control (AGC). The WECC Reliability Coordinator for the region requires data to ensure the reliable operation of the entire grid. The technical plan of service for interconnecting a load, generator, or new transmission facility is shown on the BPA Project Requirements Diagram (PRD) and includes the metering and telemetering equipment consistent with the transmission contract, or BAA services agreement. Such metering and telemetering equipment may include options of being owned, operated, and maintained by BPA or by other parties approved by BPA. See STD-DC-000005 for more information. Telecommunications requirements for data collection are included in Section 10.

Revenue billing, system dispatching, operation, control, transmission scheduling and power scheduling each have slightly different needs and requirements concerning metering, telemetering, data acquisition, and control. Specific requirements also vary depending upon whether the new connection is physically connected to the BPA Grid or electronically connected via telemetering, placing the Project within the BPA BAA.

12.2 Telemetering Data Requirements for BPA Control Centers

BPA requires telemetering data for the integration of new interconnections at adjacent BAA boundaries (interchange), as well as new generation within the BPA BAA. This typically consists of the continuous telemetering of active power quantities (in kW) and hourly transmission of the previous hour's energy (in kWh) from the Point of Interconnection, (POI) to the appropriate BPA Control Center. Table 9 lists the typical uses of metering and telemetering data. Table 10 identifies general metering and telemetry requirements for interchanges. Table 11 and Table 12 identify general metering and telemetering requirements for loads and generation. Table 13 and Table 14 identify additional typical data requirements.

Table 9.— Typical Metering & Telemetering Data Usage

System or Quantity	BPA Dispatching and Operations	Transmission Scheduling	Revenue Billing
kW	Yes	No	No[1]
kWh	Yes[5]	Yes	Yes[4]
kVAR	Case-by-case	No	No
kVARh	Case-by-case[5]	No	Yes
kV	Yes[6]	No	No
Load Size	≥ 3 MW	≥ 1 MW	≥ 1 kW
Date Sample Rate	kW: 1 second or other approved rate compatible with NERC policy	Last hour kWh sent each hour	Hourly kWh data retrieved daily (RMS[2] type system)
Tie Capacity	All normally closed ties	All normally closed ties	All ties
AGC	Yes[3]	Yes[3]	No
Generation Reserves	Operating, spinning, regulating, & MW capability	Actuals as delivered	Actuals as delivered

Footnotes:

1. *A kW reading for revenue billing may be required where special transmission arrangements are necessary.*
2. *Direct Incoming Dial Public Switched Telephone Line or its equivalent required for RMS.*
3. *All BAA boundaries & customer connections providing ancillary services. For transmitting the primary source of interchange real-time MW, BPA requires the use of telemetry from the interchange meter to the BPA Control Center via SCADA. SCADA ICCP is not allowed as the primary source of telemetry for interchange real-time MW.*
4. *Revenue billing typically receives kWh via the MV-90 system.*
5. *Electric Industry Data Exchange (EIDE) data link is an alternative to acquire and share kWh and other hourly data between utilities.*

The kV system quantity is not required for generation connected to a host utility distribution system at or below 34.5 kV.

Table 10.— Metering, Telemetering and SCADA Data Requirements for Interchanges

Quantity	Interchange < 3 MW	Interchange > 3 MW
Billing Information [RMS]	Yes	Yes
kW Continuous Data	Yes	Yes
kV	Yes	Yes
KVAR	Yes	Yes
Redundant Meters	No	Yes

Table 11.— Metering, Telemetering and SCADA Data Requirements for Loads (L), Including Station Service, At the Meter Point and Inside BPA BAA

Quantity	Load < 1MW	Load ≥ 1MW
Billing Information [RMS[3]]; Hourly kWh & kVARh[2]	Yes If L ≥ 1 kW	Yes
Hourly Estimate of Load (by web, FAX, or phone)[1]	No	Yes[4]
kW Continuous Data	No	No[5]
kV	No	No[5]
kVAR	No	No[5]
Redundant Meters	No	No[5]

Footnotes:

1. *Hourly estimate of load must equal the sum of transmission schedules for delivered power.*

2. *Hourly integration of kVAR may be used for reactive billing if kVARh not available from meters.*
3. *Direct Incoming Dial Public Switched Telephone Line or its equivalent required for RMS.*
4. *Required from the scheduling agent to BPA.*
5. *Required as determined by Technical Operations or Planning studies.*

Table 12.— Metering, Telemetering and SCADA Data Requirements for Generation

System or Quantity	Gen < 3 MW	3 MW ≤ Gen < 50 MW	Gen ≥ 50 MW
Billing Information (RMS)[4,5]	Yes, if Gen >200 kW	Yes	Yes
Hourly Estimate of Generation[1] (by web, FAX, or phone)	Conditional[2]	Yes	Yes
Hourly kWh (telemetered)	No	Yes	Yes
kW Continuous Data[8,9]	No	Yes	Yes
Limit VER Generation (See Section 12.2.6)	No	Yes[6,7]	Yes[6,7]
MW & MVAR On Each Unit[3]	No	No	Yes If integrated at 230 kV or above
Redundant Meters (A & B)	No	Yes, If Gen > 20 MW	Yes
24/7 Real Time Operator	Conditional[10]	Yes	Yes
kV, kVAR, Circuit Breaker Status	No	Yes	Yes

Footnotes:

1. *Hourly estimate of generation must equal the sum of transmission schedules for marketed power. It is required from the scheduling agent to BPA*
2. *Hourly estimate is not required if generation is serving local load only. It is required if generation is being used as a marketing resource. Local load is defined as load that is on the generator side of the meter.*
3. *Separate meters for each unit are required when generators per line are not identical.*
4. *Station service metering is required for all generation, and station service telemetering may be required. See Sections 12.2.3 and 12.2.4.*
5. *For generating resources with nameplate rating greater than 200 kW and located in the BPA BAA, BPA revenue metering is required. Refer to the BPA Metering Application Requirements Standard for Generation Integration Metering. For generating resources 200 kW and less connected to a Host Utility (i.e. not directly connected to the BPA transmission grid), the Host Utility is responsible for the metering requirements.*
6. *Variable generation plants with aggregate nameplate rating between 3 and 50 MW may use BPA's alternative Integrated Curtailment & Reliability System Generation Advisor (iCRS Gen Advisor) communications (email and website) until the total variable generation connected to a single BPA POI equals or exceeds 70 MW. See Section 12.2.6.*
7. *Each technology type of generation (wind, solar, battery, fuel cell, etc.) at a facility requires separate metering and telemetering.*
8. *Continuous kW may be required if the capacity of a BPA-managed WECC path is impacted, even if outside BPA's BA and not connected to BPA's system.*
9. *Requester will be responsible for securing a telecommunications path to transmit this telemetry data to BPA per the PRD.*
10. *24/7 Real Time Operator may be required, as determined by BPAT operations.*

12.2.1 *Facilities Tied to the BPA BAA Boundary*

Telemetering is required for all normally closed interconnections at a BPA BAA boundary (interchange). For this case, telemetering of active power and energy (kW, kWh) is required. There may also be a need for reactive power (kVAR, kVARh) information for purposes of billing based on power factor. See **Error! Reference source not found.** for more information. High capacity interconnections may require redundant

metering and telemetering. For connections that are to be normally open, or closed only for emergencies, BPA determines telemetering needs on a case-by-case basis.

12.2.1.1 Loads within BPA BAA

For loads with direct electrical connections to the BPA BAA (i.e. are located inside the BPA BAA), AGC telemetering is not normally required. For interruptible loads, BPA determines telemetering needs on a case-by-case basis. Significantly large and intermittent loads (e.g. arc furnaces, irrigation pumps, electric draglines) may require an interface to the BPA AGC system. Existing practices throughout North America usually require a warning signal of pre-loading in order to ensure that adequate generation reserves are spinning before any sudden load change occurs. Table 11 summarizes metering, telemetering, and SCADA requirements for loads based upon size.

12.2.1.2 Telemetry for Generation Customers

Generation customers must have visibility of their real time MW, MVAR, MWH, and MVARH data that matches what BPA is receiving via BPA's generation meter(s). This enables clear coordination between BPA and the customer, avoiding confusion and upholding reliability. If either side loses visibility, generation could be limited to maintain reliability.

Generation customers are not required to obtain data from BPA generation meters. If generation customers have meters on the same CTs and PTs as the BPA generation meters, these meters could be used for their visibility and controls. If generation customers would like data from BPA's meters, the request must be provided to Customer Service Engineering during the Facility Study. Access to Customer Portal may also be requested for meter billing data.

12.2.1.3 Generation within BPA BAA

For generation connected internal to the BPA BAA, telemetering is required for generation facilities of aggregate output equaling or exceeding three MVA. For this case, telemetering of real power and energy (kW, kWh), and reactive power (kVAR, kVARh) is normally required. BPA will determine telemetering needs on a case-by-case basis for generation sites that remain below three MVA. Station service load may require separate telemetering if it comes from a different BAA. Each technology type of generation (wind, solar, battery, fuel cell, etc.) at a facility requires separate metering and telemetering. Examples are combinations of solar/battery, wind/solar, wind/battery, or solar/wind/battery. Table 11 summarizes metering, telemetering and SCADA requirements for generation within the BPA BAA.

All generation greater than or equal to 3 MVA are required to have a 24/7 real-time operator with contact phone number available to BPA system Dispatchers. BPA operations will determine if 24/7 operator is needed for generation less than 3 MVA. Any changes to the contact information of the plant or generation operator should be communicated to the BPA Transmission Account Executive at least 2 months prior to the change.

Metering and telemetering for temporary generation installations (planned for less than one year of service) will be determined on a case-by-case basis.

WECC requires any generation plant over 200 MVA to have data sent to the Extra High Voltage (EHV) Data Pool. BPA will provide the required data to the EHV Data Pool for any plant over 200 MVA in the BPA BAA unless the generator is a WECC member. In that case, the generator is responsible for reporting to the EHV Data Pool directly or via an agent.

12.2.1.4 DC Metering Requirements

When installing DC generators or energy storage systems, customers will

- Provide BPA aggregated DC metering data for each fuel type
- Provide an equation to calculate losses between the metering point and point of interconnection
- Submit DC meter test results to Customer Service Engineering to verify compliance with accuracy requirements

12.2.1.5 Jointly-owned Load or Generation

Telemetering for interconnection of shared or jointly owned loads or generation commonly use pseudo ties. These signals are usually a calculated portion of an actual metered value. The calculation may include adjustments for losses, changing ratios of customer obligations or shares, or thresholds and limits. In the instance of a pseudo-tie, the operational and procedural responsibility for a load/generation is a key. In addition to system control responsibility that is traditionally considered, the responsibilities related to a pseudo tie extend to such requirements as Disturbance Control Standard (DCS) recovery, load shedding, transmission and ancillary services, load forecasting, etc. associated with the load or generation. BPA uses the NERC recommended 'accumulator method' for accounting, not the 'rounding method' for integrated values.

12.2.1.6 Generation in BPA BAA Not Controlled by BPA

Telemetering is required for generation that is physically connected to the BPA transmission grid but which is not part of the BPA BAA to account for the scheduling that is required to deliver that energy to the appropriate host BAA. This type of generation would be modeled in both BPA and the host BAA AGC systems as a pseudo tie. The telemetering requirements are similar to interchange telemetering requirements.

12.2.2 *Data Requirements for BAA Services*

The following are the data requirements for BAA services if the Requester wishes to locate a load or generator in the BPA BAA. Technical discussions are necessary before the specific data requirements can be determined.

12.2.2.1 Supplemental AGC Service Requirements

If BPA is purchasing supplemental AGC services, AGC interface is required on a long-term basis. Prior to BPA purchasing supplemental services, an investigation into the capabilities, cost, and benefits of AGC control is required to determine the specific AGC requirements. Most supplemental services are scheduled and delivered using real-time dynamic signals, thus requiring telemetering.

12.2.2.2 Ancillary Service Requirements

Non-traditional sources are sometimes used for supplying ancillary services. If a load provides regulating or contingency reserve services, data requirements for deployment of the reserves will be similar to those applied to generating resources. To the extent that a third party may externally supply regulating or contingency reserve services at the BPA BAA interconnecting boundary, data requirements for their deployment may be similar to those applied to generating resources.

Ancillary Services requirements are also driven by how the interconnected customer chooses to meet these obligations. Either the Requester or the entity making the transmission arrangements is responsible for meeting obligations for necessary ancillary services associated with the interconnection. Most self-provided ancillary services are scheduled and delivered using real-time dynamic signals, which require telemetering. The responsible party may fulfill these obligations in any of the following ways:

- Directly provide ancillary services by making resources available to BPA to deploy
- Contract with a third party to make resources available to BPA to deploy
- Contract with BPA to cover this ancillary services obligation

The Requester must demonstrate that the selected options are technically sound and meet all relevant reliability policies and criteria of NERC, WECC and WPP or their successors as well as the BPA business practices.

Where a third party is providing ancillary services, the following data is required with a sampling rate established in BPA's business practices – typically four seconds between samples for regulation and ten seconds for operating reserves:

- Net instantaneous active power transferred (in MW)
- Instantaneous reactive power (in MVAR) and total reactive power (MVARh) transferred
- Operating reserve capability during the upcoming ten minutes
- kWh for most-recent hour
- Area Control Error (Station Control Error for Generating unit)
- Actual Scheduled Interchange

For generation resources inside the BPA BAA, Ancillary Services, (e.g. reserves) must be acquired. Provision for all Ancillary Services are specified in the Interconnection Agreement (LGIA or SGIA) or BAA Services Agreement (BAASA). BPA must specifically approve all arrangements for generators intending to provide Ancillary Services to BPA. If the generator is capable of providing Ancillary Services in excess of its obligation, then BPA may choose to contract with the generator operator to provide additional Ancillary Services.

If BPA is purchasing ancillary services from the generation facility, AGC control of the generator capability is required on a long-term basis. Prior to purchasing AGC services, a capabilities, cost, and benefit investigation as to the AGC control capabilities of the generation facility is required to determine the specific AGC requirements.

Requirements for Ancillary Services are also driven by how the generator operator or the purchaser chooses to meet the reserve obligations of the generation facility, as

described below. Either the generation operator or the entity making the transmission arrangements is liable for the reserve obligations associated with the operation of the generation facility consistent with the BPA Tariff. Generation marketed as interruptible power is treated separately under special provisions and guidelines by the WECC and BPA. The responsible party may fulfill these obligations in any of the following ways:

- Make these reserves available to BPA from the generating facility
- Make these reserves available to BPA from another one of their generation resources
- Contract with another generator operator to make these reserves available to BPA on their behalf
- Contract with BPA to cover this reserve obligation

12.2.2.3 SCADA Requirements

Additional data may be required from loads such as steel rolling mills and wind tunnels, in order to make generation control performance more predictable. Such additional data may include, but not be limited to, precursor signals of expected load changes. SCADA control may also be required. Specific requirements and needs are determined for each load. This may require a separate SCADA remote terminal unit or it may require data be added into an existing SCADA as determined by BPA.

New substations including those for generation facilities may require BPA SCADA control and status indication of the power circuit breakers and associated isolating switches used to connect with BPA. SCADA indication of real and reactive power flows and voltage levels are also required. If the connection is made directly to a host utility in BPA's Balancing Authority, SCADA control and status indication requirements shall be determined by BPA with consultation with the Host utility on division of responsibilities. SCADA control of breakers and isolating switches that are located away from the generating facility are not normally required, although status and indication may be necessary for system security purposes. Section 10 discusses telecommunications requirements for SCADA systems.

12.2.2.4 Dispatch and Data Requirements for Interconnected Generation

Dispatch and Data requirements for BAA services, such as regulation or operating reserves, apply only to generation resources inside the BPA BAA. For resources that are not part of BPA's BAA, the operator of the Host BAA determines the data requirements.

Inter-Control Center Communication Protocol (ICCP) is a standard communications protocol for data exchange used by BPA and many other entities. ICCP is an international standard for communications of real time data. The IEC 870-6 TASE.2 Standard defines the ICCP. The ICCP protocol is being revised to include certificate authentication and encryption for security purposes. When this package is available, all ICCP servers must be retrofitted. BPA uses SCADA ICCP. It is used to exchange SCADA data between BPA and other utilities and BAA operators. This form of data exchange uses public switched telecommunications services, not general internet communications.

A SCADA RTU is required for generation facilities greater than 50 MVA. Table 13 and Table 14 show the typical data and dispatch requirements for VER generators and Batteries.

Technical discussions between BPA and generator developers are necessary before the specific implementation requirements can be determined. For generation facilities with a total capacity of 50 MVA or above, SCADA RTU will generally be required to transmit automated Dispatch instructions and unit status, MW, MVAR and kV from the project, among other data requirements. For each project a detailed data requirements list with definitions will be provided during the design phase of the interconnection of the project. Actual generator specific data requirements are developed after an Interconnection Agreement or BAA Services Agreement is signed.

All interconnected generation projects are required to implement and maintain automatic voltage control on a voltage schedule provided by BPA Dispatchers. The status and availability of each auxiliary reactive support device is also required. Generation facilities are required to receive automated Dispatch instructions and provide other status and data as needed for the operation of the transmission system.

Table 13.— Generation Data Requirements for VERs, New Technologies and Batteries

Generation Plant to BPA Control Center(s):	
1.	Net instantaneous power output (MW) (BPA meter point)
2.	Net instantaneous MVAR output (BPA meter point)
3.	Instantaneous MVAR output of each collector line
4.	Instantaneous MW output of each collector line
5.	Instantaneous MVAR output of each reactive element (dynamic and switched)
6.	Voltage of each bus (kV) High side and each collector bus
7.	Available generation capability (MW) [1]
8.	Plant operation limit (MW) [2]
9.	Estimated Total MW Output (MW) [4]
10.	Plant high speed cutout (MW – wind only) (sum of all units out due to high winds)
11.	Automatic voltage control status (on/off), each controller
12.	Automatic voltage mode status (voltage/power factor), each controller
13.	Total plant MVAR capacity boost (MVAR) [3]
14.	Total plant MVAR capacity buck (MVAR) [3]
15.	Status of each generation and reactive element Breaker or switcher
16.	Status of each high side Breaker between generation and BPA system
17.	Acknowledge Limit Generation to Schedule
18.	Status of inverters blocking real/reactive power output (solar, batteries & type 3 or type 4 wind)
19.	Max/min calculated frequency by the inverters (Hz; solar & batteries)
20.	Max/min temperature of the inverters (ºF; solar & batteries)
21.	Status of grid island detection by the inverters (solar & batteries)
22.	State of charge/discharge for batteries
23.	Status of availability to generate for batteries
24.	Charge of batteries (MWh)
25.	Frequency Response provided by Generator (Calculated; MW)

Footnotes:

1. *Available generation capability is sum of all units in service available to generate times the MW rated capability of each unit.*

2. Plant operational limit is the MW amount the plant is limited to at any time less than the sum of the units available for generation (by BPA Dispatch or plant operator).
3. Total all units in service, available, net at POI.
4. Estimate from the EMS of MW production from the project based on current weather conditions for use in curtailed output operating conditions.

Table 14.— Generation Control and Data Requirements for VERs and Batteries

BPA Control Center(s) to Generation Plant:	
1.	Low Reserves Notification
2.	Limit Generation to Schedule– command (limit level 1, 2, etc.)
3.	Limit Generation to Schedule- MW Target amount
4.	Bus voltage schedule(s) in kV (future requirement for secondary voltage control)
5.	Dispatch trip control – to the agreed upon generation breaker
6.	Ramp limit initiated (Batteries Only)
7.	Frequency controller Dispatch initiated (future)

12.2.3 *Generation and Network Interchange Scheduling Requirements*

Any new load or generation being integrated into the BPA Grid must adhere to the scheduling requirements of the prevailing tariff under which it is taking transmission or BAA service from BPA. Customers may be required to provide BPA Transmission Scheduling with an estimate of their hourly load, hourly generation schedules, and/or net hourly interchange transactions. These estimates will be used for both pre-scheduling and planning purposes. BPA will require customers to provide these estimates as necessary in order for BPA to manage the load or resource balance within the BPA Control Area and to determine usage of the BPA Grid.

In the case of new transmission facilities, scheduling and accounting procedures are needed if the facility is part of an interface between the BPA Balancing Authority Area and another BAA. This scheduling and accounting of interchange between two BAAs normally requires telemetered data from the POI to the control centers of the BAA operators. This data is termed interchange metering and telemetering by BPA and includes kW and kWh quantities. BPA requires that all BAA transactions be pre-scheduled for each hour using the normal scheduling procedures. The end-of-hour actual interchange must be conveyed each hour to the BPA Control Center(s). This can be accomplished through the use of telemetering or data link.

When the new interconnection represents a shared or jointly owned interface to BPA, or a split resource between the BAA and any other, then a calculated allocation is usually required to divide up the total metered interchange. This non-physical interface is accomplished by dynamic transfer. A two-way dynamic signal is required when a combined request and response interface is used. An example is supplemental AGC services. A one-way dynamic signal is required when a response (or following) interface is used. Moving a BAA boundary is an example of this requirement.

12.2.3.1 <u>Generation Metering Requirements</u>

Generation metering usually consists of bi-directional meters and related communications systems providing active power (in kW) and energy (in kWh) from the POI. Active power is telemetered on a continuous basis for AGC and hourly energy is sent each hour to the BAA accounting for BPA. All generation projects of aggregate size

equaling or exceeding one MW require hourly pre-scheduling (Refer to Table 9 through Table 14). BPA may also require indication of available spinning reserve and controlled reserves, both in MW.

12.2.3.2 Interchange Metering Requirements

Interchange telemetering consists of bi-directional meters and related telecommunications systems providing kW and kWh at or near the POI. The kW measurement is telemetered on a continuous basis for AGC and hourly kWh is sent each hour to the control center. Interchange telemetering accuracy and calibration requirements are identical with those stated in Section 13.5.

12.2.3.3 Generation Parasitic Load, Station Service and Start-Up Metering

BPA requires generation projects to self-supply parasitic loads when generating. When not generating, the generation plant station service load may be served by backfeed over the transmission line that interconnects BPA and the generation plant. Generation plant station service and start-up loads must be properly and accurately metered. At a minimum, bi-directional revenue metering and extended range current transformers are required. In addition, separate dedicated instrument transformers and revenue meters may be required to measure station service and start-up loads. It is preferred to meter generation by locating bi-directional revenue meters and revenue accuracy current transformers such that accurate station service can also be metered. Then metering of net generation, start-up power and station service can be accomplished from a single location. However, if this is not possible, then metering with demand interval data recording revenue meters and communications is required at the station service transformer(s). Revenue meters and associated communications must be accessible to BPA's Meter Data Collection (MDC) software, formerly known as MV-90.

12.2.4 *Revenue and Interchange Metering System*

All facilities capable of exchanging at least 1 kW of active power and directly connected to the BPA transmission grid require BPA qualified metering for revenue and/or interchange Energy data recording is required for BPA's billing and scheduling functions. Revenue metering includes energy (kWh) and reactive power (kVARh) produced by revenue meters and recorded on a demand interval basis. Interchange metering includes bi-directional energy and reactive data as well as special telemetering requirements for scheduling purposes. The metering shall be located to measure the net power at the POI to and from the BPA Grid.

The revenue metering system (RMS) includes a remote metering system to record the hourly kWh data. The hourly kWh data is downloaded from the metering recorder on a daily basis over voice-grade telephone lines. All recorders must be fully compatible with the BPA's MDC software, formerly known as MV-90. Upon request, MDC or functional equivalent data is available to the customer or its agent.

For detailed revenue and interchange metering requirements, refer to STD-DC-000005. Three-element, three-phase, four-wire meters shall be used on grounded power systems. Two-element, three-phase, three-wire meters can be used on balanced, ungrounded power systems. Both revenue metering and interchange metering shall be bi-directional to record both active and reactive power flows to or from the POI.

Metering packages include a kWh recording device compatible with the BPA RMS or BPA scheduling system, as applicable.

Table 11 and Table 12 identify revenue metering requirements. Section 10.6.4 discusses telecommunications requirements for the RMS system.

12.2.5 *Calibration of Metering, Telemetering, and Data Facilities*

12.2.5.1 Calibration of Revenue and Interchange Metering

Revenue and interchange metering must be calibrated at least every two years. More frequent calibration intervals may be negotiated. All parties to the transmission interconnection agreement may witness the calibration.

12.2.5.2 SCADA and ICCP Data

SCADA and ICCP data shall be calibrated every two years as a minimum or more often if significant errors occur affecting the state estimator results. All parties to the transmission interconnection agreement may witness the calibration.

12.2.6 *VER Generation Remote Dispatch and Data Requirements*

12.2.6.1 Operational Controls for VER Generation

All VERs with a nameplate capacity 3 MW or greater within the BPA BAA are required to participate in BPA's Operational Controls for Balancing Reserves (OCBR) as explained in Section 6.

For VER projects with aggregate nameplate capacity between 3 MW and 50 MW, the designated Generator Operator (GOP) responsible for control of the VER is required to either receive automated email messages and obtain access to BPA's web-based software application, Integrated Curtailment & Reliability System Generation Advisor, (iCRS Gen Advisor), or receive digital and analog signals via protocol connection to a BPA installed SCADA RTU at the project site. BPA's web-based software application is available to the generation owner and GOP for all VER projects 3 MW or greater.

VER projects with aggregate nameplate capacity 50 MW and greater, and VERs regardless of size that interconnect at a common BPA POI with 70 MW or greater aggregate generation shall be required to receive digital and analog signals directly via a BPA installed SCADA RTU at the project site.

Regardless of the communications technology employed, the BPA Dispatcher will issue automated Dispatch instructions to the VER project operator during those times when generation output must be limited, and the project operator will be responsible to limit total plant output to the limit issued by BPA Dispatch (see Section 12.2.3).

12.2.6.2 VER Generation Controls with Automated Dispatch

All VER projects constructed after 6/1/2011 and capable of generating greater than 50 MW are required to have the capability to respond to over-frequency and under-frequency (governor type) control and separate ramp rate control. BPA policies will be developed to address older projects when the need is determined.

As more VER generation connect to the BPA system, the amount of dispatchable generation providing frequency response for system events is reduced. In the future,

BPA may need to require VER generation to provide frequency response during system situations where VERs provide a majority of the generation. For wind, this is most likely to occur at high wind-low load times at night. Providing wind generation feathering to reduce over-frequency, or when enabled to feather wind generation in advance to provide an ability to increase generation for an under-frequency event may be warranted as the least cost or preferred option to address this operational issue.

Likewise, VER ramps rate limitations may be necessary as the VER fleet continues to expand to address severe ramps impacting balancing service capability or the AGC generating units. See section 12.2.3 for interchange requirements. When BPA system conditions warrant, BPA will announce a program to install automated dispatch and work with the VER fleet to implement either of these systems.

12.2.6.3 Wind and Solar Generation Forecasting Data Requirements

BPA requires operational and forecasting data from the customer project. Specific data points will be determined during design.

12.2.6.4 SCADA Indication and Control of breakers for VER and New Technologies

For VER and New Technology projects with aggregate nameplate capacity greater or equal to 3 MVA, BPA requires SCADA indication and control of the breakers at the generation site to be able to disconnect the project as needed for reliability. For plants with multiple technology types (wind, solar, battery, fuel cell, etc.), BPA prefers separate control of each technology type when applicable. DC connected multiple technology types are not subject to separate breaker control requirements but still must comply with SCADA indication and control requirements. No more than 5 breakers at a project site shall be set up for SCADA Indication and Control to drop a generation site under the same Energy Management System controller. If more than 5 breakers are used for the feeders at a project site, then breakers on the low side of the main step-up transformers shall be installed with SCADA Indication and Control. BPA Dispatchers only trip a generation site; they will not re-energize the site. Dispatch will notify the generator operator when BPA has given permission for the generator to re-connect to the grid.

12.3 Voltage Schedules

Voltage schedules are necessary, in order to maintain optimal voltage profiles across the transmission system. Optimal profiles minimize transmission of reactive power and preserve flexibility in use of reactive-power control facilities. To this end, a voltage schedule will be mutually developed between BPA and the Requester, which will be coordinated via time changes developed by the WPP for such coordination purposes. Deviations from the voltage schedule may be ordered by the BPA Dispatcher. Usually, the deviations are due to load changes occurring earlier than the WPP coordinated schedule. The Interconnector is required to maintain the generator voltage schedule (within the Interconnector's plant capabilities, including external reactive devices) once a voltage schedule is established for the POI. Interconnector's voltage control design must adhere to requirements in Section 6.4.2.

12.4 Reactive Power

Each entity shall provide, at a minimum, for its own reactive power requirements, at both leading and lagging power factors unless otherwise specified by BPA. BPA generally requires customers to exchange reactive power with BPA's system at POI to maintain the POI voltage schedule (within the Interconnector's plant capabilities, including external reactive devices). This can be accomplished by installing equipment to allow matching of internal supply and demand of reactive power. Closely coupled generators may also receive telemetered voltage schedules or receive the voltage schedule through ICCP to minimize VAR conflict (See Section 12.2). Minimizing flow of reactive power on a given line can increase its transfer capability and reduce its losses. Reactive flows at interchanges between Balancing Areas should be kept at a minimum. Interconnector's reactive power control design must adhere to performance requirements in Section 6.4.

12.5 Power System Disturbances and Emergency Conditions

12.5.1 *System Frequency during Disturbances*

Power system disturbances initiated by system events such as faults and forced equipment outages, expose the system to oscillations in voltage and frequency. It is important that lines not directly tripped due to the disturbance remain in service for dynamic oscillations that are stable and damped.

Large-scale blackouts can result from the excessive loss of generation, outage of a major transmission facility, or rejection of load during a disturbance. In order to prevent such events, under frequency load shedding (UFLS) has been implemented throughout WECC, including the Pacific Northwest. When system frequency declines, discrete blocks of load are automatically interrupted by frequency relays, with most of the interruptions initiated between 59.3 Hz and 58.6 Hz. This load shedding scheme attempts to stabilize the system by balancing the generation and load. It is important that lines and generators remain connected to the transmission system during frequency excursions, both to limit the amount of load shedding required and to help the system avoid a complete collapse. The limited ability of some generators to withstand off-nominal frequency operation has been taken into account in the development of frequency relay setting delays provided in Section 9.

New Line Load Interconnections (LLIR) of 20 MW or greater will be required to arm a minimum of 34% of their load to participate in the BPA UFLS program to meet the NERC Reliability Standard PRC-006.

12.5.2 *Local Islands*

For those generators interconnected to the BPA Grid through a tapped transmission line, a local island is created when the breakers at the ends of the transmission line open. This leaves the generator and any other loads that also are tapped off this line isolated from the power system. Delayed fault clearing, overvoltage, ferroresonance, extended undervoltages, etc., can result from this local island condition and shall not be allowed to persist. Special relays and relay settings are often required to rapidly disconnect the generator(s) in the local island. See Section 9.1.2.2.4.

12.5.3 *Responsibilities during Emergency Conditions*

Each BAA operator is ultimately responsible for maintaining system frequency within BAA boundaries. All emergency operation involving the BPA transmission system must be coordinated with the BPA Dispatcher. Each party, as appropriate, must participate in any local or regional remedial action schemes. All loads or generators tripped by underfrequency or undervoltage action must not be restored without the BAA operator's permission. All schedule cuts need to be promptly coordinated with the appropriate BAA operator. All parties have the responsibility for clear communications and to report promptly any suspected problems affecting others.

12.6 Data Requirements for Transmission Grid Modeling

In order for BPA to allow commercial operations, all technical electrical data reporting requirements in section 5.3 must be met for all "as built" projects. Requester must completely reply to all BPA's MOD-032 and FAC-008 Data Request Forms in accordance with BPA Grid Modeling formats before being released for commercial operation.

13. MAINTENANCE REQUIREMENTS

13.1 Outage Planning

The Requester's facilities may be part of or connected to key transmission lines that must be kept in service as much as possible. They may be removed from service only after power flow studies indicate that system reliability will not be degraded below acceptable levels (in accordance with WECC, the Reliability Coordinator, and NERC IRO-017 requirements on regional Outage Coordination). The entity responsible for operating such transmission line(s) shall promptly notify other affected control areas, per the WECC Procedure for Coordination of Scheduled Outages and Notification of Forced Outages "Dispatcher/System Operator Handbook" when removing such facilities from and returning them back to service.

The Requester shall not energize any de-energized BPA equipment unless the BPA Dispatcher specifically approves the energization. Where the connection is to a radial load the circuit may be interrupted and reclosed by BPA. In cases where the interconnection taps or breaks an existing BPA line, an auto isolation scheme may be required to maintain service continuity of the BPA line. If the interconnected facilities are networked or looped back to the BPA Grid or where generation resources are present, a switching device must open to eliminate fault contributions or neutral shifts. Once open, the device must not reclose until approved by the BPA Dispatcher or as specified in the interconnection agreement.

13.2 Switchable Devices

Devices frequently switched to regulate transmission voltage and reactive power shall be switchable without de-energizing other facilities. Switches designed for sectionalizing, loop switching, or line tripping shall be capable of performing their duty under heavy load and maximum operating voltage conditions.

13.3 Frequency and Duration of Outages

Planned outages of significant system equipment shall be coordinated with all affected parties to minimize their impact on the remaining system. The operator of the Requester's facilities should respond promptly to automatic and forced outages in order to mitigate any impacts on the remaining system, and in a manner that treats all interruptions with the same priority.

13.4 Inspection, Test, Calibration and Maintenance

Transmission elements (e.g. lines, line rights of way, transformers, circuit breakers, control and protection equipment, metering, and telecommunications) that are part of the proposed connection and could affect the reliability of the BPA Grid need to be inspected and maintained in conformance with regional standards. The Requester has full responsibility for the inspection, testing, calibration, and maintenance of their equipment, up to the location of change of ownership or POI. Transmission Maintenance and Inspection Plan (TMIP) requirements are a portion of the WECC Reliability Management System for Transmission. The Requester or utility may be required by WECC to annually certify that it has developed, documented, and implemented an adequate TMIP.

13.4.1 *Summary of the WECC Transmission Maintenance and Inspection Plan (TMIP)*

WECC requires that member utilities prepare a written description of, and update as necessary, its annual TMIP. The TMIP shall provide descriptions of the various maintenance activities, schedules and condition triggers for performing the maintenance, and samples of any checklist, forms, or reports used for maintenance activities. The TMIP may be performance-based, time-based, or both, as may be appropriate. The TMIP shall address each of the following:

- Include the interval schedule (e.g., every two years) for any time-based maintenance activities and a description of conditions that will initiate any performance-based activities.
- Describe the maintenance and inspection methods including specific details for each activity or component listed below.
- Provide any checklists, forms, or reports used for maintenance activities.
- Where appropriate, provide criteria to be used to assess the condition of a transmission facility or component.
- Where appropriate, specify condition assessment criteria and the requisite response to each condition as may be appropriate for each specific type of component or feature of the transmission facilities.

13.4.2 *Transmission Line Maintenance*

The TMIP shall, at a minimum, describe the maintenance practices for all applicable transmission line activities, including the following:

- Patrols and inspections
- Vegetation management and right-of-way maintenance
- Contamination control (e.g. insulator washing)

13.4.3 *Station Maintenance*

The TMIP shall describe the maintenance practices for all applicable station facilities:

- Switchgear, i.e. circuit breakers, circuit switchers, disconnect switches
- Power transformers, shunt reactors phase-shifting transformers, station service transformers, and instrument transformers
- Reactive devices (including, but not limited to, shunt capacitors, series capacitors, synchronous condensers, series reactors, and current limiting reactors)
- Voltage Regulators
- Protective relay systems and associated communication equipment
- Remedial Action schemes and associated communication equipment

13.4.4 *Maintenance Record Keeping and Reporting*

Maintenance records of all maintenance and inspection activities shall be retained for at least five years. The records of maintenance and inspection activities shall be made available to the WECC or other regulatory body, as requested, to demonstrate compliance with the TMIP. The transmission owner shall maintain and make available on request, records for substantial maintenance or inspection of the items listed above.

The maintenance and inspection records shall, at a minimum:

- Identify the person(s) responsible for performing the work or inspection
- Indicate the date(s) the work or inspection was performed
- Identify the transmission facility
- Describe the inspection or maintenance that was performed

13.5 Calibration and Maintenance of Revenue and Interchange Metering

Refer to STD-DC-000005. Revenue and interchange metering will be calibrated at least every two years. Other calibration intervals may be negotiated. All interested stakeholders or their representatives may witness the calibration test. Calibration records shall be made available to all interested stakeholders.

Each meter shall be calibrated against a standard or reference instrument or meter that has been calibrated and certified during the preceding twelve months. Calibration of standard meters and instruments must meet accuracy requirements of the National Institute of Standards and Technology.

13.6 Synchronizing

The Requester's system or portion of system with energized generators must synchronize its equipment to the BPA Grid using automatic synchronizers or synchronizing check relays (IEEE C.37 Device 25A). Synchronization shall be supervised by a separate synchronizing check relay (IEEE C.37 Device 25A). The exception to this is under large-scale islanding conditions, where the BPA Dispatcher will re-synchronize the BPA grid to neighboring systems over major interties. Please refer to Sections 9.1.2.2.6 and 9.1.4.2 for specific requirements regarding synchronizing and reclosing.

14. QUALIFIED CHANGE

NERC standard FAC-002-4, Facility Interconnection Studies, requirement 6 (R6) states that each Planning Coordinator shall maintain a publicly available definition of qualified change for the purposes of facility interconnection. Prior to a qualified change taking place the facility owner must notify BPA of the qualified change and meet all interconnection requirements applicable to the qualified change. BPA will review the qualified change and determine the interconnection requirements applicable. If you have a change that meets this definition, please contact the BPA Interconnection Administrator via email at: csrp@bpa.gov. BPA will contact you within 45 calendar days to set up a meeting to discuss the specifics and determine next steps.

Qualified changes in BPA's PC footprint shall only apply to previously studied or actively studied Requests for Interconnection in the BPA PC footprint, e.g., only applicable line/load Interconnection request, generation interconnection requests, or affected system requests (LLIR, SGIR, LGIR or AUSS). Changes to BES elements outside of an explicit LGIP, SGIP or LLIP request are out of scope. Such BES changes are sufficiently addressed via NERC standards such as MOD-031 and MOD-032 data sharing protocols.

14.1 Qualified Change for Generation Facilities and Energy Storage Facilities

Any Generating Facility seeking to modify a generator or energy storage system that is connected to the BPA transmission system, that includes but is not limited to:

Table 15.— Qualified Changes for Generation

Category	Examples from NERC Implementation Guidance
Change in Generator Output	Change that affects its Seasonal Real Power or Reactive Power capability by more than 10 percent of the last reported and/or verified capability and change is expected to last more than six months. Change in power factor capability of the generator

Change of GSU	Change of GSU that results in any of the following differences:
	• Reduction in rating by more than 10%
	• Impedance change by more than 10%
	  ○ Change in transformer losses
	  ○ Change in transformer saturation differences

Change in Generator Characteristics	Change in the inertia of the Generator by more than 10% (synchronous generators only) Change in steady state transient and sub-transient reactance of the Generator or generator Interconnection Facilities by more than 10% (synchronous or induction generators only) Transmission Planner requested Generator facility projects in MOD-027 or MOD-026 resulting in changes that alter the equipment response characteristic. Changes to a generator's electromagnetic transient models Change of 5% or more of the plant to an alternate production profile

Change in Protection System of the generator facilities or generator interconnection facilities	Changes in relay settings as required in PRC-024 R3 to report changes or limitations to Transmission Planner and Planning Coordinator within 30 days. • include high and low frequency settings along with delay times if applicable • include high and low voltage settings along with delay times if applicable
Inverter Based Resource (IBR) Only: Change in Inverter or inverter settings or to the Power Plant Controllers	Change of 10% or more of the inverter-based resource units at a facility that is not replacement in-kind Adding 5% or more battery energy capacity Change to any Power Plant Controller setting or firmware resulting in a difference in: • frequency or voltage support of the IBR • a difference in when the IBR discontinues current injection to the GRID (i.e. blocking commands)
Unplanned change in governor or governor settings	Uncharacteristic changes that result in how the generator responds to grid frequency deviations and is expected to last more than six months.
Unplanned change in exciter or exciter settings	Uncharacteristic changes that result in how the generator responds to grid voltage deviations and is expected to last more than six months
Change in power system stabilizer	Addition or removal of power system stabilizer Setting changes of power system stabilizer

14.2 Qualified Change for Interconnection Transmission Facilities

Any Modification to existing transmission facilities external to BPA that do not meet the requirements in the line and load business practices (LL BP), that includes but is not limited to:

Table 16.— Qualified Changes to Existing Interconnections of Transmission

Category	Examples from NERC Implementation Guidance
Change in Rating	Change in the facility thermal rating by greater than 5% Change in the facility impedance by greater than 5% Change in facility voltage class
Change in Protection Coordination	Change in the protection coordination that would alter the way a facility would switch
Change in topology	Change in topology that would alter power flows on the BES

14.3 Qualified Change for End-User Facilities

Any end-user Facility seeking to modify a previously interconnected load or interconnected load service facility, that includes but is not limited to:

Table 17.— Qualified Changes to End-User Facilities (Load)

Category	Examples from NERC Implementation Guidance
Increase in Demand	Annual increase in Demand exceeding 10%
Addition of equipment that would significantly impact	Installation of a motor 1,000 hp or larger where no motors previously existed; or

Category	Examples from NERC Implementation Guidance
the composite load model used to represent a Facility	Addition of a motor exceeding the size of all other motors connected within a Facility with at least 500 hp of motors
Changes in protection schemes or settings	Changes in settings for under-frequency load shedding
Changes in Harmonic levels	Addition or removal of steel casting or steel smelter loads
A change in end-user Facility topology that may affect power flows on the BES	Changes to interruptible loads being interrupted during peak load periods Addition of distributed energy resources (DER) more than 0.5MW at a distribution substation

15. REFERENCES

American National Standards Institute (ANSI). C84.1, Electric Power System and Equipment – Voltage Ratings (60 Hz). New York, New York.

American National Standards Institute/Institute of Electrical and Electronics Engineers (ANSI/IEEE). Accredited Standards Committee C2, National Electrical Safety Code (NESC®). New York, New York.

American National Standards Institute/Institute of Electrical and Electronics Engineers (ANSI/IEEE). Std. 421.1, IEEE Standard Definitions for Excitation Systems for Synchronous Machines. New York, New York.

Bonneville Power Administration (BPA), U.S. Dept. of Energy. Accident Prevention Manual (APM). Portland, Oregon.

Bonneville Power Administration (BPA), U.S. Dept. of Energy. Internal Telecommunications Guideline, Telecommunications System Circuit Routing and Performance for Non-Packet Technologies. Portland, Oregon.

Bonneville Power Administration (BPA), U.S. Dept. of Energy. Open Access Transmission Tariff – DOE/BPA-3406. Portland, Oregon.

Bonneville Power Administration. BPA Policy 432-1, Safeguards and Security Program. Portland, Oregon.

Bonneville Power Administration (BPA), U.S. Dept. of Energy. STD-DC-000005, “Metering Application Requirements.” Portland, Oregon.

Bonneville Power Administration (BPA), U.S. Dept. of Energy. STD-DC-000032, “Fuse Sizing Policy for Category II and III Power Transformers.” Portland, Oregon.

Bonneville Power Administration (BPA), U.S. Dept. of Energy. STD-DR-000040, “Telecommunications Dial Automatic Telephone System (DATS) Policy.” Portland, Oregon.

Bonneville Power Administration (BPA), U.S. Dept. of Energy. STD-DS-000009, "Substation Grounding." Portland, Oregon.

Bonneville Power Administration (BPA), U.S. Dept. of Energy. STD-DT-000024, "Transmission Line Grounding Standard." Portland, Oregon.

Bonneville Power Administration (BPA), U.S. Dept. of Energy. STD-DT-000062, "BPA ROW Width Policy 1991." Portland, Oregon.

Bonneville Power Administration (BPA), U.S. Dept. of Energy. STD-DT-000064, "Transmission Line Lightning Protection." Portland, Oregon.

Bonneville Power Administration (BPA), U.S. Dept. of Energy. STD-DT-000088, "Application Guide for Fiber-Optic Cable Placement and Usage." Portland, Oregon.

Bonneville Power Administration (BPA), U.S. Dept. of Energy. STD-DT-000089, "Fiber-Optic Cable Vault, Enclosure, and Splicing Standard." Portland, Oregon.

Bonneville Power Administration (BPA), U.S. Dept. of Energy. STD-N-000001-01, Supporting Document: "Required Voltage and Frequency Control Performance Commissioning Tests." Portland, Oregon.

Bonneville Power Administration (BPA), U.S. Dept. of Energy. STD-N-000001-02, Supporting Document: "Generation Commissioning Milestones Required for Commercial Operations." Portland, Oregon.

Bonneville Power Administration (BPA), U.S. Dept. of Energy. STD-N-000001-03, Supporting Document: "Generation Commissioning Task Checklist Required for Commercial Operations." Portland, Oregon.

Bonneville Power Administration (BPA), U.S. Dept. of Energy. STD-N-000001-04, Supporting Document: "Generation Commissioning Process Flow for Commercial Operations." Portland, Oregon.

Bonneville Power Administration (BPA), U.S. Dept. of Energy. STD-N-000001-05, Supporting Document: "Interconnection Model Requirements." Portland, Oregon.

Bonneville Power Administration (BPA), U.S. Dept. of Energy. STD-N-000003, "Substation Equipment Arrangement Application." Portland, Oregon.

Bonneville Power Administration (BPA), U.S. Dept. of Energy. STD-N-000011, "Equipment Ownership Requirements." Portland, Oregon.

Bonneville Power Administration (BPA), U.S. Dept. of Energy. "Interconnection Business Practices". BPA Transmission public website.

https://www.bpa.gov/transmission/Doing%20Business/Interconnection/Pages/interconnection-business-practices.aspx. (Accessed January 1, 2021)

Department of Homeland Security. Presidential Directive 12 (HSPD-12). Washington, D.C.

Federal Energy Regulatory Commission (FERC). Docket No. RM16-1-000; Order No. 827, "Reactive Power Requirements for Non-Synchronous Generation." Washington, D.C.

Federal Energy Regulatory Commission (FERC). Docket No. RM16-6-000; Order No. 842, "Essential Reliability Services and the Evolving Bulk-Power System—Primary Frequency Response." Washington, D.C.

Federal Energy Regulatory Commission (FERC). Docket No. RM17-8-000; Order No. 845, "Reform of Generator Interconnection Procedures and Agreements." Washington, D.C.

International Electrotechnical Commission. 870-6 TASE.2, Inter-Control Center Communication Protocol (ICCP) Standard. Geneva, Switzerland.

International Electrotechnical Commission. 61000-3, Electromagnetic Compatibility (EMC) Limits for Harmonic Current Emissions. Geneva, Switzerland.

International Electrotechnical Commission. 61000-4, Electromagnetic Compatibility (EMC) Electrostatic Discharge Immunity Test. Geneva, Switzerland.

Institute of Electrical and Electronic Engineers (IEEE). IEEE-100, The Authoritative Dictionary of IEEE Standards Terms. New York, New York.

Institute of Electrical and Electronic Engineers (IEEE). Std. 142, Foundation for Grounding. New York, New York.

Institute of Electrical and Electronic Engineers (IEEE) Std. 421.2, IEEE Guide for Identification, Testing, and Evaluation of the Dynamic Performance of Excitation Control Systems. New York, New York.

Institute of Electrical and Electronic Engineers (IEEE). Std. 519, IEEE Recommended Practices and Requirements for Harmonic Control in Electrical Power Systems. New York, New York.

Institute of Electrical and Electronic Engineers (IEEE). Std. 1100, Recommended Practice for Powering and Grounding Electronic Equipment. New York, New York.

Institute of Electrical and Electronic Engineers (IEEE). Std. 1159, Recommended Practice for Monitoring Electric Power Quality. New York, New York.

Institute of Electrical and Electronic Engineers (IEEE). Std. 1547, Interconnecting Distributed Resources with Electric Power Systems. New York, New York.

Institute of Electrical and Electronic Engineers (IEEE). Std. C37.118, Enclosed Field Discharge Circuit Breakers for Rotating Electric Machinery. New York, New York.

Institute of Electrical and Electronic Engineers (IEEE). Std., C57.116, Guide for Transformers Directly Connected to Generators. New York, New York.

National Environmental Policy Act (NEPA). 42 U.S.C. & 4321 et seq. Washington, D.C.

North American Electric Reliability Corporation (NERC). BAL-003-1, Frequency Response and Frequency Bias Setting Standard. Atlanta, Georgia.

North American Electric Reliability Corporation (NERC). FAC-002-4, Facility Interconnection Studies. Atlanta, Georgia.

North American Electric Reliability Corporation (NERC). FAC-008, Facility Ratings. Atlanta, Georgia.

North American Electric Reliability Corporation (NERC). MOD-025, Verification and Data Reporting of Generator Real and Reactive Power Capability. Atlanta, Georgia.

North American Electric Reliability Corporation (NERC). MOD-032, Data for Power System Modeling and Analysis. Atlanta, Georgia.

North American Electric Reliability Corporation (NERC). Operating Committee Reliability Guideline: IC Requirements for BPS-Connected IBRs. Atlanta, Georgia.

North American Electric Reliability Corporation (NERC) Planning Committee (PC) Task Force on Inverter-Based Resource Performance (IRPTF). "Planning Committee Summary of Activities for BPS-Connected IBR and DER". NERC PC Webpage. https://www.nerc.com/comm/PC/Documents/Summary_of_Activities_BPS-Connected_IBR_and_DER.pdf (Accessed January 1, 2021)

North American Electric Reliability Corporation (NERC) Planning Committee (PC) Task Force on Inverter-Based Resource Performance (IRPTF). "Resource Loss Protection Criteria Assessment". NERC PC Webpage. https://www.nerc.com/comm/PC/InverterBased%20Resource%20Performance%20Task%20Force%20IRPT/IRPTF_RLPC_Assessment.pdf (Accessed January 1, 2021)

North American Electric Reliability Corporation (NERC) Planning Committee (PC). "Technical Report: BPS-Connected Inverter-Based Resource Modeling and Studies". NERC PC Webpage.

https://www.nerc.com/comm/PC/InverterBased%20Resource%20Performance%20Task%20Force%20IRPT/IRPTF_IBR_Modeling_and_Studies_Report.pdf (Accessed January 1, 2021)

North American Electric Reliability Corporation (NERC) Operating Committee (OC). "Reliability Guideline: BPS-Connected Inverter-Based Resource Performance". NERC Reliability and Security Guidelines webpage. https://www.nerc.com/comm/OC_Reliability_Guidelines_DL/Inverter-Based_Resource_Performance_Guideline.pdf (Accessed January 1, 2021)

North American Electric Reliability Corporation (NERC) Operating Committee (OC). "Reliability Guideline: Improvements to Interconnection Requirements for BPS-Connected Inverter-Based Resources". NERC Reliability and Security Guidelines webpage. https://www.nerc.com/comm/OC_Reliability_Guidelines_DL/Reliability_Guideline_IBR_Interconnection_Requirements_Improvements.pdf (Accessed January 1, 2021)

North American Electric Reliability Corporation (NERC). PRC-006, Automatic Underfrequency Load Shedding. Atlanta, Georgia.

North American Electric Reliability Corporation (NERC). PRC-023, Transmission Relay Loadability. Atlanta, Georgia.

North American Electric Reliability Corporation (NERC). PRC-024, Generator Frequency and Voltage Protective Relay Settings. Atlanta, Georgia.

North American Electric Reliability Corporation (NERC). PRC-026, Relay Performance During Stable Power Swings. Atlanta, Georgia.

United States Department of Energy (DOE). O 470.3C, DOE Design Basis Threat (DBT). Atlanta, Georgia.

Western Electricity Coordinating Council (WECC). FAC-501-WECC – 1: Transmission Maintenance. Salt Lake City, UT.

Western Electricity Coordinating Council (WECC). VAR-502-WECC-CRT-0.1: WECC PSS Design and Performance Criteria. Salt Lake City, UT

APPENDIX

A. Additional Background Information Resources

American National Standards Institute/Institute of Electrical and Electronics Engineers (ANSI/IEEE). C37.2 Electrical Power System Device Function Numbers, Acronyms, and Contact Designations. New York, New York.

American National Standards Institute/Institute of Electrical and Electronics Engineers (ANSI/IEEE). Std. 81 Part 1 - Guide for Measuring Earth Resistivity, Ground Impedance, and Earth Surface Potentials of a Ground System & Part 2: Guide for Measurement of Impedance and Safety Characteristics of Large, Extended or Interconnected Grounding Systems. New York, New York.

Bonneville Power Administration (BPA), U.S. Dept. of Energy. STD-D-000028, “Seismic Policy.” Portland, Oregon.

Bonneville Power Administration (BPA), U.S. Dept. of Energy. “AGC Requirements Document.” Portland, Oregon.

Bonneville Power Administration (BPA), U.S. Dept. of Energy. Balancing Authority Area Services Agreement (BAASA). Portland, Oregon.

Bonneville Power Administration (BPA), U.S. Dept. of Energy. STD-D-000032, “Physical Security Policy.” Portland, Oregon.

Bonneville Power Administration (BPA), U.S. Dept. of Energy. STD-DS-000014, “Outdoor Substation Electrical Clearance and Insulation Policy”. Portland, Oregon.

Bonneville Power Administration (BPA), U.S. Dept. of Energy. STD-DS-000027, “Substation Dead-end Tower Loading Criteria.” Portland, Oregon.

Bonneville Power Administration (BPA), U.S. Dept. of Energy. STD-DT-000006, “Overhead Cable Selection.” Portland, Oregon.

Bonneville Power Administration (BPA), U.S. Dept. of Energy. STD-DT-000052, “Transmission Line Disconnect Switch Installation Standard.” Portland, Oregon.

Bonneville Power Administration (BPA), U.S. Dept. of Energy. STD-DT-000094, “Transmission Line Disconnect Switch Grounding.” Portland, Oregon.

Institute of Electrical and Electronic Engineers (IEEE). Std 487, Recommended Practice for the Protection of Wire-Line Communication Facilities Serving Electric Power Stations. New York, New York.

Institute of Electrical and Electronic Engineers (IEEE). Std 80, Guide for Safety in AC Substation Grounding. New York, New York.

Institute of Electrical and Electronic Engineers (IEEE). Std. 367, Recommended Practice for Determining the Electric Power Station Ground Potential Rise and Induced Voltage from a Power Fault. New York, New York.

Institute of Electrical and Electronic Engineers (IEEE). Std. 837, Standard for Qualifying Permanent Connections Used in Substation Grounding. New York, New York.

Institute of Electrical and Electronic Engineers (IEEE). Std. P2800-2022, Standard for Interconnection and Interoperability of Inverter-Based Resources Interconnecting with Associated Transmission Electric Power Systems New York, New York.

International Code Council. International Building Code. Washington, D.C.

National Fire Protection Association (NFPA). 70, National Electrical Code. Quincy, Massachusetts.

North American Electric Reliability Corporation (NERC). MOD-029, Rated System Path Methodology, Atlanta, Georgia.

North American Electric Reliability Corporation (NERC). MOD-030, Flowgate Methodology, Atlanta, Georgia.

North American Electric Reliability Corporation (NERC). MOD-033, Steady State and Dynamic System Model Validation, Atlanta, Georgia.

North American Electric Reliability Corporation (NERC). MOD-028, Modeling & Data Standards. Atlanta, Georgia.

North American Electric Reliability Corporation (NERC). IRO-010, Reliability Coordinator Data Specification and Collection. Atlanta, Georgia.

North American Electric Reliability Corporation (NERC). IRO-017, Outage Coordination. Atlanta, Georgia.

North American Electric Reliability Corporation (NERC). PRC-012, Protection Systems: Remedial Action Schemes (RAS). Atlanta, Georgia.

North American Electric Reliability Corporation (NERC). PRC-024 Frequency and Voltage Protection Settings for Synchronous Generators and Synchronous Condensers. Atlanta, Georgia

North American Electric Reliability Corporation (NERC). PRC-029 Frequency and Voltage Protection Settings for Inverter-Based Generating Sources. Atlanta, Georgia

North American Electric Reliability Corporation (NERC). PRC-030 Unexpected Inverter-Based Resource Event Mitigation. Atlanta, Georgia

North American Electric Reliability Corporation (NERC). TPL-001Transmission System Planning Performance Requirements. Atlanta, Georgia.

North American Electric Reliability Corporation (NERC). TPL-007, Transmission System Planned Performance for Geomagnetic Disturbance Events. Atlanta, Georgia.

North American Electric Reliability Corporation (NERC). VAR-001, Voltage and Reactive Control. Atlanta, Georgia.

North American Electric Reliability Corporation (NERC). VAR-002, Generator Operation for Maintaining Network Voltage Schedules. Atlanta, Georgia

Occupational Safety and Health Administration, U.S. Department of Labor. Washington, D.C.