Two Examples of Probabilistic Transmission Planning At BPA

Bill Mittelstadt, Chuck Matthews and Paul Ferron

Grid Transformation March 20, 2013

Topics

- BPA Transmission Outage Data using the Transmission Outage Manager Program
- Benefits Analysis Program (1996)
- Kangley – Echo Lake 500 kV reclassification example

Transmission Outage Management Program (TOM)

- Maintains an outage data base for BPA system transmission lines
- Allows statistics to be grouped in many different ways to estimate the effect of a change in design or expected outage rate of a future transmission facility.

Program written by Sudhir Agrawal (General Reliability)

Ways To Sort Data

- Voltage Class (500 kV, 345 kV, 230 kV,…)
- Region of system
- With or without OHGW
- Outage time (temporary or sustained)
- Fault cause (line or terminal)
- Common or separate tower

For example: What is expected outage rate for a 10-mile 500 kV double-circuit line located east of the Cascades on common tower with OHGW and high-speed reclosing?

Benefits Analysis Program

- Planning effort applied to 14 area service transmission projects (1996).
- Cost/Benefit Analysis: project, societal, BPA
- Outage statistics: frequency and duration
- Load duration curve of area or region used, incremented by time (next slide)

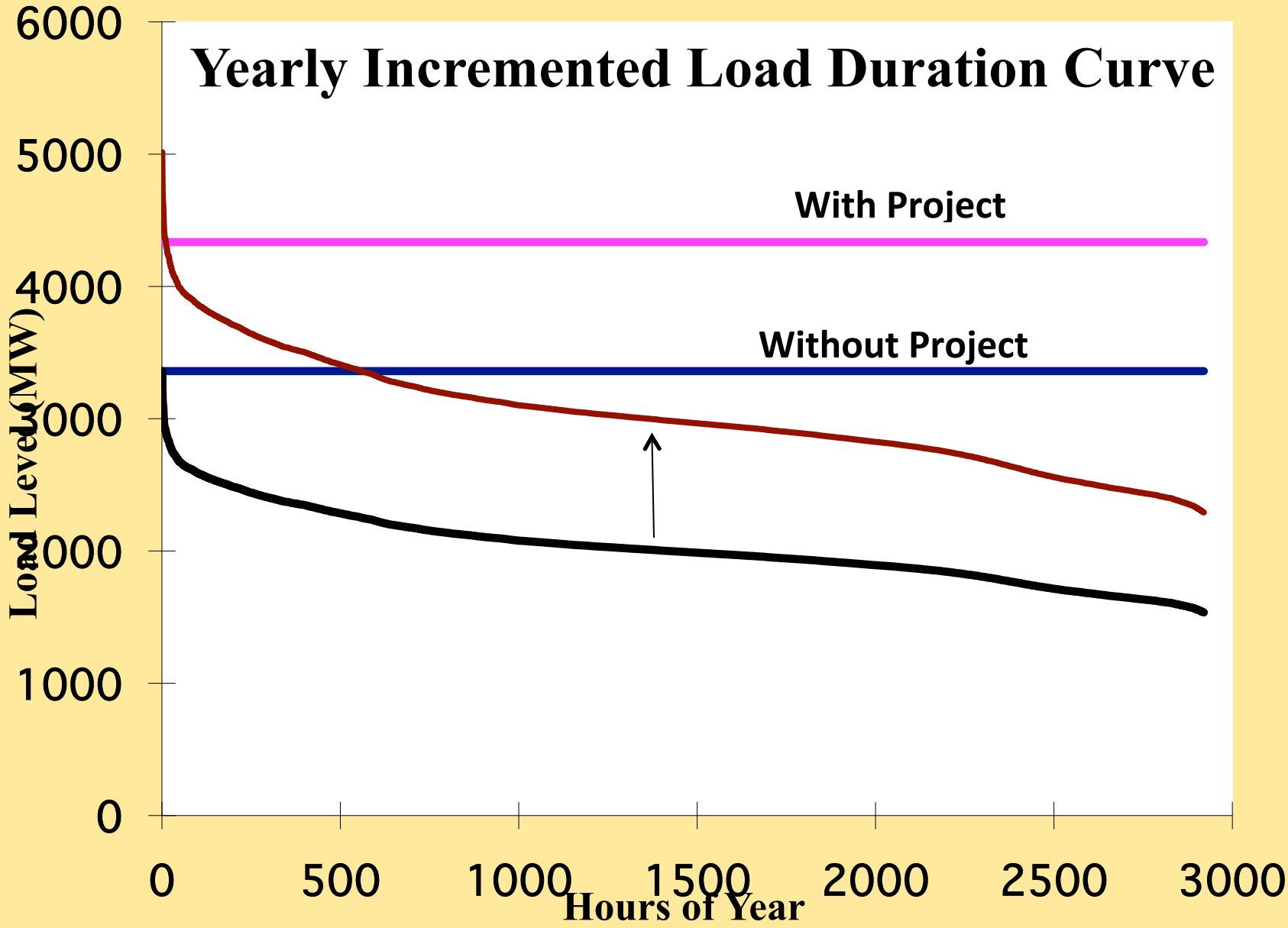
Yearly Incremented Load Duration Curve
With Project
Without Project
Load Level (MW)
6000
5000
4000
3000
2000
1000
0
0
500
1000
1500
2000
2500
3000
Hours of Year

Kangley – Echo Lake 500 kV Case

- 9.5 mile common ROW of two lines with one common breaker and half terminal
- 2715 mile-years of historical data spanning a period of 17 years for estimating MTBF
- Adjusted historical data for load duration analysis
- Robust Line mitigation factors
- Adjusted from Category C to D by WECC

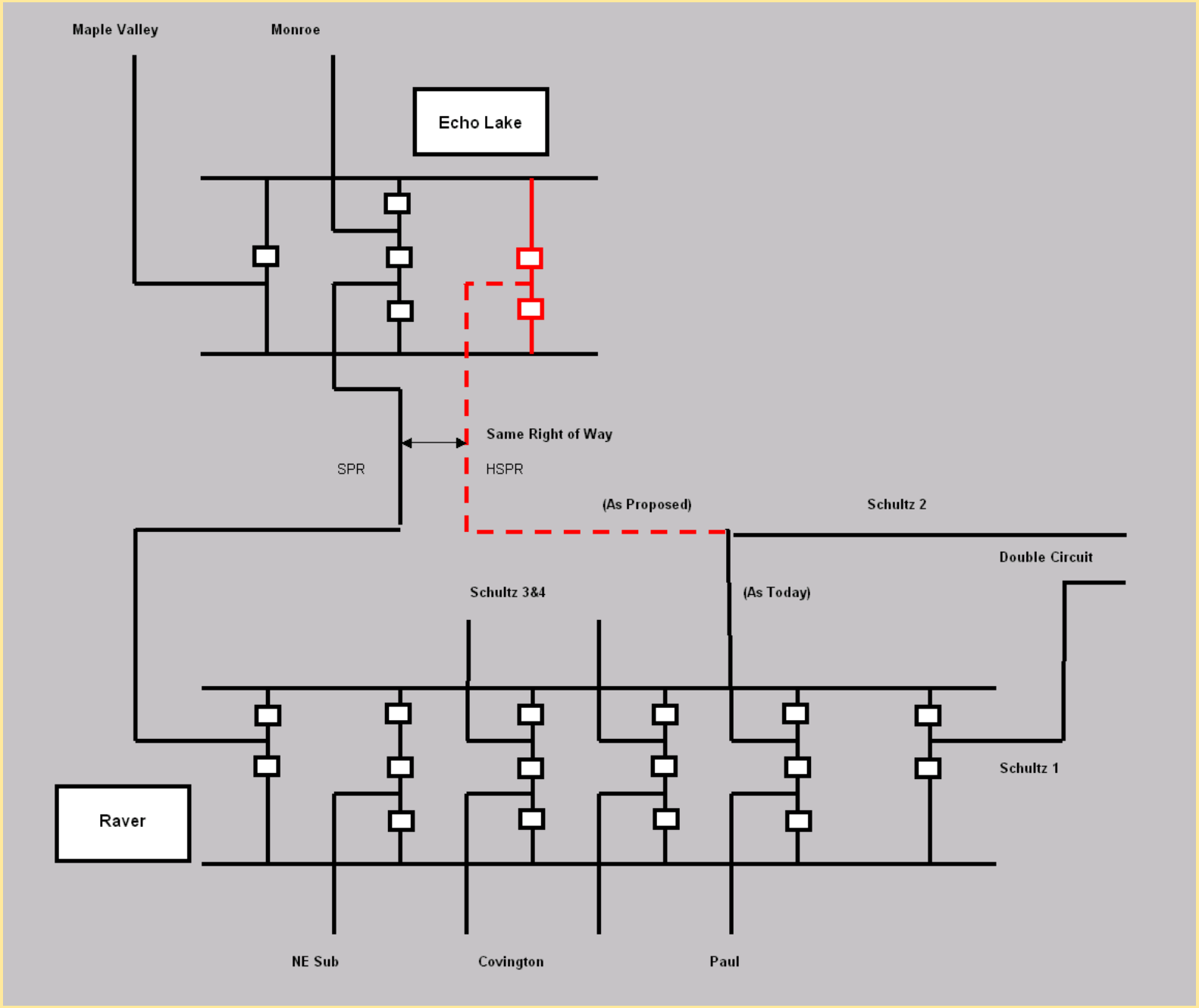
Maple Valley
Monroe
Echo Lake
Same Right of Way
SPR
HSPR
(As Proposed)
Schultz 2
Double Circuit
Schultz 3&4
(As Today)
Schultz 1
Raver
NE Sub
Covington
Paul

Exposure Analysis
Three-Year Record

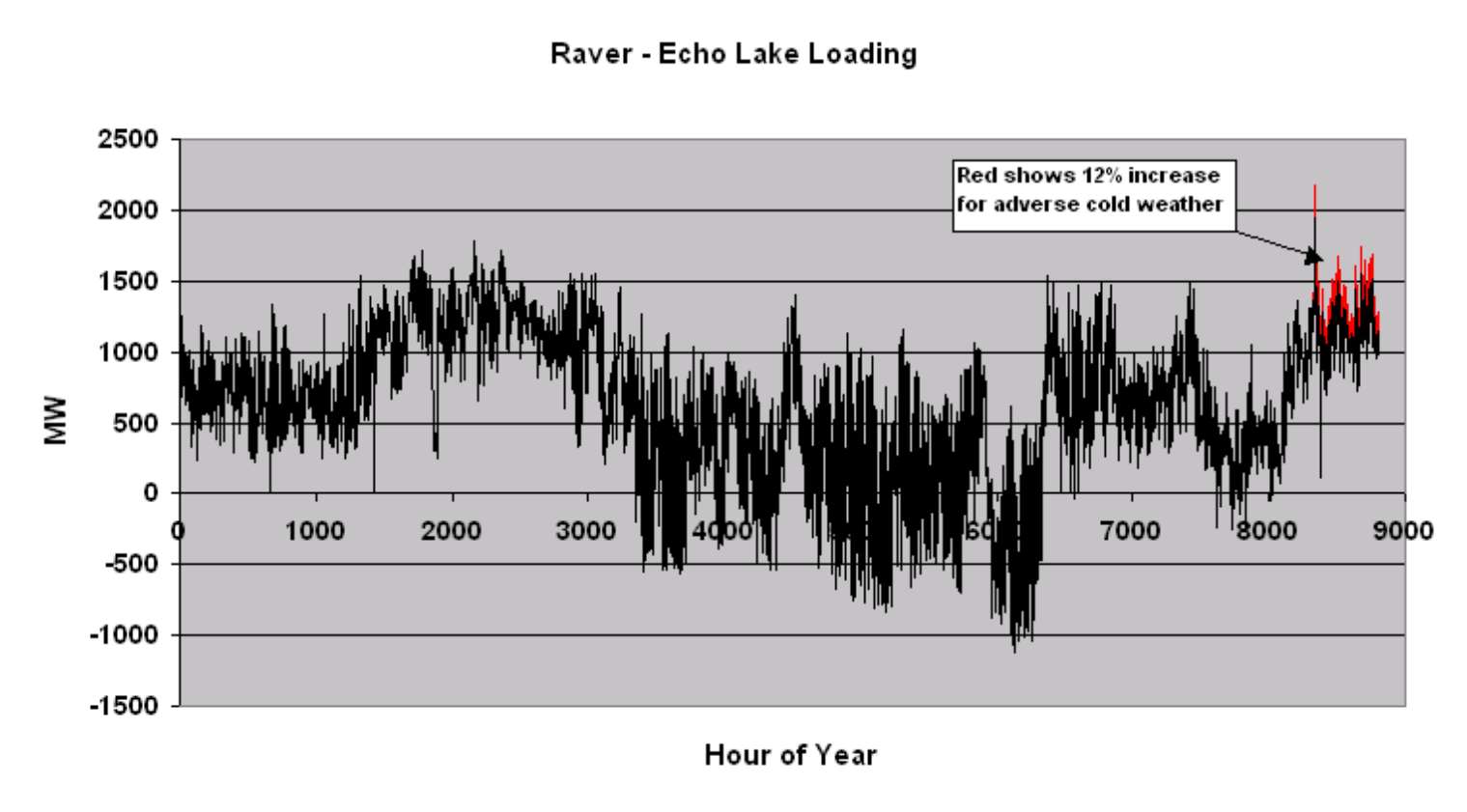

Exposure Analysis Load-Duration Curve

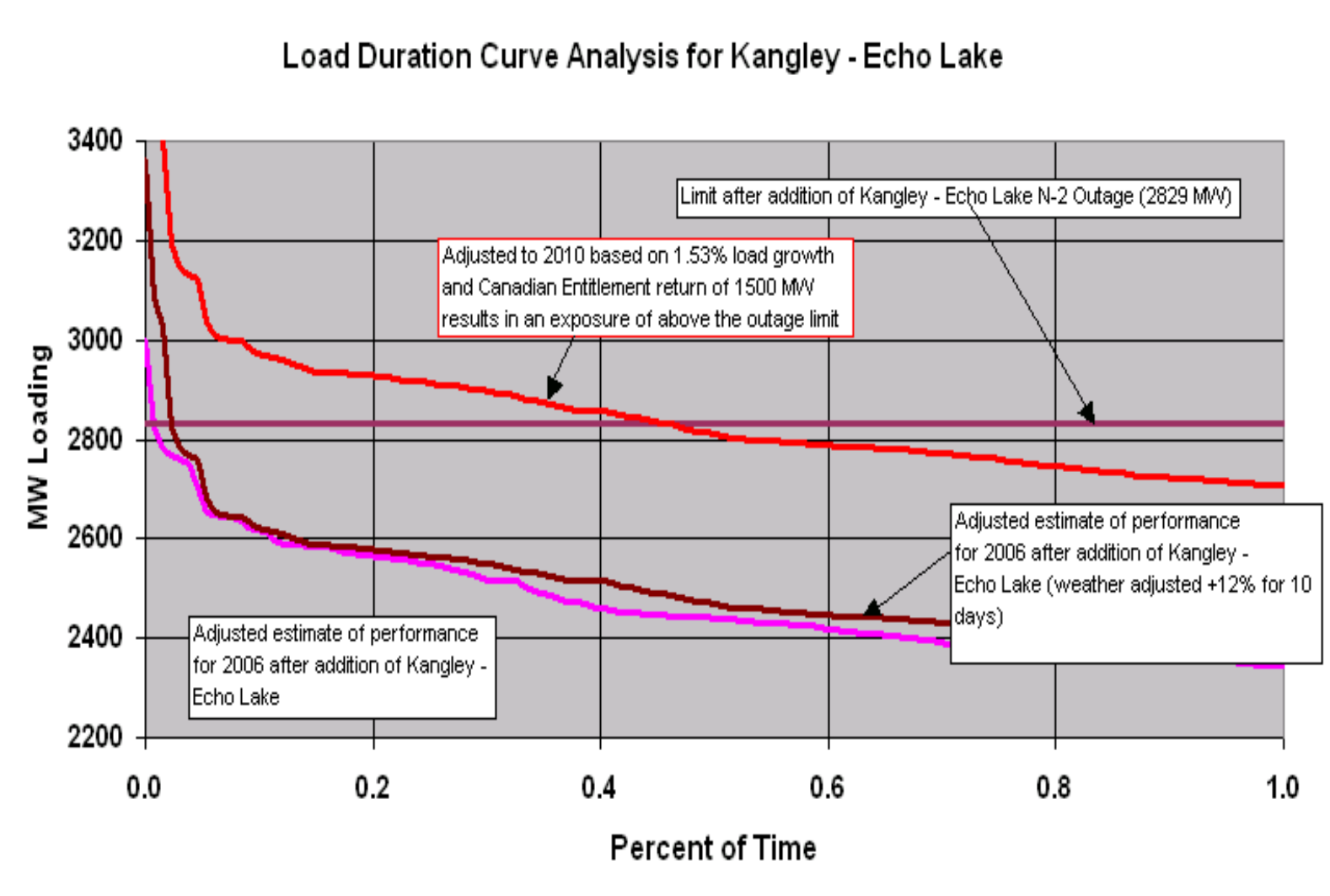

- **Increasing to 41 hours/year by 2010**

? Concluding Questions ?

- How can we better use line and station historical outage information in making decisions on future projects?
- How can we be better use historical and projected flow patterns in making decisions on future projects?
- What tools are available?

Concluding Suggestions…

- Increase use of statistical outage information and forecasted projections on path use in comparing alternatives and selecting network robustness features.
- Examine practical ways to minimize the impact of extreme events.
- Continue to improve situational awareness.
- Minimize system readjustment time to reduce risk posed by a next contingency.

Questions?

Reducing Risks

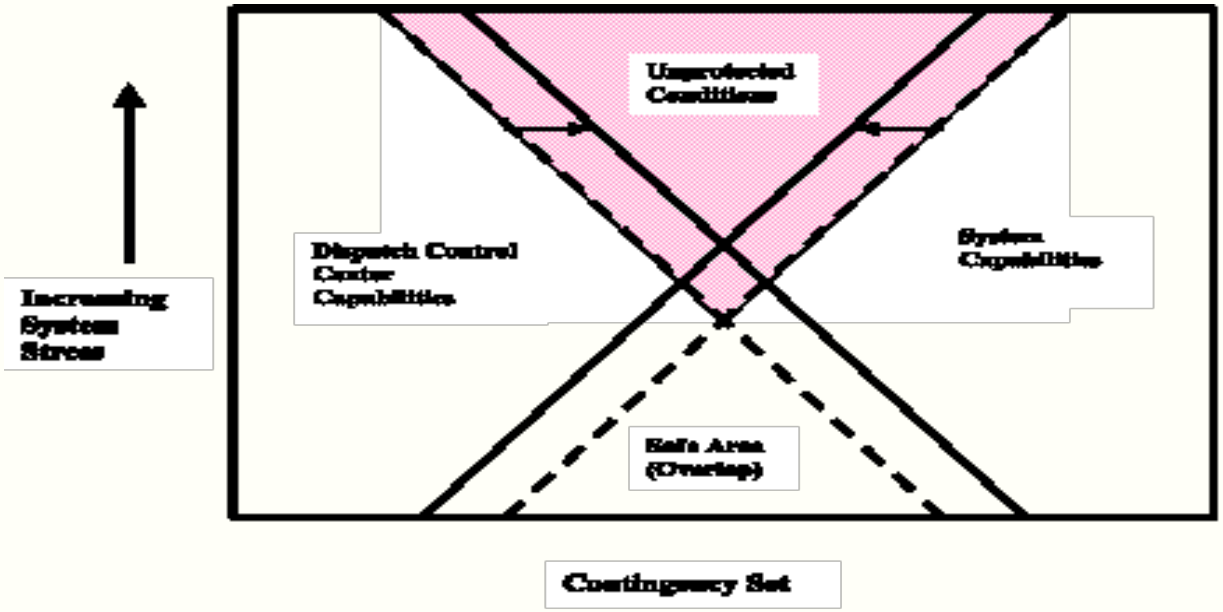

References

1. Outage Probability of Lines Sharing a Common Corridor, W.A. Mittelstadt, D. Paul Ferron, S. K. Agarwal, Ron E. Baugh 8th International Conference Probabilistic Methods Applied to Power Systems, September 12-16, 2004.
2. Robust Line Design Features, WECC Reliability Probability Evaluation Work Group approved, December 2003.

Statistical Base Used

A. Monroe – Custer 500, 1&2 89 miles
B. Paul – Allston 500, 1&2 48 miles
C. Custer – Ingledow 500, 1&2 23 miles

D. 2700 Mile-years of historical data
E. West of Cascades sample
F. None shield wire equipped
G. Paul-Allston SPR Equipped