Wind Plant Modeling Status and Needs for Validation

BPA Voltage Control Technical Workshop

Portland OR

August 23, 2011

Robert Zavadil
Executive Vice President
620 Mabry Hood Road, Suite 300
Knoxville, Tennessee 37932
Tel: (865) 218-4600 ex. 6149
bobz@enernex.com
www.enernex.com

Role of Models in Bulk Power System Planning

- Adequate simulation models are indispensable for maintaining grid reliability
  - Identify and address impact of new generator, transmission equipment additions
  - Perform planning studies to ensure system reliability at the local and regional level
- Modeling focus for grid studies
  - Steady-state: power flow for voltage and reactive compensation assessment, contingency evaluation
  - Dynamic: behavior of system and individual elements during and immediately after major system disruptions (e.g., short-circuits, loss of major generators, etc.)
- Model requirements addressed in existing (and future) NERC standards

Energy Conversion Technology for Wind Generation

- Wind turbine technology
  - Conventional induction machines
  - Induction machines w/ static power converter control
  - more exotic technology (e.g., direct drive, PM synchronous generators)
  - Unconventional prime mover and mechanical system, control
- Wind plant technology
  - Substantial influence on behavior as seen by the grid
    - » Turbine terminal characteristics – PF compensation, control
    - » Distributed reactive power compensation
    - » Reactive losses (I*I*X) within plant
  - Turbine technology is but one aspect of model for grid studies

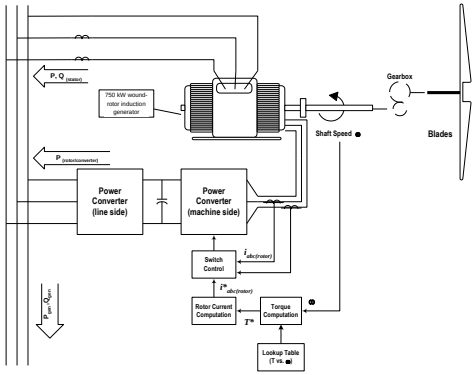

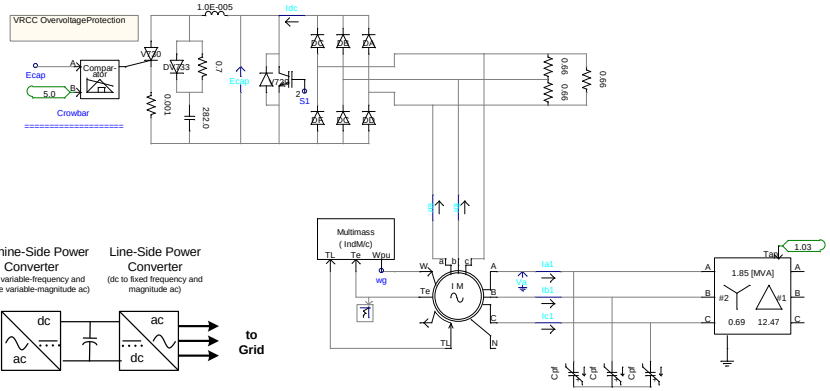

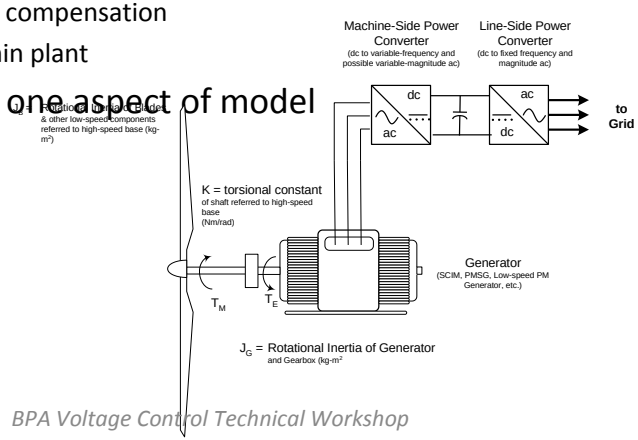

Wind Plant Components

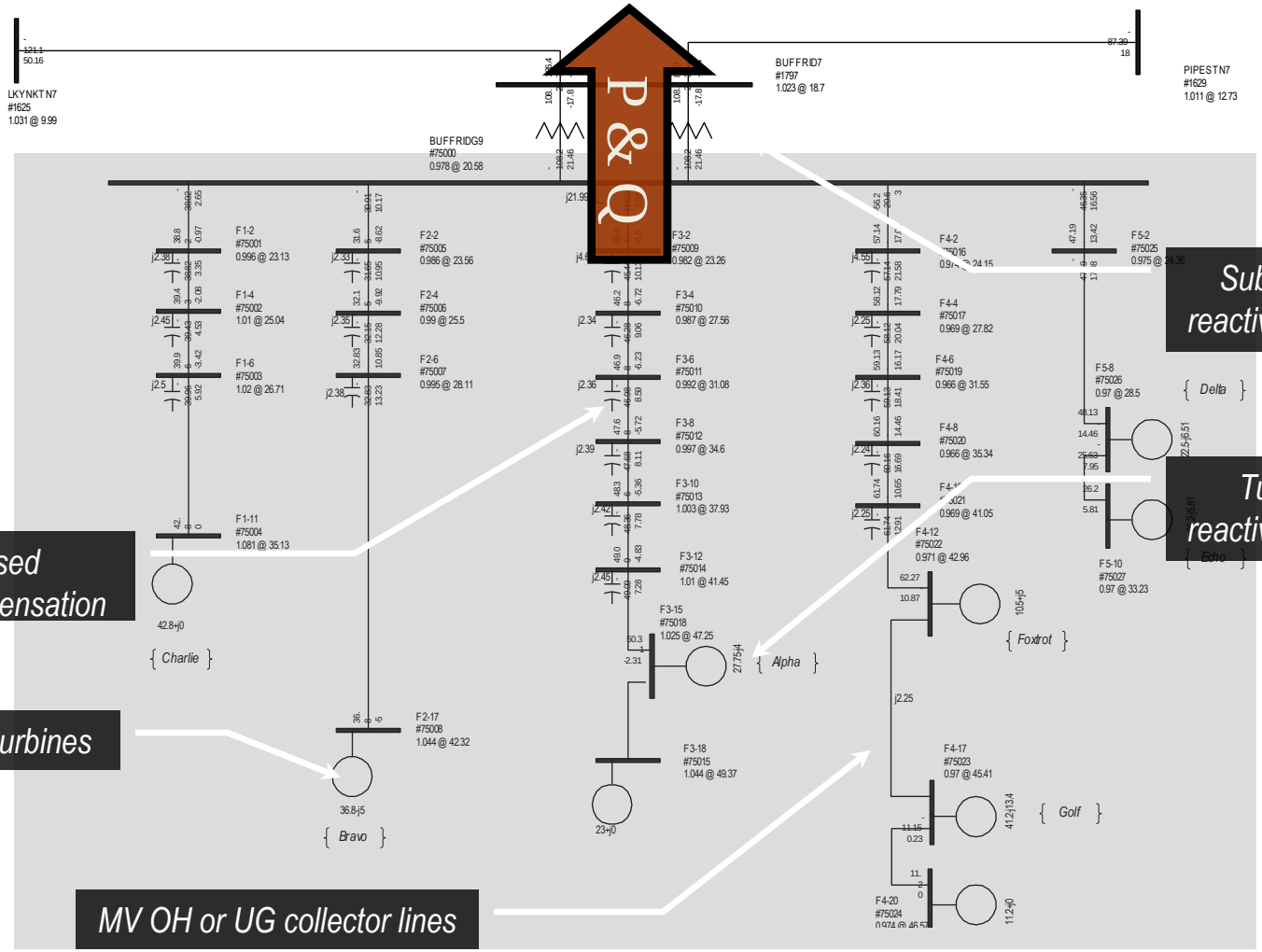

Status

- Wind turbine and plant modeling remains at top of power industry needs list
- Landscape is much different than it was 5 years ago
  - Many parallel activities
  - Increased and widespread interest
  - The clock is now ticking (NERC)…
- Much progress made since over past five years
  - Individual efforts (turbine vendors, TSPs)
  - WECC initiative w/ voluntary contributions
- Progress needs to be accelerated as firm deadlines are now probable

NERC IVGTF Phase II Task 1.1 - Scope

- From recommendations of Phase I report
- Focus on modeling for interconnection and other bulk system studies
- Phase II recommendations complete

Item #	Proposed Improvement	Abstract	Lead	Deliverables	Milestones
1.1	Standard, valid, generic, non-confidential, and public power flow and stability models (variable generation) are needed and must be developed, enabling planners to maintain bulk power system reliability	Valid, generic, non-confidential, and public standard power flow and stability (positive-sequence) models for variable generation technologies are needed. Such models should be readily validated and publicly available to power utilities and all other industry stakeholders. Model parameters should be provided by variable generation manufacturers and a common model validation standard across all technologies should be adopted. The NERC Planning Committee should undertake a review of the appropriate Modeling, Data and Analysis (MOD) Standards to ensure high levels of variable generation can be simulated. Feedback to the group working on NERC Standards' Project 2007-09 will be provided.	*Ad Hoc* group: Members from IVGTF - Planning	Make recommendations and identify changes needed to NERC's MOD Standards	• Draft report ready by December 2009 PC meeting • Final report sent with recommendations to PC for endorsement in February 2010 • Develop SAR with Standards Committee if required.

NRC IVGTF Task 1-1: Standard Models for Variable Generation

- Standard, valid, generic, non-confidential, and public power flow and stability models (variable generation) are needed and must be developed, enabling planners to maintain bulk power system reliability.
- Make recommendations and identify changes needed to NERC's MOD Standards
- Status:
  - Report issued in May 2010; approved by NERC in June 2010
  - Recommendations discussed and communicated to NERC SDTs

Highlights of Recommendations

- MOD-011: Regional Steady-State Data Requirements and Reporting Procedures
  - Need to specify more clearly applicability to VG
- MOD-012: Dynamics Data for Transmission System Modeling and Simulation
  - MOD already general enough to cover VG
- MOD-013-1: RRO Dynamics Data Requirements and Reporting Procedures
  - Beneficial to include an explicit statement to cover variable generation
- • MOD-024-2 — Verification and Data Reporting of Generator Real Power Capability
  - As of 2010 this MOD indicated VG was exempt
  - For a VG plant the definition of Real Power Capability can be slightly challenging
- MOD-025-1 — Verification of Generator Gross and Net Reactive Power Capability (see Real Power Capability)

Highlights of Recommendations – Model Validation

- MOD 26 - Verification of Models and Data for Generator Excitation System Functions (and MOD 27)
  - Unit/Plant Size for Validation
  - Validation of various technologies in a single plant
    - » Uniform VG plant (i.e. all units same technology) a single aggregate generator model
    - » Diverse VG plant, the plant should be represented by multiple aggregated unit models
  - Validation of different control layers
  - Modeling and Model Validation:
    - » Models should state clearly the type and the range of events they have been designed to simulated, and the limitation of the model should be defined.
    - » Best approach to model validation is to use field (or test bench) measurement of various disturbances that exercise the different control functions
    - » A model is valid if its dynamic behavior is close enough to reality – perfect curve fitting is not necessary
  - Future functionality
  - Modeling of protection
  - Issues related to the fuel source for variable generation
  - Revalidation

UWIG Generic Modeling Initiative

- Build on efforts initiated by WECC in 2005 to develop generic models for wind turbines and wind plants
- Utility Wind Integration Group / EnerNex project team
- DOE FOA 68
  - "20% Wind by 2030"
  - Topic 4A: Utility Wind Energy Integration
- Commitment of support from turbine vendors, National Laboratories, NERC, IEEE, RREs
- Work began 1Q '10
- **Overall goal is to accelerate model development process for wind generation**

Context

- Emphasis is on very specific models for bulk electric system impact studies, not “models” generally
- Behavior of turbines/plant under defined range conditions
  - Large-signal, short-duration variations of voltage and/or frequency
  - BES origin, not wind-driven
- Wind plants vs. conventional generators
  - Conventional generators -> synch. Machine + exciter + governor
  - Wind plants comprised of many (exotic) machines, and lots of other stuff
  - “Plant” vs. “Generator” validation

Approaches for Model Validation

- Various methods can and have been used
- All have advantages and disadvantages

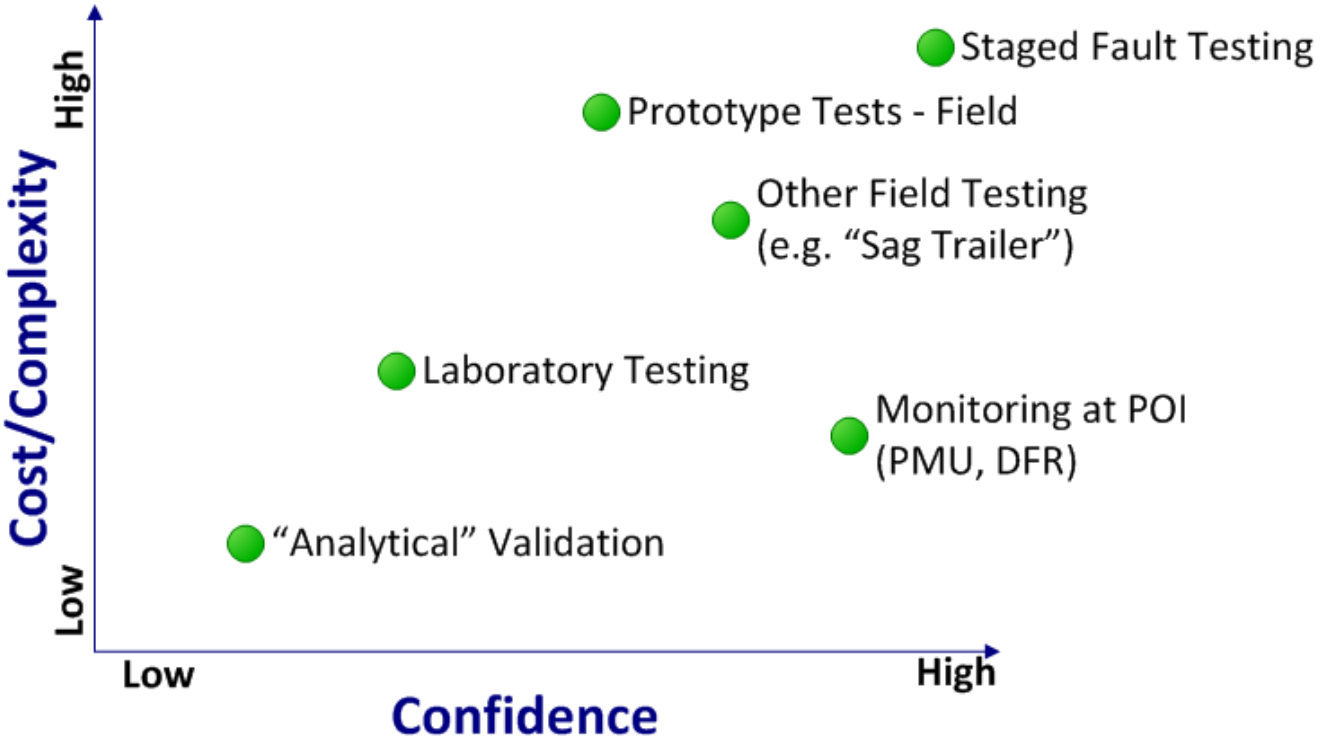

PMU Data appears ideal for validation…

- First-principle quantities (i.e. voltage, grid injection current phasors) at resolution cycle-by-cycle resolution
  - Response of wind plant to large-signal disturbances on grid
    - » Voltage (short-circuits)
    - » Frequency excursions
  - PMU resolution is consistent with bandwidth of dynamic simulations in major bulk system analysis tools (PSS/E, PSLF)
- Monitoring at wind plant interconnection to BES would provide sufficient data for characterizing performance
  - Voltages *and* currents
  - Other important quantities can be derived

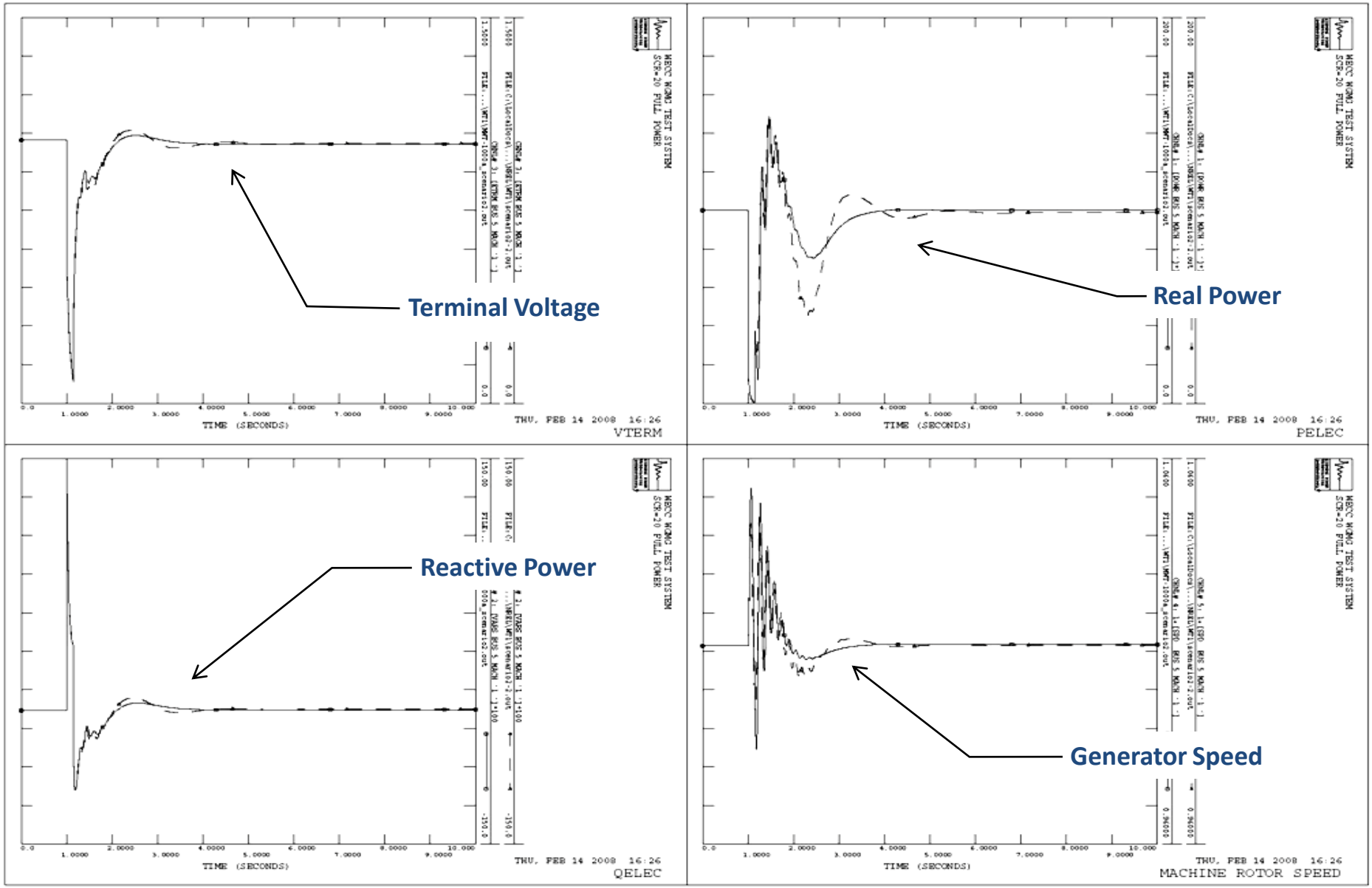

Dashed: Vendor-specific detailed model. Solid: WT1 model

…but

- A specific event may be hard to replicate via simulation
  - Plant model complexities
  - Initial conditions/system state
  - Origin and nature of system disturbance
- Actual events will be asymmetrical
  - PSS/E, PSLF models are positive sequence only
  - Unbalanced events model very approximately
  - 3-phase faults are extremely rare
- Events are infrequent
  - With just a few monitored locations, appropriate data for validate may be long in coming
  - Can be partially remedied by monitoring at many locations
- Large number of commercial turbines to validate

Approach for DOE/UWIG Project

- Project timeline is relatively short
- Acquire data/information from multiple sources
  - Validations that have already been performed
  - Vendor test data (field, prototype, laboratory)
  - PMU data from cooperating entities (e.g. BPA, MISO), if any becomes available
  - Analytical validation
- Project deliverable is structured to support ongoing efforts
  - Wind turbine “wikipedia”
  - Ongoing support from UWIG; allows broader community to continue contributions

Summary

- PMUs will likely become a prime source of data for validation of all power system models
- Schedule for UWIG project is short, so expectations for validation via PMU data are low
- However, continued UWIG support of turbine model documentation will provide a repository for validation reports going forward
- And, what will NERC require for validation?