RESIDENTIAL WEATHERIZATION BEST PRACTICES FIELD GUIDE

Contents

1 INTRODUCTION TO THE FIELD GUIDE AND BEST PRACTICES 4
1.1 How to Use this Field Guide 4
1.2 Commitment to Health, Safety, and Durability 5
1.3 General Requirements 5
1.4 Material and Installation Requirements 6
2 WEATHERIZATION HEALTH AND SAFETY BEST PRACTICES 9
2.1 Covering Fibrous Insulation in Intermediate Zones 9
2.2 Safety Requirements for Electrical Wiring 9
2.3 Carbon Monoxide Alarms 10
3 INSTALLER RECORD 12
4 ATTIC AND ROOF-CAVITY INSULATION 13
4.1 Preparation for Attic and Roof-Cavity Insulation 13
4.2 Passive Attic Ventilation 17
4.3 Exhaust Fans 19
4.4 Prescriptive Attic Air Sealing (Optional) 20
4.5 Attic Insulation: Installation 23
4.6 Unvented Attics 29
4.7 Sloped Roof Cavities in Finished Attics 30
4.8 Exterior Roof Insulation 31
5 MANUFACTURED HOMES: CEILING AND ROOF INSULATION 32
5.1 General Requirements for Insulating Ceilings and Roofs 32
5.2 Exterior Roof Insulation 32
5.3 Insulating Manufactured-Home Roof Cavities 33
6 UNDERFLOOR INSULATION 36
6.1 Preparation for Underfloor Insulation 36
6.2 Prescriptive Crawlspace Air Sealing (Optional) 39
6.3 Installing Underfloor Insulation 40
7 MANUFACTURED HOMES: UNDERFLOOR INSULATION 44
7.1 Duct Insulation, Duct Sealing and Air Sealing 44
7.2 Preparation for Underfloor Insulation 44
7.3 Blown Underfloor Insulation 46
7.4 Fiberglass Batt Underfloor Insulation 47
8 WALL INSULATION: SITE BUILT HOMES 48
8.1 Insulating Unfinished Walls 48

8.2 Installing Blown Insulation 48
8.3 Exterior Continuous Wall Insulation 50
9 HVAC DUCT SEALING AND INSULATION 51
9.1 Duct Sealing 51
9.2 Duct Insulation 51
10 MANUFACTURED HOMES: DUCT SEALING AND INSULATION 53
10.1 Duct Sealing 53
10.2 Duct Insulation 53
11 HYDRONIC AND WATER-PIPE INSULATION 54
11.1 Materials Requirements 54
11.2 Installation Requirements 54
11.3 Heating Cable Requirements 55
12 PRIME WINDOW, SLIDING GLASS DOOR, AND FRENCH DOOR REPLACEMENTS 56
12.1 General Window Requirements 56
12.2 Window Installation Requirements 57
12.3 Safety Glass and Emergency Egress 60
13 PRESCRIPTIVE AIR SEALING 62
14 WHOLE-HOUSE AIR SEALING 63
14.1 Introduction to Whole-House Air Sealing 64
14.2 Whole-House Air Sealing Practices 66
14.3 Air Leakage Testing Protocol 69
15 EVALUATING HOME VENTILATION LEVELS 72
15.2 Whole-Building Ventilation Requirement 72
15.3 Local Exhaust Ventilation Requirement 72
15.4 Natural Ventilation Credit 73
16 MECHANICAL WHOLE-HOUSE VENTILATION 76
16.1 Local Ventilation 76
16.2 Mechanical Ventilation Strategies 77
16.3 Combustion Safety-Testing 79
APPENDIX 1: WHOLE-HOUSE VENTILATION REQUIREMENTS 83
APPENDIX 2: EXHAUST FAN PRESCRIPTIVE DUCT SIZING 84
APPENDIX 3: N-VALUES FOR CFMN-TO-CFM_{50} CONVERSION 85
APPENDIX 4: GLOSSARY 86
APPENDIX 5: ACRONYMS 94
APPENDIX 6: STATE BUILDING CODE DIVISIONS 96

1 Introduction to the Field Guide and Best Practices

Weatherization is an effort to improve a home's thermal performance by adding insulation and reducing air leakage. Many older homes, and some newer homes, lack adequate insulation, which wastes energy, causes discomfort, and leads to high energy bills. Sometimes these flaws in the building also impact indoor air quality (IAQ) or the durability of the home. Weatherization can improve these flaws and reduce bills, save energy and keep occupants comfortable, while at the same time preventing damage from moisture and health concerns to the occupants.

This illustrated field guide contains step-by-step weatherization procedures for single-family buildings and mobile homes. Single-family buildings include one-to-four dwelling units within the structure. Modular homes and accessory dwelling units are considered single family. This guide doesn't cover multifamily weatherization (5 units or more). The guide explains why weatherization is important, how to perform weatherization measures, and helps contractors communicate this to homeowners. While explaining each weatherization activity, the field guide also discusses relevant building science, which explains how the house works as a system. This knowledge helps contractors to avoid unintended consequences of weatherization work and to communicate weatherization's benefits to homeowners.

This field guide describes the requirements and the best practices for accomplishing the following weatherization measures.

- Ceiling, wall, and floor insulation.
- Air sealing.
- Window replacement.
- Duct insulation.
- Prescriptive duct sealing.

This field guide presents a prescriptive approach to weatherization, striving to meet current industry best practices and to explain building science concepts. Weatherization work can cause or worsen indoor air quality problems unless contractors understand building science. This field guide covers IAQ because weatherization work includes identifying or mitigating IAQ problems. Contractors looking for more information should seek out training courses that teach a diagnostic approach to weatherization.

1.1 How to Use this Field Guide

This contractors' field guide is meant to be a comprehensive overview of basic weatherization for a home. It provides step-by-step instructions for common practices, discusses best practices, and explains the basics of building science. Utility weatherization program requirements are included and highlighted in blue text. By reading this document, you will learn how to insulate, perform air sealing, and replace windows on a home. Your efforts will make the home more comfortable for occupants, reduce energy waste, save money, and may even improve the healthfulness and durability of the home.

With a section, numbered lists are used to describe a step-by-step procedure. Lists beginning with letters show different options a contractor may choose. Lists of bullets show different, non-sequential specifications or best practices.

Air sealing in particular can be a difficult concept for homeowners to grasp. This guide provides in-depth discussion of how and why air sealing may benefit a home, the best ways to identify leaks, and how to deal with the ventilation needs of a home. It also explains some health and safety tests that can identify problems with combustion appliances.

While this guide is meant to be comprehensive, there's no way it can cover every single situation that exists in a home. The building science included is meant to provide a framework for understanding how different building components work together and affect each other. With this background, contractors can solve the unique problems that show up in homes.

This guide is a work in progress. Submit comments or suggestions to jbkincaid@bpa.gov.

1.2 Commitment to Health, Safety, and Durability

Contractors should never compromise the health and safety of occupants when installing energy conservation measures. Poorly installed energy conservation measures can change the performance of heating and cooling systems, trap moisture in building cavities, or reduce a home's natural ventilation rate. When properly installed, weatherization services improve health, safety, indoor air quality, and home durability in addition to saving energy.

Weatherization contractors should have a basic understanding of building science in order to perform weatherization measures effectively without causing unintended consequences like moisture problems and indoor air pollution. Each section of this field guide contains short explanations of the building science related to that section.

1.3 General Requirements

These requirements and best practices apply to existing residential (retrofit) weatherization for electrically heated single family and manufactured homes. Single family homes include buildings with 1-4 units in a structure up to three stories and townhouse homes that share walls but do not vertically overlap (side by side and not stacked vertically).

Weatherization measures must be installed to reduce heat loss from conditioned space to unconditioned space or outdoors.

Contractors must also comply with all applicable state and local codes, HUD code, and federal regulations as appropriate. When a federal, state or local code or regulation ***exceeds*** the requirements provided here, that code or regulation applies. If the federal, state or local codes or regulations ***don't exceed*** these requirements, then these requirements apply.

In manufactured homes, all combustion appliances, except gas cooking appliances and gas clothes dryers, must be sealed-combustion or have supply-air ducted from outdoors directly to the appliance. Fireplaces

and wood burning stoves must have tight-fitting glass or metal doors that cover the entire opening of the firebox.

All homes that have any weatherization measures installed should receive these documents.

1. Care for Your Air: A Guide to Indoor Air Quality, EPA.
   •http://www.epa.gov/iaq/pdfs/careforyourair.pdf
2. Indoor Air Quality Homeowner Disclosure Form.
   •http://rtf.nwcouncil.org/subcommittees/res/IAQDisclosureFinal.pdf

1.4 Material and Installation Requirements

Weatherization contractors must install all measures in a safe, durable, and effective manner. A variety of materials exist for weatherizing homes, each with unique strengths and weaknesses to be considered in each application. Contractors should select and install the appropriate weatherization materials for each situation, considering factors such as insulating performance, moisture absorption, vapor permeability, and fire resistance. The following are minimum requirements for selecting and installing weatherization materials.

- Contractors must install all materials according to the manufacturer's instructions.
- All materials must resist environmental degradation according to how they're used and their exposure to environmental factors.
  a. Materials used in weatherization must resist corrosion if exposed to corrosive materials.
  b. Materials used in weatherization must resist mold and rot if exposed to ground moisture or a foundation.
  c. Materials used in weatherization must resist degradation from ultraviolet light if exposed to ultraviolet light.
  d. Materials used in weatherization must be compatible with other elements and materials for the sake of durability (for example: won't react chemically).
- Structural members and building components must be free of decay and must be structurally sound before weatherization measures are installed in their vicinity.
- Contractors must warrant all weatherization materials, products, and labor against failure due to manufacturing and installation defects for a period of at least 2 years from the installation date. *Exception*: sealed, insulated-glass units must be warranted against failure of the seal for a minimum of 5 years. The contractor must provide a written warranty, including the installation date, to the Homeowner or Homeowner Designee. Contractors may supply manufacturers' printed warranties to satisfy a part of this requirement.
- The American Society of Heating, Refrigeration, and Air Conditioning Engineers (ASHRAE) Handbook of Fundamentals is the accepted standard for R-value/U-factor of materials used by contractors. Products that vary from ASHRAE are acceptable if they comply with current Federal Trade Commission (FTC) certifications, testing and labeling rules, and have independent laboratory testing that indicates the product's R–value/U-factor.
- Use The National Fenestration Rating Council (NFRC) Certified Products Database (CPD) to

determine the U-factors for windows and doors.

- Insulation materials must meet the requirements of the Federal Trade Commission Labeling Rule (16 CFR 460).
- The UL label or equivalent label must appear on every bag of loose fill cellulose material. It must include the file number (R-number) of the manufacturer and the issue number for labels purchased. This ensures adherence to the requirements of CPSC cellulose regulation 16 CFR 1209, which includes critical radiant flux, smoldering combustion, settled density, and corrosiveness.
- Thermal insulation must meet the requirements listed below. Certain requirements refer to voluntary standards such as ASTM International for specific test methods or physical properties. For purposes of compliance with these weatherization requirements, the referenced voluntary standards are mandatory.

Table 1 - Standards for Insulation Materials

Insulation Material	Standard
Mineral Fiber Blankets/Batts	ASTM C 665
Mineral Fiber Loose Fill	ASTM C 764
Cellulose Loose Fill	ASTM C-739, CFR 1209, CFR 1404
Perlite	ASTM C-549 (ASTM C-728)
Vermiculite	ASTM C-516-96e1
Polystyrene Board	ASTM C-578
Polyisocyanurate Board	ASTM C 591 (ASTM C-1289, TYPE 1 OR TYPE 2)
Spray Polyurethane Foam	C 1029-96
Cellular Glass Board	(ASTM C 552)

1. Contractors must comply with fire-barrier requirements in local building codes, according to whether insulation is installed in an occupied area of the home or an intermediate zone, such as an attic or crawlspace.
   a. In occupied rooms, contractors must cover combustible insulation, such as foam insulation, with a thermal barrier such as half-inch drywall.
   b. In intermediate zones, contractors may install insulation without a covering, unless the local code or the local building inspector requires the contractors to cover the insulation with a thermal barrier or an ignition barrier.

Spray foam safety: Spray polyurethane foam insulation creates a toxin hazard to both installers and occupants while being installed. Contractors must wear the appropriate personal protective equipment when installing spray foam. Protect occupants through temporary barriers, ventilation, evacuation, or other appropriate means when spraying.

2. Caulk must conform to the standard listed below or be a material demonstrating equivalent performance.

Table 2 - Specifications for Caulking and Sealants

Caulking or Sealant	Specification
Silicone Rubber	TT-S-1543A
Polysulfide or Polyurethane (single component)	TT-S-230C
Acrylic Terpolymer (single component)	TT-S-230C
Polysulfide or Polyurethane (multiple component)	TT-S-227E
Butyl Rubber	TT-S-1657
Acrylic Latex	ASTM C834
Silyl Terminated Polyether (STPE)	ASTM C920

2 Weatherization Health and Safety Best Practices

Any weatherization measure must be installed in a manner that is safe for both the contractor and the occupants. Health and safety issues arise when working around electrical wires, when weatherization can interfere with the draft of combustion appliances, and when installing materials where homeowners might come in contact, among other situations. Comply with the following health and safety requirements for all weatherization jobs.

2.1 Covering Fibrous Insulation in Intermediate Zones

Fibrous insulation is an irritant to skin, eyes and lungs. Whenever fibrous insulation is installed where occupants might access for storage or maintenance, contractors must cover the fibrous insulation with a vapor-permeable air barrier (for example: house wrap, drywall). This barrier limits occupant irritation due from exposure to insulation fibers. The barrier also reduces air convection through the insulation, which can degrade its performance. Fibrous insulation includes fiberglass, cellulose, and rock wool.

2.2 Safety Requirements for Electrical Wiring

New insulation, installed in contact with active knob-and-tube wiring, must be approved in writing by a licensed electrician.

All electrical splices, junctions, connections, fixtures, and switches should be contained in covered electrical boxes prior to being covered with insulation. Flag these boxes so that they are clearly visible in the attic.

2.2.1 Electrical Safety

Observe the following best practices for electrical safety in weatherizing existing homes. Tell the homeowner about any component of an electrical system that is found to be substandard before weatherization measures limit access to the system.

- When damage to the wiring is possible, use a non-contact voltage tester to determine whether circuits are live. Turn circuits off at circuit breakers as appropriate.
- Inspect wiring, fuses, and circuit breakers to verify that wiring isn't overloaded. Maximum ampacity for 14-gauge wire is 15 amps and for 12-gauge wire is 20 amps.
- Don't allow metal insulation shields around heat-producing objects to contact wiring.
- Verify that the electrical system is grounded to either a ground rod or to a water pipe with an uninterrupted electrical connection to the ground.
- Perform a voltage-drop test to evaluate the size and condition of hidden wiring on older homes if appropriate.
- Whenever you doubt the integrity of a home's electrical system, use a generator to power insulation blowers and other large power tools.

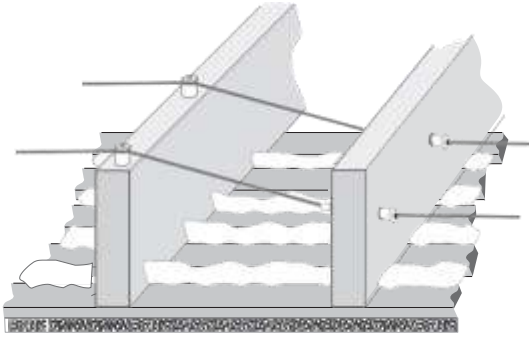

Knob and tube wiring: Obsolete and worn wiring should be replaced during energy retrofit work so that building cavities can be sufficiently insulated.

Non contact voltage tester: Test voltage wires near your work area and to turn off the circuit if appropriate.

2.2.2 Decommissioning Knob-and-Tube Wiring

Knob-and-tube wiring is dangerous because its insulation is probably old, brittle, and deteriorating. Bare wire is usually visible in some parts of the knob-and-tube installation. Decommission knob-and-tube wiring before or during weatherization if possible.

Use a non-contact voltage tester to determine whether the knob-and-tube wiring is live. If you're unsure about whether the wiring is still live, schedule an inspection by a qualified and experienced electrician.

If the knob-and-tube wiring in an attic is live, ask an electrician or an electrical inspector to determine whether the attic wiring can be decommissioned and replaced with non-metallic sheathed electrical cable.

Depending on the situation, the electrician may choose one of these two options.

1. Terminate the existing attic knob-and-tube wiring and connect the new non-metallic (NM) cable directly to the main service box.
2. Install a flagged junction box in the attic to connect the knob-and-tube riser to new NM cable.

Consider installing a hard-wired CO-and-smoke detector in a common area near the bedrooms on the new circuit.

2.3 Carbon Monoxide Alarms

Carbon monoxide (CO) is a colorless, odorless, poisonous gas. CO is released by unvented gas space heaters, kerosene space heaters, backdrafting vented space heaters, gas ranges, leaky wood stoves, and motor vehicles idling in an attached garage. Central furnaces and boilers that backdraft may also lead to high levels of CO.

When contractors perform whole-house air sealing, prescriptive air sealing, or duct sealing, they must verify that the home has a working CO alarm if the home has a combustion appliance.

All CO alarms must be Underwriters Laboratories (UL) listed, Canadian UL (CUL) listed, or equivalent. If the home has no CO alarm, install the alarm according to manufacturer's instructions.

2.3.1 CO Alarms: Installation Best Practices

Standard carbon monoxide alarms alert occupants to dangerously high levels of CO in a home. However, CO can have health impacts at lower CO concentrations if people are exposed for long time periods. Certain homes may benefit from advanced alarms that can detect low levels of CO, have a constant readout, and a memory function that logs the highest CO level measured. Follow manufacturer's instructions when installing a CO alarm.

Don't install CO alarms in these situations.

- In a room that may get too hot or cold for alarm to function properly.
- Within 5 feet of a combustion appliance, vent, or chimney.
- Within 5 feet of a storage area for vapor-producing chemicals.
- Within 12 inches of exterior doors and windows.
- Within a furnace closet or room.
- With an electrical connection to a switched circuit.
- With a connection to a ground-fault circuit interrupter (GFCI).

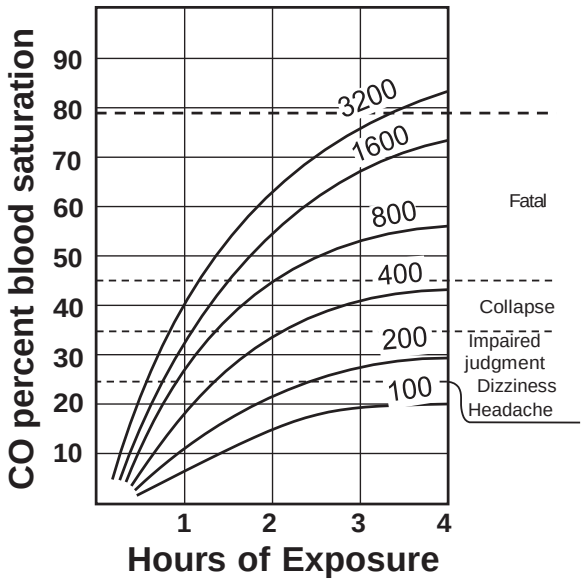

Effects of CO: With exposure to progressively higher levels of CO, the symptoms become more serious.

3 INSTALLER RECORD

The installer of any measure covered by this specification manual should complete an Installer Record. Permanently post the Installer Record at the electrical panel, circuit box, or other location approved by the homeowner as a record of work performed. The installer may provide a copy to the utility, and the Installer Record should contain the following information as appropriate.

1. Residence address.
2. Installation date.
3. Name, address and phone number of the Installer.
4. Building component(s) that have been insulated: ceilings, walls, floors, pipes, or ductwork.
5. Square footage of each of the components insulated.
6. Estimated R-values of pre-retrofit insulation and post-retrofit insulation.
7. Area (plus bag count if applicable), added R-value, depth and type (including product name) of insulation installed.
8. A label or chart for any loose-fill insulation showing R-value per inch or R-value at installed depth.
9. A report of air sealing completed, with final whole house leakage test results if applicable. List primary areas or building components that workers air sealed in the report.
10. A report of any duct sealing that was completed, with final duct leakage test results if applicable. List areas with ductwork that were sealed.
11. A list of rough opening areas or dimensions of any windows and doors that were replaced, and U-factors of each window and door.
12. A list and description of any newly installed fans or mechanical ventilation systems, including design airflow rate and control strategy.

4 Attic and Roof-Cavity Insulation

Attic and roof-cavity insulation reduces the heat loss in winter and heat gain in summer. Attics are especially important because they are exposed to the most extreme air temperatures of any building component. Poorly insulated ceilings waste the most energy during winter, when attic temperatures remain low for months at a time. In some cases, completely uninsulated attic sections cause condensation and mold on the inside of the home due to low surface temperatures. During the summer, a poorly insulated attic can reach 160 degrees and over-heat the living area.

Adding insulation can improve the thermal performance of a home, but it can also cause problems if not properly installed. Contractors should know that mistakes or shortcuts can reduce the insulation's thermal resistance or durability. Insulate to the maximum level possible. Check with local code or utility weatherization programs for minimum insulation levels. Comply with the following preparation and installation requirements for attic and roof-cavity insulation.

4.1 Preparation for Attic and Roof-Cavity Insulation

Before insulating, contractors must prepare an attic so that weatherization measures are as effective as possible, are durable and long-lasting, and create no negative unintended consequences. Shields protect the heat-producing fixtures, such as recessed light fixtures and chimneys, from overheating and creating a fire hazard after the insulation is installed. Dams hold insulation in place and maintain the full R-value where insulation levels differ.

4.1.1 General Attic/Roof Preparation

Remove all degradable and absorbent scrap materials from the attic that might eventually rot and damage the structure, especially wood and cardboard. Repair any water leaks and moisture damage prior to performing work.

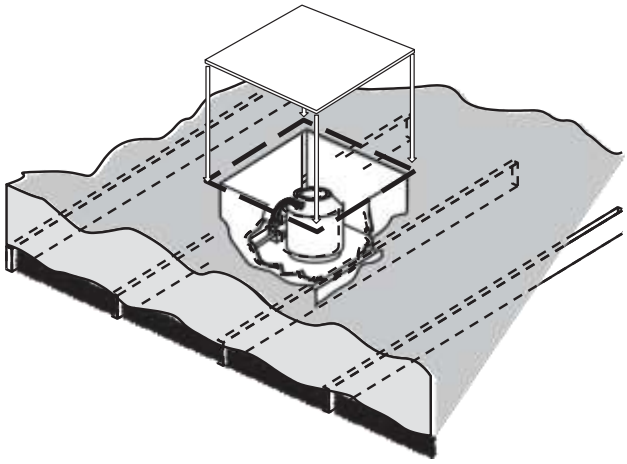

Air-sealed drywall box: This airtight drywall box serves as both an air seal and an insulation shield.

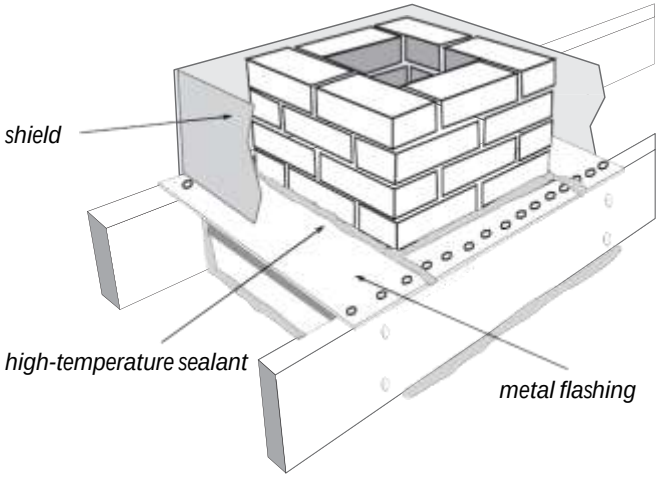

Air-sealed chimney with metal shield: Metal flashing bridges the gap between the chimney and the framing and a metal shield keeps the insulation 3 inches away from the chimney.

4.1.2 Attic Insulation Shields

Insulation shields are structures that prevent insulation from touching recessed light fixtures and combustion vents. If covered by insulation, non-Insulation Contact (non-IC) rated light fixtures may cycle on and off or be damaged by excess heat. Combustion vents could damage insulation and cause a fire if they over-heat. Recessed lighting fixtures and exhaust fans that are rated by UL as Insulation Contact (IC-rated) may be covered with insulation.

1. Attach rigid, non-combustible shields to the ceiling structure to maintain a 3-inch clearance around the perimeter of recessed light fixtures and other heat producing fixtures that aren't IC rated.
   a) Exhaust fans without light fixtures and exhaust fans with IC-rated fixtures are not considered heat-producing fixtures, and do not require shielding.
2. Insulation shields must extend at least 4 inches above the level of the new insulation, and any insulation must be removed from the top and inside of the insulation shield.
3. Contractors may install non-combustible insulation (labeled as meeting ASTM E-136) with no clearance around flues and chimneys if permitted by a local code official.

The shielding enclosure may serve as an air-seal for the chimney or light fixture. See *"Prescriptive Attic Air Sealing (Optional)"* for more information on air sealing.

4.1.3 Insulation Dams and Baffles

Insulation dams maintain the insulation's full R-value to the edge of an insulated space, and prevent blown insulation from blocking vents or spilling into uninsulated areas or into the living space through the attic access. Without a dam, installers may have difficulty insulating to the full depth near attic hatches and borders between the house and attached garage. This insulation flaw reduces the performance of the insulated attic.

Insulation dams must use one of the following two methods.

a. Build dams with rigid materials such as plywood, OSB, foam board, or cardboard. Permanently secure the dam to attic framing. Rigid dams must extend four inches above the final level of the insulation. Use durable materials like OSB or plywood for areas where occupants may need access.

b. Dams made of batts are a good solution when attic framing doesn't allow for construction of a rigid dam. Create dams with fiberglass batts laid flat that are at least 15 inches wide and that create an R-value equal to the R-value of the remainder of the attic.

4.1.4 Baffles for Eave and Soffit Vents

Vents are installed in attic eaves and soffits to direct ventilation air past insulation and into the attic. Before insulating the attic, install baffles at eave and soffit vents to prevent blockage of the vents and to maintain a path for airflow under the roof deck. Baffles also prevent wind-washing of insulation. Install baffles 2 inches away from the roof deck and staple them to the inside of the rafter. Install baffles with 2 inches of clearance from the roof deck and staple the baffles to the inside of the rafter.

Follow these steps when installing eave baffles.

1. Remove any existing insulation or other debris from the eave or soffit vents.
2. Baffles must be rigid and air impermeable.
3. Baffles must extend at least 4 inches above the final level of insulation.
4. Maintain an opening between the baffle and the roof sheathing equal to or greater than the area of the soffit vent.
5. Install the baffle far enough into the rafter bay to reach the exterior side of the top plate in order to achieve the best R-value possible above the top plate.
6. Fasten the baffles to the roof rafters with no less than $^{9}/_{16}$-inch galvanized staples or roofing nails.
7. Address continuous soffit ventilation with one of the following methods.
   a. Where a continuous soffit vent exists, install a baffle in each rafter bay.
   b. Install baffles, equally spaced along the soffit. Seal the unbaffled rafter bays with a rigid, moisture-resistant material.

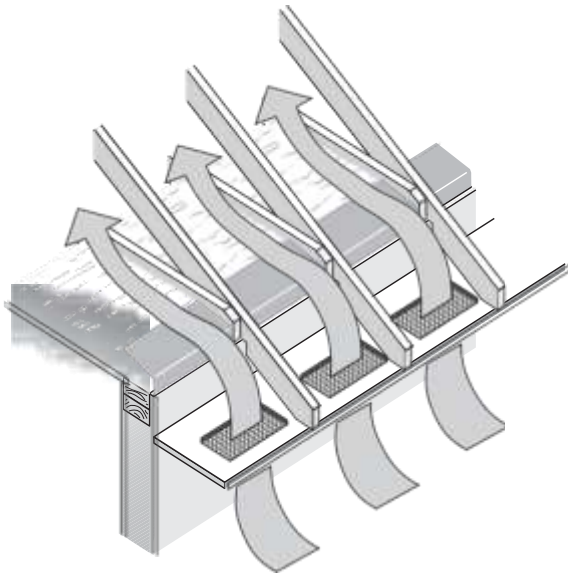

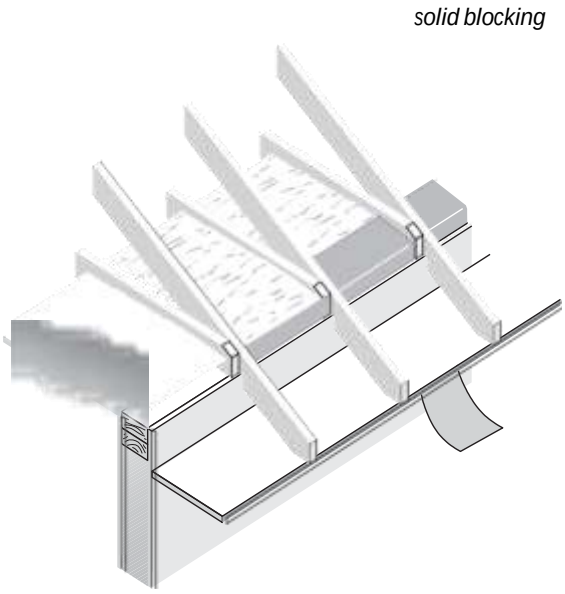

Baffles: Maintain opening for ventilation air. Baffle must reach the top plate and extend 4” above the new insulation.

Skipping a rafter bay: Instead of venting and baffling a rafter bay, plug the end of the rafter bay.

4.1.5 Pipe Insulation

Exposed water pipes in attics may freeze or lose energy to the cold air. If water or hydronic pipes won't be covered by at least one inch of attic insulation, wrap the pipes according to *"Hydronic and Water-Pipe Insulation"*.

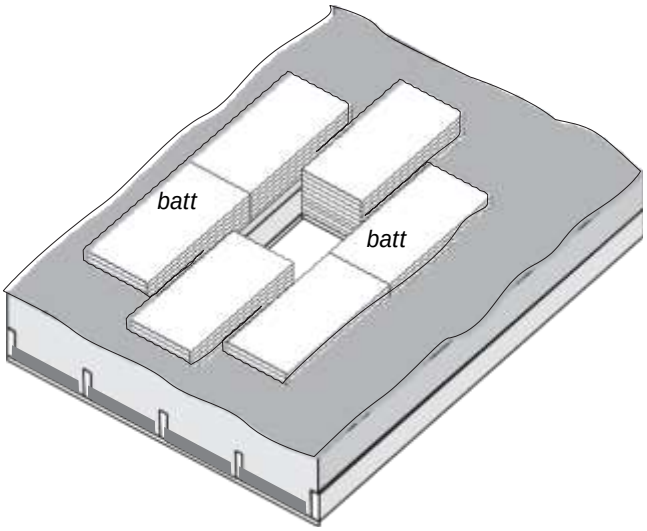

Batts form attic-insulation dam: Where head space is limited, fiberglass batts are a good choice for a low-profile insulation dam.

Insulated and air-sealed dam: The contractor sprayed foam around this opening to air seal and insulate the hatch opening.

4.2 Passive Attic Ventilation

Air leakage can carry moisture from the living space into an attic. Moisture also migrates through vapor-permeable building materials into the attic. In most homes, air leakage is the primary cause of attic moisture problems. Once in the attic, moisture can condense on colder surfaces and cause rot or mold growth. Adding insulation to the ceiling can make moisture problems worse because less heat migrates to the attic to dry the building materials after the insulation is installed.

Attic ventilation helps to keep the attic dry and helps prevent ice dams in cold climates. Each separate attic space must meet the following requirements. Exception: Code officials may determine that attic ventilation is unnecessary because of local conditions.

1. The net free area (NFA) of attic vents must be no less than 1/150 of the area of the space ventilated.
2. The NFA may be reduced to 1/300 of the area, provided that at least 40% and no more than 60% of the required ventilating area is provided by vents located within 3 feet of the ridge.
3. Vents must have screens with an opening of not more than 1/4 inch and not less than 1/16 inch.
4. Vents on exposed vertical surfaces must have louvers.
5. Contractors must not install air turbines in order to comply with the ventilation requirements of this section. However, contractors may include the net free area of existing air turbines by estimating the net free area of the air turbine in a fixed position (not turning).

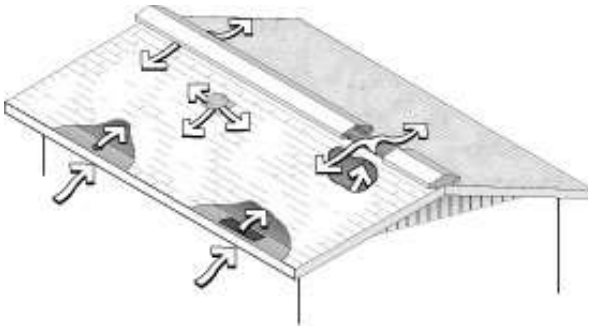

Low and high attic ventilation:
Distributed ventilation — high and low — is more effective than vents that aren't distributed

4.2.1 Vented Vaulted Ceilings

Avoid installing air-permeable or vapor-permeable insulation in contact with the roof deck (except in the case of finished attics described in *"Sloped Roof Cavities in Finished Attics"* and in the eaves at the perimeter of a flat attic). Moisture can bypass porous insulation and condense on the roof deck. If this occurs, the insulation keeps the moisture from drying in a timely manner. Comply with these ventilation requirements when installing insulation in a vaulted attic.

1. If insulation is added to a vented vaulted ceiling or a vented cathedral ceiling, maintain a 1- inch air space between the insulation and the roof sheathing.
2. Each roof cavity must have an upper vent and a lower vent, allowing air to flow continuously and effectively dry the roof deck.

4.3 Exhaust Fans

Moisture created by cooking, showering, and laundry can raise the indoor relative humidity and cause condensation. Exhaust fans control indoor moisture, prevent condensation, and keep indoor air fresh. However, fans are often vented directly into the attic, where moisture can condense on cold surfaces and cause damage.

New and existing exhaust fans must vent directly to the outdoors (through a roof jack, gable, or wall) and never into an attic or into another location within the home.

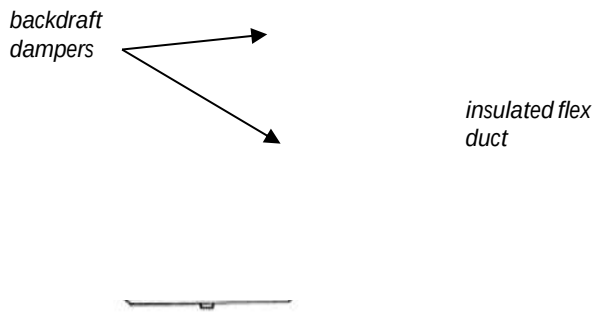

Exhaust fan: An exhaust fan should vent to the outdoors through an insulated duct. The exhaust fan should have a backdraft damper, either in the fan housing or the termination fitting.

4.3.1 Exhaust Fans and Ducts

The quality of exhaust fans has improved considerably over the past few years. Many homes have fans that are loud or ineffective at exhausting air. Encourage the homeowner to replace these fans with more effective models if they are concerned about humidity in the area. Ducts with too many turns, restrictions, or leaks may reduce the ability of fans to exhaust pollutants. In these cases, replacing exhaust ducts with newer ducts improves the fan's effectiveness. Ducts for kitchen fans and bathroom fans must comply with the following requirements.

1. Exhaust ducts must be sheet metal or HVAC flex-duct and insulated to a minimum of R-4 if in unconditioned space. Vinyl coil ducts must be replaced.
2. Any newly installed exhaust ducts must be sized according to *"Exhaust Fan Prescriptive Duct Sizing".*
3. All exhaust fans must vent to the outdoors. Ducts must be mechanically fastened using sheet metal screw or clamps and be substantially airtight. Mechanical fasteners must not interfere with dampers.
4. Exhaust fan ducts should be adequately supported to prevent sagging, be as straight as possible to maximize effective air flow, and have no more than two 90-degree turns, or equivalent.
5. Kitchen exhaust ducts must be made of 28-gauge galvanized steel, stainless steel, aluminum, or copper
6. Existing rigid or flexible metal vent ducts may remain if they are free of holes and kinks and are otherwise in good condition.

4.3.2 Clothes Dryer Exhaust

Like ducts for exhaust fans, dryer exhaust ducts located in attics must vent to the outdoors and comply with these requirements.

1. Dryer exhaust ducts that pass through attics must be vented to the outdoors, sealed to prevent exhaust air from entering the building, have a backdraft damper, and terminate in a code-approved vent cap.
2. New dryer ducts must be rigid metal, securely connected with metal clamps and UL- rated foil tape, permanently supported, and sized according to the manufacturer's specifications. To prevent blockage with lint, don't connect new dryer vent ducts with screws. Blocked dryer vents are a leading cause of house fires.
3. Exhaust systems must comply with local code and manufacturer specifications, not exceed 25 feet, be as straight as practical, and slope downward to allow condensate to drain toward the termination fitting.
4.

4.4 Prescriptive Attic Air Sealing (Optional)

Prescriptive air sealing saves energy, improves comfort, prevents insulation from escaping the attic, and reduces the risk of condensation in the attic. Heated, conditioned air is more buoyant than cold winter air

and rises through holes in the ceiling, wasting energy. This air movement through the insulation reduces the insulation's effectiveness. Warm, moist indoor air carries moisture into the attic, which condenses on cold wood framing in the attic. Move insulation as necessary to find and seal all accessible gaps and penetrations between conditioned space and the attic to seal air leaks. Then either cover the leaks with new insulation or replace the original insulation. Follow these instructions to seal air leaks where you find them.

Table 3 - Attic Air Sealing Requirements

Item	Sealing requirements between conditioned and unconditioned space or the outdoors
Attic hatch/door	Install weatherstripping to create an effective air seal between the attic access frame and hatch/door.
Pull down stair cover	Install a gasket or weatherstripping between frame and door or install an airtight cover between the stairs and attic.
Duct penetrations	Apply mastic, caulk, or other airtight seal around the perimeter of duct boots between the boot and the ceiling.
Chases	Install foam, caulking, and rigid barriers to the attic floor or wall. Near heat-producing devices, provide clearances to combustible materials and use fire-rated materials as appropriate.
Recessed cans (non-IC)	Install foam, caulk or another airtight seal between fixture and ceiling. Or install an airtight drywall box or another non-flammable air-sealed insulation box. Maintain a 3 inch clearance on all sides and above the fixture. Extend the box above the new insulation so that no insulation covers the top
Recessed Cans (IC)	Seal between the interior finish and the fixture. Don't seal over the fixture with spray foam or seal openings in the fixture. An airtight box or prefabricated cover is acceptable. Insulate over the fixture with fibrous insulation.
Bath fans	Apply foam, caulk, or other airtight seal around the fixture perimeter.
Bath fans with heat source	Use fire-resistant caulk. If the opening is larger than 1 inch, span the gap with sheet metal.
Electrical and plumbing penetrations	Apply foam, caulk or other airtight seal around perimeter of electrical fixtures and plumbing penetrations.
Top plates	Seal all accessible drywall-to-top-plate connections, wood-to-wood seams, and penetrations through the top plate with foam or caulk.
Drop soffits	Install rigid material to close off the soffit from the attic, and seal the rigid material with foam or caulk.
Knee wall doors	Attach weatherstripping permanently to create an effective air seal between the attic access frame and the hatch or door. Install a latch or handle if necessary.
Floor-joist cavities under knee walls	Install rigid material between the joists; then foam or caulk the perimeter of each joist space. Alternatively, roll a fiberglass batt to fit tightly between each joist and cover with foam.
Open wall cavities	Install foam, caulk, or rigid board at the top of balloon-framed walls and to open walls between split-level attic areas.

The following locations are considered "not accessible."

a. Where building structure or mechanically fastened materials block access.

b. Any air sealing opportunities immediately adjacent to eve line (i.e. top plates, electrical and plumbing penetrations, can lights, drop soffits).

c. Attic penetrations covered by more than 5 inches of lose-fill insulation or a combination of loose-fill and batt existing insulation.

4.5 Attic Insulation: Installation

Attic insulation must be carefully installed to effectively reduce energy waste and improve the comfort of a home. Take care to thoroughly insulate the entire attic area. Flaws such as voids or gaps allow heat to be transferred into the attic. Leave no voids or low levels of insulation.

4.5.1 Blown Attic Insulation

When installed correctly, blown insulation forms a seamless blanket with no gaps or voids. Blown fibrous attic insulation always settles: cellulose usually settles 10% to 20% and fiberglass settles 3% to 10%. Blowing attic insulation at the highest achievable density helps minimize settling and air movement within the blown insulation.

If the contractor chooses to do attic air sealing, the air sealing should occur before the attic insulation is installed. This may require removing existing insulation and debris that prevents effective air sealing.

Install loose-fill insulation to the surface between the conditioned space and attic with a uniform R-value. Comply with these steps when installing loose-fill attic insulation.

1. Calculate the number of bags of blown insulation needed to achieve the R-value specified on the work order from the table on the bag's label.
2. Install an insulation depth ruler for every 300 square feet of attic area. Depth rulers should face the attic entrance.
3. Adjust the blower to move as much insulation as possible through the blower hose with the available air pressure. The more that the insulation is packed together while flowing through the blowing hose, the greater the insulation's installed density will be.
4. Insulating the eaves fully can be difficult, but substandard insulation in these areas can reduce the effectiveness of the entire insulation project by 10%. Pack insulation against the eave baffle or roof deck to achieve the highest possible R-value in places where the full intended thickness of insulation won't fit.
5. When filling a tight eave space, push the hose out to the edge of the ceiling. Allow the insulation to fill and pack before pulling the hose back towards you.
6. Fill the edges of the attic first, near the eaves or gable end, then fill the center.
7. Install insulation to a consistent depth. Level the insulation if necessary.
8. Post an insulation certificate near the attic entrance to facilitate inspection.

Blown-in attic insulation: Blown insulation achieves more continuous coverage than batts. Blow insulation at a high density to minimize settling and air convection within the insulation.

4.5.2 Batt-Type Insulation

Batts can be easily installed by one person and require no special equipment. However, batts can be difficult to install without gaps or voids, and these flaws reduce the effectiveness of the insulation. Install batts in contact with the surface between the conditioned space and attic, cut to fit, and placed tightly together with no gaps except those required for clearance around heat-producing fixtures.

1. Install baffles and shields prior to installing batt-type insulation.
2. Cover the exterior of the top plates of exterior walls. You may compress the batts at the eaves if necessary to cover the top plates. Be careful not to push vent baffles out of position. Maintain an opening for fresh air.
3. Where practical, place one layer of batts between the joists and add a layer either perpendicular to or offset from the first layer to cover the seams and minimize voids in the insulation.

4.5.3 Foam Insulation

Foam insulation provides excellent insulating and air sealing performance. In an open attic, a sloped roof cavity, or an attic knee wall, both spray and rigid foam are acceptable types of insulation, provided they meet the following requirements.

Fire Barriers: An *ignition barrier* is a material that prevents or delays the ignition of foam. A *thermal barrier* delays heat from a fire from igniting the combustible materials behind the ignition barrier.

1. The foam insulation must meet the minimum requirements for R-value. Contractors must install the foam insulation in contact with the surface that separates attic and conditioned space.
2. The foam insulation must comply with thermal-barrier and ignition-barrier code requirements for "foam plastics," as defined by the local building code or allowed by local building officials.

4.5.4 Vapor Retarders

Warm air holds more water vapor than cold air. During winter in the Northwest, people add moisture to warm indoor air during normal daily activity, which then can diffuse through building materials and enter cold building cavities such as attics. As the water vapor cools, it condenses as water on wood structures,

which can cause damage over time. Vapor retarders are used to slow the rate of moisture diffusion from warm locations to cold ones.

Vapor retarders aren't necessarily airtight. Air leakage can carry a much greater volume of water vapor through the ceiling assembly compared to the amount of water vapor that can diffuse through the ceiling. In temperate areas of the Northwest, the benefit of vapor retarders is so small that they aren't considered necessary for weatherization. However, in regions with cold winters, vapor retarders and air sealing are both useful tools for improving building durability.

You don't usually need to install faced fiberglass batts because the vapor retarder isn't usually necessary. If fiberglass batts with a vapor-retarder facing are installed in an attic with no existing insulation, the vapor retarder must touch the attic side of the drywall or plaster ceiling. If insulation already exists in an attic, don't install batts with a vapor retarder on top of the existing insulation.

See the *"Glossary"* for definitions of *vapor retarder* and *vapor barrier.*

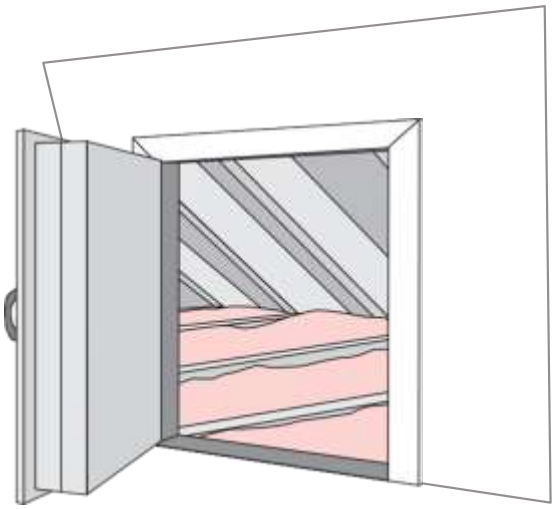

Insulated attic hatch: Insulation prevents heat transfer through the access door. Install insulation to achieve R-13. Glue foam together in layers, and secure fiberglass with twine or wrap.

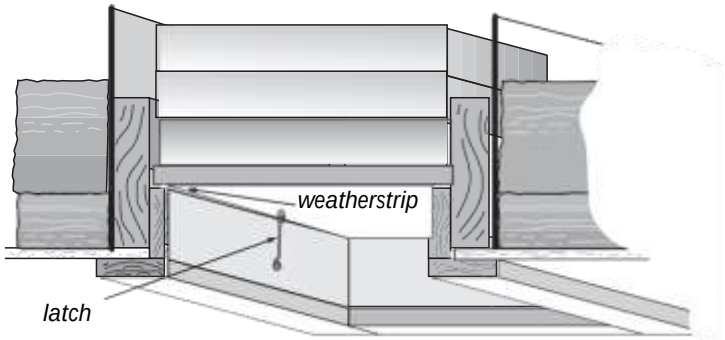

Insulated attic hatch: Building a dam prevents loose-fill insulation from falling down the hatchway. Foam insulation prevents heat transfer through the access hatch. Install insulation to achieve attic-insulation R-value of R-30.

4.5.5 Interior Attic Access Doors

Attic access doors are commonly left un-insulated. Sometimes service contractors remove the insulation from the door when they access utilities in the attic. In summer, when attics can be extremely hot, even uninsulated areas as small as an attic hatch can overheat an area of the home. The lack of insulation on hatch doors wastes energy, contributes to occupant discomfort, and can cause condensation during the winter.

Access doors must be insulated and sealed in a durable and effective manner. Comply with the following requirements for interior access doors to the attic when insulating the attic.

1. Permanently attach weatherstripping to the attic-access door or frame to create an effective air seal between the door frame and the door. Repair air leaks or replace the door prior to insulating. Insulate vertical access doors to at least R-11 and horizontal access doors to at least R-30 using one of these three methods.
    a. Attach batt-type insulation to the door with twine, wire, or vapor-permeable house wrap. Attach the twine, wire, or house wrap to the door in order to secure the batt. A vapor-permeable air barrier material must cover the fiberglass door insulation if occupants enter the attic for storage or maintenance.
    b. Attach foam board using construction adhesive to achieve R-30 or greatest attainable R-value that still allows the door to function.
    c. Install R-5 or greater rigid foam insulation between the access door and a rigid protective material (plywood or other durable rigid material) attached over the entire insulation area. Seal the rigid insulation around the perimeter to the access door using caulk, adhesive or spray foam. Air seal the access cover assembly using weatherstripping around the entire perimeter.

2. Install a dam around the attic hatch opening to maintain the full level of ceiling insulation to the edge of the opening and to prevent insulation from falling into the living space. Comply with one of the following options to build a dam.
   a. Frame the opening with dimension lumber, OSB, or plywood. Permanently attach the framing and extend it at least 4 inches above the final level of insulation. Don't use cardboard or foam board to dam around access hatches. Cardboard and foam board aren't durable materials where they are readily accessible to occupants.
   b. Place a minimum of 15-inch wide insulation batt laid flat, with an R-value equal to that specified for the attic, tightly around the perimeter of the access opening. Install the dam with no gaps or voids. Maintain a consistent level of insulation in all outward directions from the access opening, including corners.

4.5.6 Pull-Down Stairs

Pull-down stairs are both an attic hatch and a folding stairway for occupants to access the attic. Like any hinged door, the pull-down stairs needs careful air sealing to prevent warm, moist air from escaping into the attic, which wastes energy and could cause condensation on the roof deck. Comply with these requirements when a pull-down-stair assembly separates the attic from the conditioned space of the house.

Insulation Flaws: Heat transmission through an assembly is dominated by areas with lower levels of insulation. For example, a 1000-square-foot attic insulated to R-38, but with an uninsulated pull-down stair of 10-square feet loses heat at the same rate as an attic insulated to R-28. If that same attic has an R-10 stair cover, the performance of the assembly is R-36.

1. Weatherstrip and insulate all pull-down stairs in heated areas to a minimum of R-10. Often, the most effective way to seal and insulate a pull-down stair is to build a box over the top using rigid foam insulation. This box should be sealed at the edges and have latches to hold it in place.
2. Contractors may install new pull-down stair assemblies with a minimum R-5 insulation rating. The insulation must be between conditioned space and the attic stair assembly and gaskets or weatherstripping must minimize air leakage.

Manufactured retractable-stair cover: Magnetic tape or weatherstripping seals this manufactured molded polystyrene insulated cover around the perimeter.

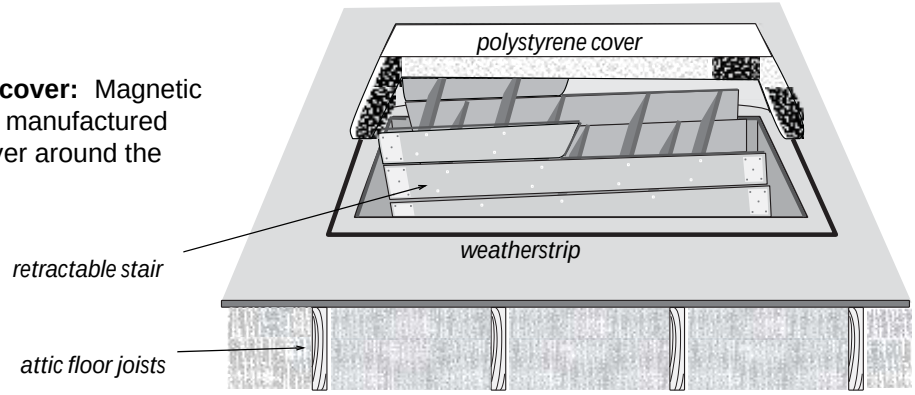

4.5.7 Exterior Attic Access Doors

Any outside access door with continuous exposure to the outdoors must be weatherproof and animal-proof.

4.5.8 Walls in Attic Areas

Insulating walls in attic areas completes the thermal envelope between the attic and the living space. Uninsulated or poorly insulated walls in the attic waste energy and cause comfort problems. Frequently, gravity pulls insulation away from the wall. Comply with all of these requirements for open walls in attic areas.

1. Seal all penetrations through the wall with caulk or foam.
2. Install wall insulation prior to installing ceiling insulation. This insulation must be a minimum of R-11 in a 2x4 cavity, and R-21 in a 2x6 cavity.
3. When adding new insulation over existing wall insulation, completely fill the cavity.
4. If you install a vapor retarder, install it in contact with the heated surface.
5. Cover new or existing attic wall insulation with a durable, vapor-permeable air barrier material to prevent air penetration of the insulation and to ensure that the insulation is held in full contact with the wall. Fasten the air-barrier material so that it permanently supports the knee wall insulation.
6. Insulate knee wall access door and hatches to R-11 and weatherstrip them to create an effective air seal. Pre-manufactured foam-core doors are an acceptable option. If side attic area will be accessed (used for storage), cover the insulation with a vapor-permeable material.

4.5.9 Floored Attics

Uninsulated areas, however small, cause a disproportionately large energy loss. Make an extra effort to insulate under storage decks or floored attics to the fullest extent possible. Install a dam around the perimeter of the decked storage area according to *"Insulation Dams"* and maintain the full level of insulation around the dam. Comply with these requirements when insulating under floor boards of floored attics.

1. Cavities below decked storage areas must be insulated to the highest practical level.
2. Light fixtures below decked storage areas must be IC-rated.
3. Insulate under attic floor boards with tightly packed blown fibrous insulation. To fill the cavities, lift the boards or drill holes no more than 4 feet apart. Avoid over-filling the cavities, because the pressure can damage the ceiling materials below.
4. If installing insulation in non-decked areas of the attic, prevent loose-fill insulation from falling onto the storage deck using a dam according to "Insulation Dams".
5. Sweep or vacuum spilled insulation off the storage decking after installation.

Finished attic floor: Find the large air leaks underneath the flooring and seal them before insulating the space between the joists.

4.6 Unvented Attics

Insulating the roof deck brings the attic inside the thermal envelope. This practice may be appropriate when attics are used for storage, during a remodel, or when an air handler is located in an attic.

Insulating the underside of the roof to create an unvented attic requires special consideration to protect the roof from moisture. For instance, without insulation, a vented roof can absorb moisture and dry quickly without damage. The application of insulation to the roof deck can prevent moisture from evaporating, eventually causing damage to the roof. Additional steps are needed to protect the roof from moisture. An insulated, unvented roof requires 3 components to be durable:

1. A continuous air barrier.
2. A vapor retarder.
3. Adequate R-value.

The air barrier prevents moisture-laden air from contacting the roof deck and condensing. The vapor retarder prevents moisture from migrating through the insulation materials and contacting the roof deck. Finally, the insulation must have a high enough R-value to keep the vapor retarder warm and deter condensation on the cold surface.

Foam insulation provides both an air barrier and a vapor retarder in addition to roof insulation. Check local codes to determine the required R-value for maintaining warm surface temperatures. Comply with these requirements when insulating the roof cavities of unvented attics.

1. Insulate roofs to the maximum R-value possible or a minimum of R-24.
2. The unvented attic must be entirely within the building's thermal envelope. Seal the roof deck and any gable walls to insure that the unvented attic is insulated and air sealed on all sides.
3. The insulation must be an air-impermeable vapor retarder to prevent condensation on the bottom side of the roof deck caused by moisture movement around or through the insulation. Or, the insulation must be air impermeable and have a separate vapor retarder installed in contact with the

interior surface of the insulation.

4. There must be no vapor retarder installed in the ceiling (attic floor).
5. Rigid foam insulation installed in an unvented attic or roof cavity must be sealed at the perimeter of the foam and at all seams to create a continuous air barrier. If the insulation will be covered, the Utility will perform an in-progress inspection to verify the insulation board is properly installed and sealed. The in-progress inspection must be documented in the house permanent file.
6. Most foam insulation products don't meet requirements for thermal and ignition barriers, and must be protected from fire danger.
   a) If the attic is occupied, used for storage, or accessed through a full-sized stairway and door, cover the foam insulation with a thermal barrier such as drywall, E84 Class-A-Certified intumescent paint, or an FSK-faced fiberglass blanket classified E-84.
   b) If people only enter the attic to service utilities through a hatch, cover the spray foam insulation with an ignition barrier, such as any of the items in (a) above, 1½ inches of fiberglass or cellulose, or other practice as allowed by building code.

Unvented attic: Insulate the roof decking with an air-impermeable vapor barrier.

4.7 Sloped Roof Cavities in Finished Attics

Homes with attics that have been converted to living space often experience high bills and considerable comfort issues in that space. Contractors may install tightly packed fibrous insulation, including fiberglass, cellulose, or rock wool, in the sloped roof cavities of a finished attic.

Insulation may fill the entire cavity if the sloped ceiling is located between upper (peak) and lower (rake) ventilated attic spaces. Sloped-roof insulation must meet these requirements.

1. Install a vapor-permeable containment material at the lower cavity openings.
2. Cover the finished side of the slope with a continuous air barrier between the conditioned living space and the insulation. This prevents moisture from infiltrating the insulation.
3. All recessed fixtures in the insulated assembly must be UL rated for Insulation Contact Air-Tight (ICAT).

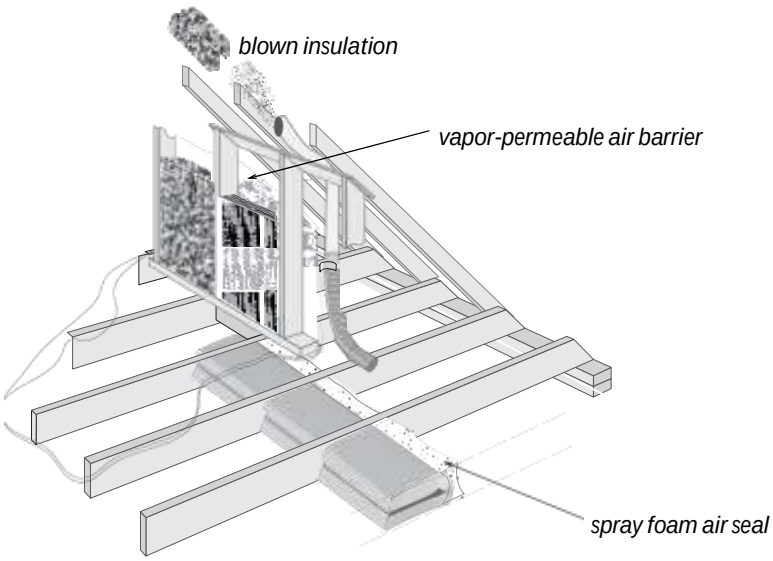

Finished attic best practices: Air sealing and insulation combine to dramatically improve comfort in homes with finished attics.

4.8 Exterior Roof Insulation

Homes with flat roofs often have very little insulation, creating comfort issues with the occupants, high bills, and concerns about the durability of the roof structure. Insulating the exterior of the roof provides greater R-value than can otherwise be achieved. Other types of houses, such as those with unvented vaulted ceilings, may also benefit from exterior roof insulation. The contractor should install the exterior roof insulation at the same time the roof is replaced. Integrate the insulation, roof sheathing, and the roofing material into a thoroughly watertight and well-insulated assembly. Contractors must comply with these requirements when installing exterior roof insulation.

1. Insulate over the roof deck or roofing with rigid foam board insulation to achieve a minimum of R-20.
2. Don't insulate over vented cavities (for example: vaulted ceilings with vented spaces, attics, sloped ceilings connected to attics and/or knee wall spaces).
3. Roof drainage systems must function after insulation is installed. Suppliers of expanded polystyrene often taper the foam to route water to the existing drains or scuppers.
4. Contractors should replace recessed lights in insulated roof cavities with fixtures labeled Insulation Contact and Air-Tight (ICAT) rated. All penetrations through the roof covering and all joints between the roof covering and vertical surfaces (for example: walls, chimneys, etc.) must be flashed and sealed to prevent water leaks.
5. After the contractor installs the rigid insulation and before the insulation is covered by the sheathing and roofing, the Utility should perform an in-progress inspection to verify the insulation board is properly installed and sealed. The in-progress inspection must be documented in the house permanent file.

5 Manufactured Homes: Ceiling and Roof Insulation

The definition of a manufactured home is "a structure, transportable in one or more sections" and "is built on a permanent chassis and designed to be used as a dwelling with or without a permanent foundation when connected to the required utilities, and includes the plumbing, heating, air-conditioning, electrical systems contained therein" (source: Part 3280, Manufactured Home Construction and Safety Standards, Oct. 1994).

Manufactured homes include older models, previously called mobile homes. Mobile home is often used as a synonym for manufactured home. This manual uses "manufactured home" when referring to both newer and older manufactured homes. Insulate to the maximum level possible. Check with local code or utility weatherization programs for minimum insulation levels.

5.1 General Requirements for Insulating Ceilings and Roofs

Many manufactured homes are built with inadequate levels of insulation. Damage to the thermal envelope of manufactured homes is common during transport, maintenance, or repair. Comply with these general requirements for insulating the roof cavities and attics of manufactured homes.

1. Seal all ceiling penetrations before insulating ceiling cavities.
2. If the ceiling cavity contains a non-ducted return-air system, seal the opening to the attic and provide return air, either through ductwork or vent to the main area of the home.
3. For vented roof cavities, comply with all applicable requirements in *"Attic and Roof-Cavity Insulation"*.
4. Insulate ceiling cavities under flat or crowned metal roofs by completely filling them with blown-in fiberglass insulation. Seal all existing attic ventilation except existing roof jacks. If possible, install insulation on the exterior roof surface to reduce the potential for moisture condensation in the roof cavity.
5. Insulate attics under pitched roofs to R-38 when possible, and ventilate the attic to comply with *"Passive Attic Ventilation"*.
6. Exhaust fans and ducts along with dryer ducts, located in the roof cavity, must comply with requirements in *"Exhaust Fans and Ducts"*.

5.2 Exterior Roof Insulation

Contractors install exterior insulation when they replace or re-roof over the existing flat roof. Exterior insulation keeps the roof cavity warm, reducing the potential for condensation. Contractors must comply with these insulation requirements when adding exterior roof insulation.

1. Install exterior roof insulation to a minimum of R-7.
2. Fully insulate the ceiling cavity below and eliminate all vents. Don't install insulation over vented ceiling cavities or over cavities containing air spaces.

3. Roof systems must effectively drain water away from the structure. All penetrations through the roof covering and all joints between the roof covering and vertical surfaces must be flashed (for example: walls, chimneys, plumbing vents).
4. Other methods of installing exterior roof insulation must be approved by the utility in writing prior to beginning the work.

5.3 Insulating Manufactured-Home Roof Cavities

Blowing a closed manufactured-home roof cavity is similar to blowing a closed wall cavity, only the insulation doesn't have to be as dense. Use fiberglass because cellulose too readily absorbs water and is too heavy for use with a manufactured home's lightweight sheeting materials.

There are three common and effective methods for blowing manufactured-home roof cavities.

1. Cutting a square hole in the metal roof and blowing fiberglass through a flexible fill-tube.
2. Disconnecting the metal roof at its edge and blowing fiberglass through a rigid fill-tube.
3. Blowing fiberglass through holes drilled in the ceiling.

5.3.1 Preparing to Blow a Manufactured-Home Roof

Before insulating a ceiling cavity, inspect the ceiling to be sure it can support the weight of more insulation. Reinforce weak areas in the ceiling and seal all penetrations. Take steps to maintain safe clearances between insulation and recessed light fixtures and ceiling fans. See *"Preparation for Attic and Roof-Cavity Insulation"* for more information.

5.3.2 Blowing a Manufactured-Home Roof from the Top

Blowing through the roof top does a good job of filling the critical edge area with insulation, and the patches are easy to install with the right materials. It is important to complete the work during good weather, however, since the roof is vulnerable to rain or snow during installation.

If the roof contains a strongback running the length of the roof, the holes should be centered over the strongback, which is usually near the center of the roof's width. A strongback is a 1-by-4 or a 1-by-6, installed at a right angle to the trusses near their center point, which adds strength to the roof structure.

1. Cut 10-inch square holes at the roof's apex on top of every second truss. Each square hole permits access to two truss cavities.
2. Use a 2-inch or 2-$^{1}/_{2}$-inch diameter fill-tube. Insert the fill-tube and push it forcefully out toward the edge of the cavity.
3. Blow fiberglass insulation into each cavity.
4. Stuff the area under each square hole with a piece of unfaced fiberglass batt so that the finished roof patch will stand a little higher than the surrounding roof.
5. Patch the hole with a 14-inch-square piece of stiff galvanized steel, sealed with roof cement and screwed into the existing metal roof.
6. Cover the first patch with a second patch 18-inch-square piece of foil-faced butyl rubber.

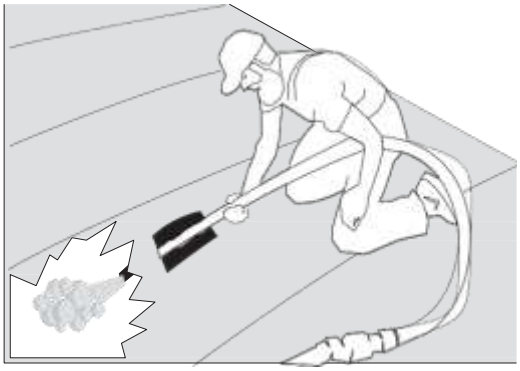

Roof-top insulation: Blowing fiberglass insulation through the roof top achieves good coverage and density on almost any metal roof.

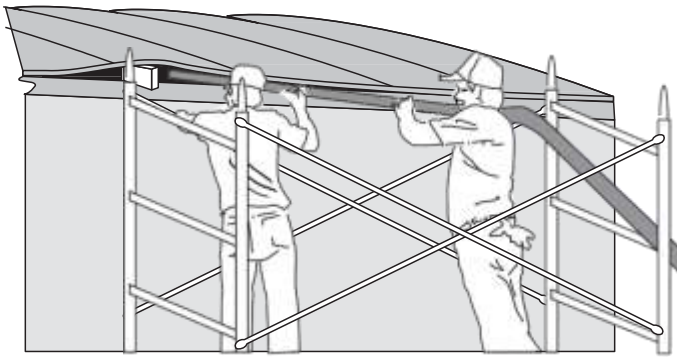

Roof-edge blowing: Use a rigid fill tube to blow insulation through the roof edge. This avoids making holes in the roof itself, though this process requires care in refastening the roof edge.

5.3.3 Blowing a Manufactured-Home Roof from the Edge

Blowing insulation through the roof's edge can be very fast and doesn't require cutting into the roof. However, in order for the installation process to be efficient, the contractor should use proper tools such as scaffolding and a powered stapler to repair the roof. This procedure won't work on roof systems with a central strongback that stops the fill tube from reaching all the way across the roof.

1. Remove the screws from the metal j-rail at the roof edge. Also remove staples or other fasteners, and scrape off putty tape.
2. Pry the metal roof up far enough to insert a 2-inch-diameter, 10- to 14-foot-long rigid fill-tube. Two common choices are steel muffler pipe and aluminum irrigation pipe. Inspect the cavity with a bright light to identify any wires or piping that could be damaged by the fill tube.
3. Blow insulation through the fill-tube into the cavity. Turn off the insulation-material feed and blower on the blowing machine when the tube is a couple feet from the roof edge, in order to avoid blowing insulation out through the opening in the roof edge. Stuff the last foot with unfaced fiberglass batts.
4. Fasten the roof edge back to the wall using galvanized or stainless steel roofing nails, a new metal j-rail, new putty tape, and larger screws. The ideal way to re-fasten the metal roof edge is with air-driven galvanized staples, which is the way most roof edges were originally attached.

The re-installation of the roof edge is the most important part of this procedure. Putty tape must be replaced and installed to the original condition. This usually involves installing a layer of putty tape or a bead of high quality caulk under the metal roof and another between the metal roof edge and the j-rail.

5.3.4 Blowing a Manufactured-Home Roof from Indoors

The advantage to this method is that you are indoors, out of the weather. The disadvantages include being indoors where you can make a mess — or worse, damage something.

Blowing the roof cavity from indoors requires the drilling of straight rows of 3-inch or 4-inch holes and blowing insulation into the roof cavity through a fill tube then patching the ceiling to a pre-paint condition.

Follow this procedure to insulate the ceiling cavity from indoors.

1. Drill a 3-inch or 4-inch hole in an unseen location to discover whether the roof structure contains a strongback that would prevent blowing the roof cavity from a single row of holes.
2. Devise a way to drill a straight row of holes down the center of the ceiling. If a strongback exists, drill two rows of holes at the quarter points of the width of the ceiling.
3. Insert a flexible plastic fill tube into the cavity, and push it as far as possible toward the edge of the roof.
4. Fill the cavity with tightly packed fiberglass insulation.
5. Cap the holes with manufactured plastic caps. Avoid damaging the holes while insulating so the plastic covers fit properly. You can also install a piece of painted wood trim over the line of holes.

Blowing through the ceiling: The contractor pushes the fill-tube into the cavity and out near the edge of the roof. The holes are drilled in a straight line for appearance.

5.3.5 Ramada Roofs

A ramada roof is a free standing (self supporting) covering over a manufactured home. Comply with these requirements when adding insulation under a ramada roof and on top of the manufactured home's original roof.

1. The ramada roof must be weatherproof and joined to the manufactured home (per local code) to create an enclosed attic cavity. This prevents the entry of weather and pests.
2. The attic cavity must meet the ventilation requirements of the site-built specifications.
3. Extend all exhaust-fan ducts, plumbing vent stacks, etc. to the outside and install a termination in accordance with local code requirements.
4. Open the original roof cap of the manufactured home to allow a full fill of insulation inside the attic cavity. Install the insulation above the original roof to provide an installed level of R-38. Don't seal the openings in the original roof.
5. Seal all ceiling penetrations before the insulation is installed.

6 UNDERFLOOR INSULATION

Underfloor insulation reduces heat loss from a home to a crawlspace or unconditioned basement and keeps floors warm. Even though insulating floors has been a common practice for over 20 years, many older houses still have no floor insulation.

Most basements are usually considered part of the conditioned space. Insulation installed between a conditioned basement and the main part of the house rarely saves energy. Consider basements conditioned if they are actively heated, potentially livable, have mechanical equipment, or are not vented.

Careful preparation and installation practices are necessary to install floor insulation in a durable and effective manner. Comply with these requirements when insulating the floor-joist cavities above a crawlspace or unconditioned basement.

6.1 Preparation for Underfloor Insulation

Crawlspaces often suffer from moisture damage, poor indoor air quality, and odors. While floor insulation improves comfort and energy efficiency, without preparation it can worsen moisture problems or create new ones by reducing the drying potential of crawlspaces. Drainage problems and high humidity that contribute to crawlspace dampness must be fixed before floor insulation is installed. When a contractor installs underfloor insulation in a site-built home, these preparatory steps are required.

1. Remove all degradable and absorbent scrap materials from the crawlspace, especially wood and cardboard. These materials may eventually rot and damage the structure. Repair any water leaks and moisture damage prior to performing work.
2. If standing water is found in the crawlspace, drain it before insulating the floor. Repair chronic bulk water problems or plumbing leaks before the floor is insulated.

6.1.1 Dryer Exhaust

Dryer exhaust vents carry moisture from wet clothes to the exterior of the structure. Sealing dryer vents prevents this moisture from entering a crawlspace and causing damage to wood framing or creating indoor air quality concerns. Dryer exhaust ducts must comply with these requirements.

1. Dryer exhaust ducts that pass through crawlspaces must be vented to the outdoors, have a back-draft damper, and terminate in a code-approved vent cap.
2. New dryer ducts must be rigid metal, securely connected with metal clamps and UL-rated foil tape, permanently supported, and sized according to the manufacturer's specifications. To prevent blockage with lint, don't connect new dryer vent ducts with screws. Instead, use a metal clamp to secure dryer duct connections. Blocked dryer vents are a leading cause of house fires.
3. Exhaust systems must comply with local code and manufacturer specifications, not exceed 25 feet, be as straight as practical, and slope downward to allow condensate to drain toward the termination fitting, if possible.

6.1.2 Downdraft Exhaust Fans

Downdraft exhaust fans are becoming common in kitchens. Like all other exhaust fans, downdraft fans must vent to the exterior of the structure in ducts insulated to R-4, so moisture doesn't accumulate in the vent and cause damage.

Downdraft exhaust ducts must exit through the foundation or exterior wall and may have one 90-degree turn. The vent cap must have $^{1}/_{4}$ inch mesh screen to prevent rodents from entering, and there must be at least one backdraft damper in the assembly.

6.1.3 Ground-Moisture Barrier

Moisture in soil evaporates into the air in a crawlspace, which can cause high humidity. Moist air can condense and damage wood framing in the crawlspace. Or the moist air can flow upwards into the home. Polyethylene ground-moisture barriers reduce the amount of moisture that evaporates into the air. Homes with excessively wet soil can benefit from sealing seams with acoustical sealant to make an airtight cover.

Verify that a ground-moisture barrier is present in the crawlspace or install a new ground-moisture barrier before installing underfloor insulation. Comply with these requirements when verifying, installing, or retrofitting a ground-moisture barrier

1. Acceptable materials for a ground-moisture barrier include the following.
   a. 6-mil black polyethylene.
   b. UV-stabilized and opaque polyethylene.
   c. Existing black 4 mil polyethylene may remain if it's in good condition.
2. Overlap seams by 12 inches.
3. Treat unconditioned basements with exposed soil the way you would a vented crawlspace. Cover the exposed soil with a ground moisture barrier.
4. A ground moisture barrier isn't required in basements with no exposed soil.
5. Ground-moisture barriers aren't required for houses built on posts, pilings, or masonry piers and have no perimeter solid skirting that creates a crawlspace.

Ground-moisture barrier: Ground-moisture barriers prevent water vapor from saturating the air in a crawlspace.

6.1.4 Crawlspace Ventilation

Any moisture that enters a crawlspace from any source must be drained or vented to the outdoors. Crawlspaces weatherized with underfloor insulation must be vented by openings in exterior foundation walls or rim joists.

1. The total net free area of foundation vents must not be less than 1 square foot for each 150 square feet of underfloor area as a default standard.
2. Vent openings must be covered with corrosion-resistant wire mesh with openings not more than $^{1}/_{4}$-inch in width or length.
3. Where soil moisture isn't considered excessive, a code official or utility representative may reduce the ratio to 1 square foot of vent for each 1500 square feet of underfloor area. Vent openings must be located close to corners and provide cross ventilation in the crawlspace.

6.1.5 Water Pipes in Crawlspaces

Exposed water pipes may freeze. Un-insulated hot-water or hydronic pipes experience significant heat loss all year. If water or hydronic pipes won't be covered by at least one inch of floor insulation, wrap the pipes according to *"Hydronic and Water-Pipe Insulation"*. Fiberglass batts used in floor insulation must be cut to fit around pipes with no voids or compression.

6.1.6 Indoor Access Doors for Underfloor Areas

Access hatches and doors that connect the inside of the house to an underfloor area are often leaky or uninsulated. To avoid excessive energy waste, insulate and air seal the access hatch as necessary. Insulate any interior crawlspace access door to at least R-25 for horizontal openings and to at least R-11for vertical openings. Comply with these requirements for indoor access doors as part of underfloor insulation.

1. Weatherstrip all inside access doors and hatches. Some accesses may require more than simple weatherstripping. Replace the entire door or hatch if necessary, or add framing around the opening to create a continuous ledge for weatherstripping to connect. Some subfloor types, such as tongue and groove boards, allow air to move past weatherstripping. Seal these gaps with caulk or foam.
2. Use staples and twine to securely fasten the fiberglass batts to access doors to ensure the effectiveness and durability of the insulation. Insulate as much of the door as possible without affecting the door operation. Fiberglass batts must be covered with a vapor-permeable air barrier material when regular access by people occurs.

Pre-made doors or hatch assemblies that meet either of these two descriptions may be installed.

1. Install R-5 or greater rigid insulation between the access cover and a rigid protective material (plywood or other durable rigid material) under the entire insulation area. Insulation must be sealed around the perimeter to the access cover using caulk, adhesive, or spray foam. Attach the rigid protective material mechanically to the access cover to securely hold the insulation in place. Tightly seal the access cover assembly using weatherstripping around the entire perimeter.
2. Foam core doors with a minimum R-5 insulation rating (manufactured for exterior use) used in vertical wall underfloor access door installations are permitted. Gaskets or weatherstripping must minimize air leakage around the entire door perimeter.

6.1.7 Exterior Access Doors for Underfloor Areas

Any outside access must not allow water or pests to enter a crawlspace. Exterior access doors must meet these requirements.

1. The door, its hinges, and associated fasteners must be made from weather-resistant materials.
2. Vertical accesses may be screened if they are used as part of the crawlspace ventilation system.
3. Horizontal basement and crawlspace hatch covers must shed water away from the foundation and crawlspace entrance.
4. Wood in contact with soil or concrete must be moisture- and rot-resistant.
5. Existing covers are acceptable, provided they are in good condition, weather-resistant and vermin-resistant.

6.2 Prescriptive Crawlspace Air Sealing (Optional)

Crawlspace air often contains moisture, odors, or other pollutants. This air can rise into the living space of a home through cracks in the subfloor, degrading indoor air quality and wasting energy.

Fiberglass insulation performs better when contained by a continuous air barrier because the insulation itself doesn't stop air. When air flows through and around the insulation, the insulation's effectiveness drops significantly.

Sealing openings that connect crawlspaces to the inside of the home improves air quality, saves energy and supports the performance of insulation. Comply with the following table when performing air sealing in a crawlspace.

Table 4 - Crawlspace Air Sealing Requirements

Item	Sealing requirements between conditioned space and unconditioned space or the outdoors
Crawlspace hatch/door	Permanently attach weatherstripping to create an effective air seal between the crawlspace hatch door and its frame. Install rigid framing material and weatherstripping if the hatch isn't supported by a frame on all 4 sides.
Chases	Seal with foam, caulk, or rigid moisture-resistant material to the floor or wall. Use fire rated materials at chimneys and flues.
Duct penetrations	Seal with mastic, caulk, or other airtight seal around perimeter of duct boots between the boot and the subfloor.
Plumbing and electrical penetrations	Seal with foam or caulk. Use a rigid, moisture resistant material to span gaps larger than 1".
Other open cavities	Use rigid material to cover openings greater than 1". Seal rigid material to the floor with caulk.
Sill plate/stem wall	Between conditioned space and unconditioned crawl spaces, seal the sill plate to the stem wall connection with foam or caulk. Foam or caulk perimeter of each rim joint.
Rim joists	Foam or caulk perimeter of each rim joist. (Only for rim joists between basements and crawlspaces.)

6.3 Installing Underfloor Insulation

Underfloor insulation is difficult to install in a durable and completely effective manner. Crawlspaces are uncomfortable spaces to work in, floors systems have pipes and other obstructions to work around, and gravity is always working to pull the insulation away from the subfloor. Insulation strategies may consist of faced or unfaced fiberglass batts, blown fiberglass, or spray foam insulation. The following guidelines promote long-lasting energy savings from underfloor insulation. Insulate the floor to the maximum amount practical. Check with local code or utility weatherization programs for minimum insulation requirements.

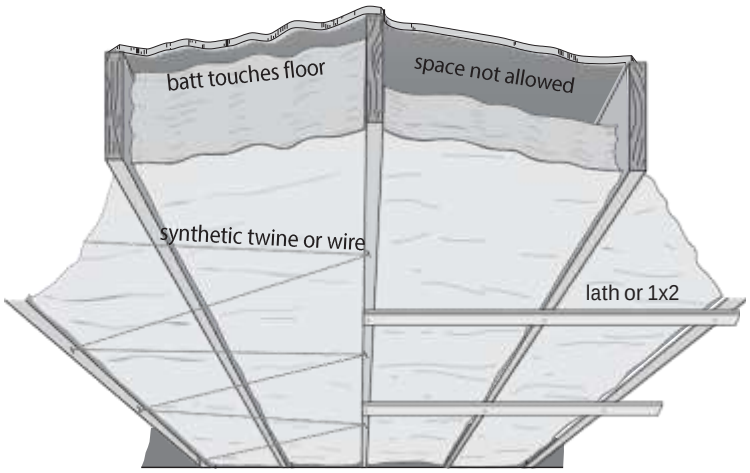

Floor insulating with batts: Install fiberglass batts flush to the subfloor. The batt should fill the whole cavity and be supported from underneath by lath, synthetic twine or wire.

6.3.1 Installing Fiberglass Batt Insulation

The following guidelines are intended to help contractors install batts in a way that maximizes its effectiveness and durability. Comply with these requirements when installing fiberglass batts in floor-joist spaces of the underfloor.

1. Cut batts to fit around water pipes, drain pipes, or other obstructions so no gaps or voids exist.
2. Faced and unfaced batts are both acceptable. If the installed batt has a vapor retarder facing (Kraft paper or foil-Kraft), the facing must be installed against the floor sheathing. Kraft-faced fiberglass batts provide a vapor retarder. Foil-faced fiberglass batts provide a vapor barrier.
3. Support fiberglass batts so that the batts remain in contact with the sub-floor, and remain in place for the life of the home. You can compress the insulation in order to achieve continuous contact with the bottom of the floor.
4. Support batts no more than 3 inches from the ends. Small batt pieces also need support.
5. Use one of the following materials to support floor insulation.
   a. **Wood lath—**Wood lath needs to be a minimum of $^{1}/_{4}$ x 1 inch for spans up to 48 inches. Spans greater than 48 inches must use at a minimum nominal 1x2 lumber.
   b. **Twine—**Twine must be non-stretching polypropylene or polyester.
   c. **Wire—**Wire must be stainless steel, copper or an equivalent material of similar corrosion resistance, with a minimum diameter of 0.040 inch (size 18 AWG).
6. Self-supporting wire hangers aren't acceptable.
7. Fasteners for floor-insulation support materials must meet the following requirements.
   a. Staples must be driven with a power-actuated stapler to achieve at least $^{5}/_{8}$ inch penetration. Hand stapling isn't a durable fastening technique and isn't allowed.
   b. Fasteners for lath, twine or wire may be hot-dipped galvanized nails, screws or corrosion-resistant staples that are at least 18-gauge and long enough to penetrate wood at least $^{5}/_{8}$ inch.

Table 5 - Spacing Requirements for Underfloor Fiberglass Batt Supports

Spans	Maximum Spacing
24 inches or less	18 inches apart
48 inches	12 inches apart
60 inches	8 inches apart
72 inches	6 inches apart

Fasten support systems to the underside of floor joists. Joists may be skipped, but the maximum span of skipped joists cannot exceed 48 inches. The spacing must be 12 inches or less.

6.3.2 Installing Blown Insulation

Insulation, when blown into floor cavities, fits around obstructions with no gaps. Although blowing insulation into floor joists can be difficult in cramped locations, blowing insulation provides better thermal resistance and than traditional batts. Comply with these requirements when blowing insulation into the floor-joist spaces of a site-built home.

1. Blow only fiberglass or rock wool loose-fill insulation in a floor cavity.
2. Use an insulation restrainer, like one of these below, to hold the blown insulation in the floor cavity.
   a. Webbing or netting designed for restraining blown insulation.
   b. A vapor-permeable polyolefin house-wrap material.
   c. Foam board insulation, especially in cold damp locations to prevent moisture condensation in the fibrous insulation.

Blown Fibrous Insulation: The two most common types of blown fibrous insulation are fiberglass and cellulose. Cellulose blows at a higher density in attics, which makes it better for resisting convection currents within the blown insulation compared to fiberglass. Cellulose more readily absorbs water vapor and liquid water, which makes it less beneficial in humid environments compared to fiberglass.

3. Blow insulation through V-shaped holes in the restrainer.
4. Use wood strips to support the flexible or semi-flexible retainer material unless that material with its fasteners can support the floor insulation permanently without sagging.
5. Use a fill tube for installing the blown insulation. Insulation must travel no more than 12 inches from the end of the fill tube.
6. Seal all penetrations in the insulation restrainer with a tape.

Blown fiberglass floor insulation: Blowing loose fill insulation is a best practice when there are a lot of obstacles or the floor is framed with webbed trusses.

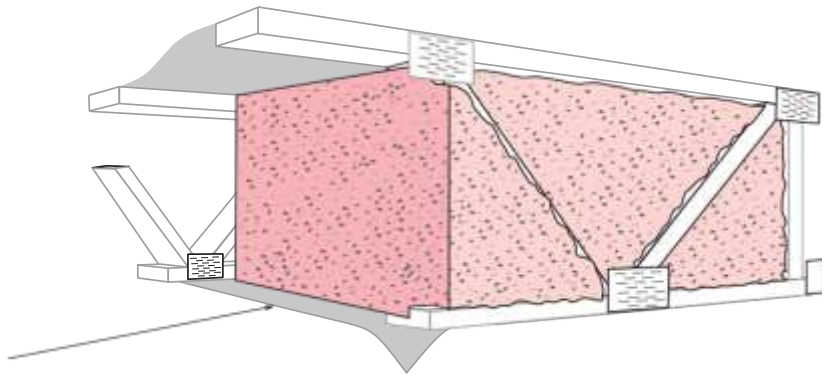

6.3.3 Installing Spray Foam Floor Insulation

In addition to insulating value, spray foam and rigid foam insulation provide superior air-sealing properties in floors. Floor systems often leak through small cracks. To seal these numerous air leaks with caulk or single-part foam is very difficult. A continuous layer of spray foam seals all the leaks.

Foam insulations must meet thermal and ignition barrier requirements for “foam plastics,” as detailed by the local building code and enforced by local building officials.

Spray foam insulation typically needs no support. When installing fiberglass batts or blown fiberglass underneath foam, as additional floor insulation or as an ignition barrier, support the fiberglass insulation. See *"Installing Fiberglass Batt Insulation"* or *"Installing Blown Insulation"* for more information.

6.3.4 Walls Between Conditioned Space and Underfloor Spaces

In order to complete the thermal envelope, seal and insulate walls that separate conditioned and unconditioned spaces in the underfloor area, such as between ventilated crawlspaces and conditioned basements. Comply with the following requirements when installing underfloor insulation.

1. If the floor joist cavities are open between the conditioned and unconditioned spaces, block with a rigid material and seal with caulk or foam. Air seal the walls including any cavities between the floor joists.
2. Insulate the walls to a minimum of R-11 for a 2x4 cavity, and R-21 for a 2x6 cavity.
3. When no wall exists, construct an insulated and airtight wall.

6.3.5 Rim Joist Insulation

Rim joists represent a major flaw in the thermal envelope of a home. Typically, rim joists separate the conditioned basement from the outdoors with less than 2 inches of wood. Rim joists often have significant air leaks too. Follow these best practices when installing rim-joist insulation in conditioned basements.

1. Install rim joist insulation in conditioned basements only.
2. The best practice is to seal the rim joist and insulate it with an air-impermeable insulation, to avoid condensation on the rim joist. Use one of these two methods.
   a) Spray high-density polyurethane foam.
   b) Install foam board sealed with one-part polyurethane foam.
3. If foam isn't used, seal each joist bay for air leakage prior to installing insulation. Use at least R-13 or greater fiberglass batts, cut to fit, and securely fastened.
4. Fibrous insulation exposed to the living space should be covered with a vapor-permeable air barrier where people may enter.
5. Seal the sill plate to the foundation wall using an appropriate caulk product.

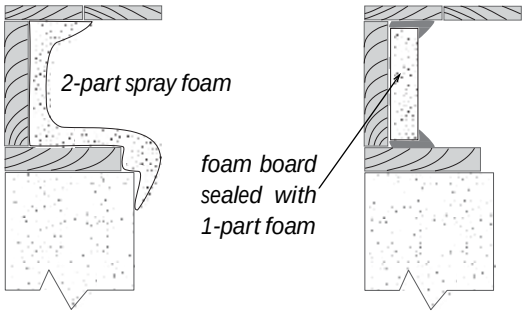

Foam-insulated rim joists: 4 inches of EPS foam is sealed around its perimeter with one-part foam.

Foam-insulated rim joists: Installing foam insulation is the best way to insulate and air seal the rim joist6.4 Protecting Underfloor Insulation

Protect underfloor insulation for unskirted crawlspaces and cantilevered floors with an air barrier. If unprotected, animals and weather can damage the insulation.

7 Manufactured Homes: Underfloor Insulation

Manufactured homes typically have significant opportunities for energy savings and comfort improvements by installing underfloor insulation. Manufactured homes are different from site-built homes in that the floor system and most mechanical systems are encased from below with a rigid or flexible covering called a rodent barrier. During construction, workers install 1 to 3 inches of insulation between the rodent barrier and the bottom of the floor joists, leaving the floor cavities empty of insulation. Often, the rodent barrier is damaged and insulation has fallen away. Repairing the rodent barrier and adding retrofit insulation is a high priority for manufactured-home weatherization.

Work with homeowners to achieve the highest R-value that their budget will allow. Check with local code or utility weatherization programs for minimum insulation levels. Comply with the requirements in this section when insulating the underfloor area of manufactured homes.

7.1 Duct Insulation, Duct Sealing and Air Sealing

All accessible HVAC ductwork, including plenums, should be repaired, sealed and properly supported, according to *"Manufactured Homes: HVAC Duct Sealing and Insulation"* before underfloor insulation is installed.

7.2 Preparation for Underfloor Insulation

Two methods of insulating manufactured-home floors are common: blown underfloor insulation and fiberglass batts. When installing blown underfloor insulation, fiberglass is preferred for its moisture resistant properties. Before installing either blown or fiberglass batt underfloor insulation, take these steps to prepare the home.

1. Remove debris and moisture-susceptible material from the crawlspace.
2. Repair and seal any leaks or openings in the HVAC ducts and plenums before installing underfloor insulation.
3. Install a ground cover in the crawlspace.
4. If the floor contains a non-ducted return system, seal the opening to the crawlspace and provide return air, either by installing new return ducts or by installing a vent between the furnace-closet door and the main area of the home.
5. Extend all water drains to the outside the crawlspace, including condensate drains from air conditioning equipment.

6. Extend all exhaust ducts, such as those for kitchen ranges and dryers, to the outside of the crawlspace. Seal the ducts and their termination fittings to prevent exhausted air from returning to the crawlspace or to the manufactured home when skirting exists.
7. Seal all plumbing penetrations through the rodent barrier or floor before installing underfloor insulation.
8. Water pipes that aren't contained within the thermal envelope by underfloor insulation must be insulated and may be evaluated for heating cable as described in *"Water Pipes in Crawlspaces"*

9. If the home has skirting, install a ground-cover moisture barrier before insulating the underfloor as detailed in *"Ground-Moisture Barrier"* and ventilate according to *"Crawlspace Ventilation"*.
10. Identify any plumbing lines, and avoid installing insulation between them and the living space if freezing could be an issue. Install building-paper and insulation under the pipes, if necessary, to include the pipes in the heated envelope of the home.

7.3 Blown Underfloor Insulation

Filling the cavity between the rodent barrier and the subfloor with blown insulation creates a complete and void-free blanket of insulation, if the rodent barrier is intact and in good condition.

Repair large holes in the rodent barrier to prevent insulation from falling into the crawlspace from the floor cavity. Stitch-staple repair materials to the rodent barrier, adhere patches with adhesive, or otherwise permanently affix the patches. All repair materials must be vapor-permeable. Blow fiberglass material using a fill tube through V-shaped cuts in the rodent barrier. Contractors must comply with these requirements when selecting materials for blown floor insulation.

1. Blow only fiberglass insulation in the floor cavity of a manufactured home.
2. Materials used to patch the rodent barrier must be vapor-permeable, durable and capable of supporting the insulation. Repair large holes in the rodent barrier to prevent insulation from falling into the crawlspace from the floor cavity. Stitch-staple repair materials to the rodent barrier, adhere patches with adhesive, or otherwise permanently affix the patches.
3. Use expanding foam or other sealants to seal accessible floor penetrations.

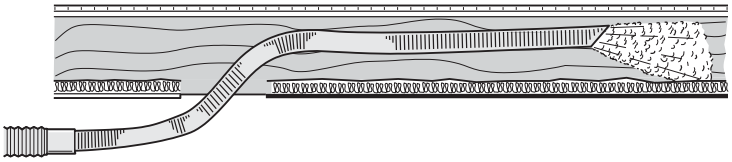

Blowing through rodent barriers: A flexible fill-tube, which is significantly stiffer than the blower hose, blows fiberglass insulation through a hole in the belly from underneath the home.

7.4 Fiberglass Batt Underfloor Insulation

In homes where the rodent barrier is damaged or missing over significant sections, install fiberglass batts in the floor joists. The insulation should be supported by lath, twine, or insulation supports. Batts installed in the floor joists must meet requirements in *"Installing Underfloor Insulation"*.

Comply with these insulation requirements when adding fiberglass batts to the floor-joist cavity of a manufactured home.

1. Install fiberglass batts to achieve a minimum of R-22 or the maximum R-value achievable with no air space between the insulation and the subfloor. Contractors may compress the batts in order to maintain continuous contact with the bottom of the floor.
2. Protect insulation with a vapor-permeable covering or perimeter skirting. Skirting must be as close to the ground as practical and prevent the entry of animals.

8 Wall Insulation: Site-Built Homes

Uninsulated walls waste energy and cause comfort problems in homes. Occupants often notice a big improvement in their comfort after a wall insulation retrofit. Besides reducing heat transmission, wall insulation reduces air leakage, dampens outdoor noise, and reduces the potential for condensation on interior wall surfaces. Contractors must comply with these insulation requirements when adding insulation to the exterior walls of a home.

8.1 Insulating Unfinished Walls

Some homes have unfinished walls, such as frame walls, concrete walls, or masonry walls, with no insulation. Contractors insulate exposed frame walls that border the home's conditioned space in garages, attics, or crawlspaces. Concrete and masonry walls may be insulated as a part of wall insulation as well. Comply with the following requirements when insulating unfinished walls.

1. Insulate walls to a minimum of R-11 for masonry or for nominal 4 inch walls and to a minimum of R-21 for nominal 6 inch walls.
2. Don't insulate below-grade masonry or concrete walls with fiberglass batts. Water moves through these materials from the soil by capillary action and dampen the fiberglass, reducing its thermal resistance.

8.2 Installing Blown Insulation

Filling finished walls with dense-pack insulation reduces heat loss in three ways: it slows heat transmittance through the wall, it reduces air leakage, and it stops air convection in wall cavities. When possible, remove siding and drill through the sheathing. If siding can't be removed, either drills through the siding or through the interior wall. Patch holes in siding so that no water can intrude into the wall.

Follow these steps to insulate finished frame walls.

1. Remove one or two courses of siding around the house.
2. Drill 2-to-3-inch diameter holes to access stud cavity.

Tube-filling walls: Tube filling can happen from inside or outside the home. It is the preferred wall insulation method because it is a reliable way to achieve a uniform coverage and density of insulation.

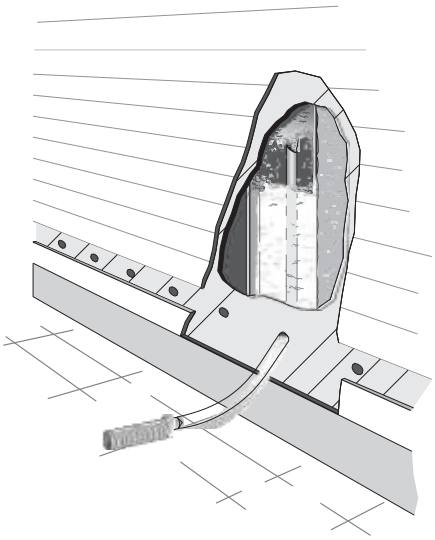

3. Probe all wall cavities through holes, before you insulate them with the fill tube, to identify fire blocking, diagonal bracing, and other obstacles.
4. To install dense-pack wall insulation, use a blower equipped with separate controls for air and material feed. Mark the fill tube in one-foot intervals to help you verify when the tube reaches the top of the wall cavity
5. Insulate the wall to the highest practical R-value. Fill all cavities in all exterior walls, including small cavities above, below and on the sides of windows and doors.
6. Don't insulate wall cavities containing supply plumbing, since freezing may occur. Repair any damage to interior walls resulting from wall insulation.
7. To prevent settling, blow cellulose insulation to at least 3.5 pounds per cubic foot (pcf) density. Use fiberglass insulation designed for dense-pack installation. Fiberglass dense-pack should be at least 2.2 pcf.
8. Start with several full-height, unobstructed wall cavities so you can measure the insulation density and calibrate the blower. An 8-foot cavity (2-by-4 on 16-inch centers) should consume a minimum of 10 pounds of cellulose or 6 pounds of fiberglass.
9. Insert the hose all the way to the top of the cavity. Start the machine, and back the hose out slowly as the cavity fills. Next, fill the bottom of the cavity starting near the bottom plate and working back toward the hole.
10. Block wall-mounted heaters to prevent contact with insulation. If you can't install blocking, don't fill the cavity with insulation.
11. Seal all fill holes with a non-shrinking, unvented plug.
    a. Holes that will be covered by siding must be plugged and must be completely covered by the siding. If a plug is partially exposed, for example by falling between two pieces of shake siding, the plug must be covered by a properly-lapped building paper, such as 15-pound asphalt felt, polyolefin house wrap, or stucco building paper.
    b. Holes drilled through the siding must be plugged, sealed, weatherproof, and ready to paint. If the surface of the plug is below the surface of the siding, the hole must be filled with non-shrinking filler.

8.3 Exterior Continuous Wall Insulation

Continuous rigid insulation on the exterior of a wall reduces thermal bridging and increases the durability of the wall by reducing temperature changes experienced by the wood framing. Comply with these requirements when installing exterior insulation.

1. When applying rigid insulation to the exterior stud surfaces of an open cavity frame wall, fit the insulation together tightly to minimize air leakage.
2. During the exterior retrofit, install a code-approved water-resistive barrier using building paper. Incorporate the window flashing into the water-resistive barrier to provide a continuous drainage plane.
3. Install siding according to the insulation or siding manufacturer instructions or as approved by the utility.

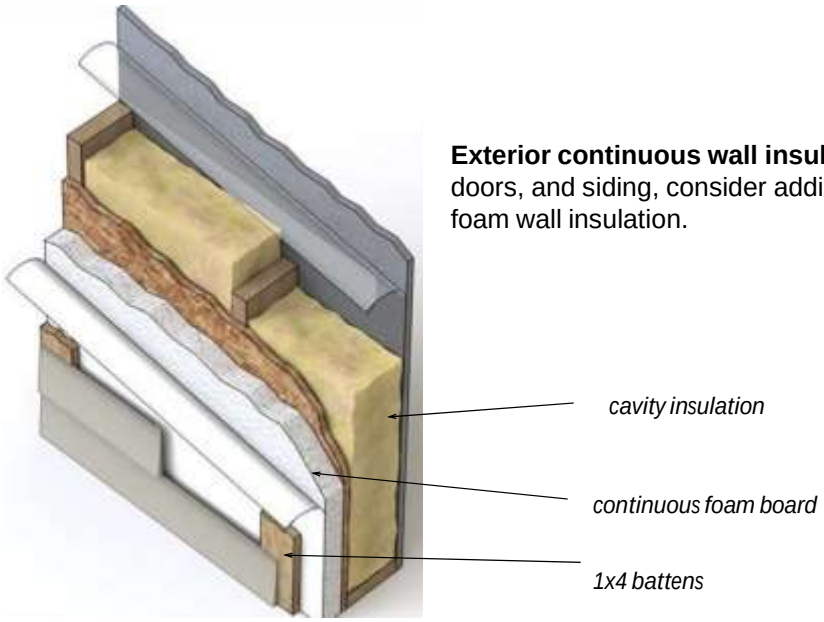

Exterior continuous wall insulation: When replacing windows, doors, and siding, consider adding an inch or two of continuous foam wall insulation.

9 HVAC Duct Sealing and Insulation

HVAC ducts located in unconditioned spaces can lose energy to their surroundings through both air leaks or from heat transmission through the walls of the duct. This heat loss wastes energy and can cause comfort problems when not enough heated air reaches distant rooms. Small leaks, spread over the whole duct, result in significant energy losses.

9.1 Duct Sealing

Contractors should comply with the requirements of either *Performance Tested Comfort Systems (PTCS)* or the BPA Prescriptive Duct Sealing Specifications when sealing ducts. Re-install all floor insulation if it was removed in the course of doing duct sealing.

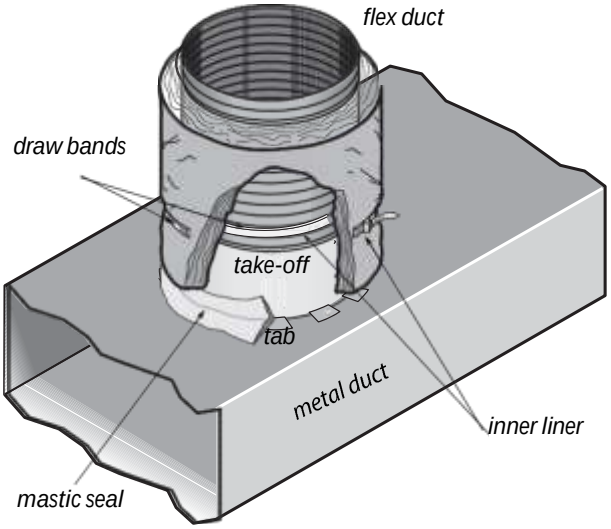

Flex duct joins metal duct: This duct joint includes the take-off sealed to the metal duct and the flex duct connected to the take-off.

9.2 Duct Insulation

Contractors should seal ducts according to PTCS requirements before insulating the ducts. Contractors must comply with these requirements when installing duct insulation.

1. Properly support ducts before insulating.
2. Ducts must be completely insulated without visible voids or gaps in the insulation covering the duct.
3. Duct insulation must be protected from condensation by a vapor retarder.
4. Replace uninsulated flex-ducts with R-11 flex-ducts.
5. Insulate sheet metal ducts to a minimum R-11. Check with local code or utility weatherization programs for minimum insulation requirements.
6. Insulate all ducts located outside of the conditioned space, including plenums and boots. Use mechanical fasteners, such as permanent plastic straps, nylon twine, or stick pins to support all duct insulation.
7. Use tape (UL 181 B) to seal the seams in the insulation's facing to provide a continuous air barrier and vapor barrier.

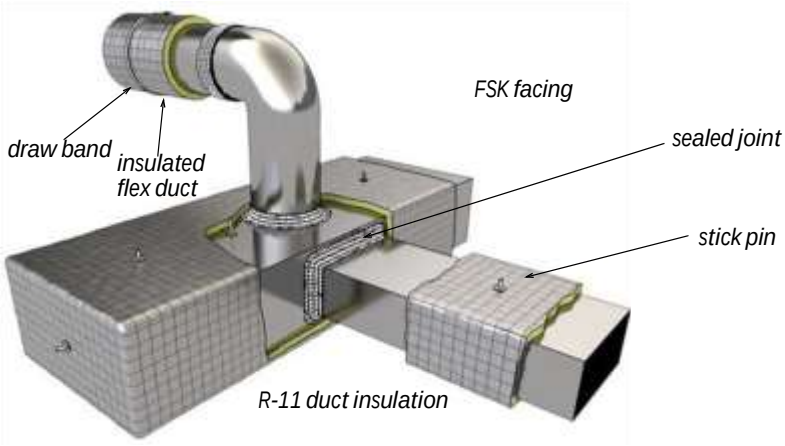

Duct insulation: Insulate supply and return ducts, located in unheated areas, to a minimum of R-11.

10 Manufactured Homes: HVAC Duct Sealing and Insulation

Ducts in manufactured homes are typically contained inside the rodent barrier, making them a challenge to insulate. Fortunately, most duct sealing can be achieved from accessible locations without having to cut the rodent barrier open. Contractors must comply with these duct-sealing and duct insulation requirements.

10.1 Duct Sealing

Contractors should comply with the requirements of *Performance Tested Comfort Systems (PTCS)* or the BPA Prescriptive Duct Sealing Specifications when sealing ducts. Re-install all floor insulation if it was removed in the course of doing duct sealing, then repair or replace the rodent barrier.

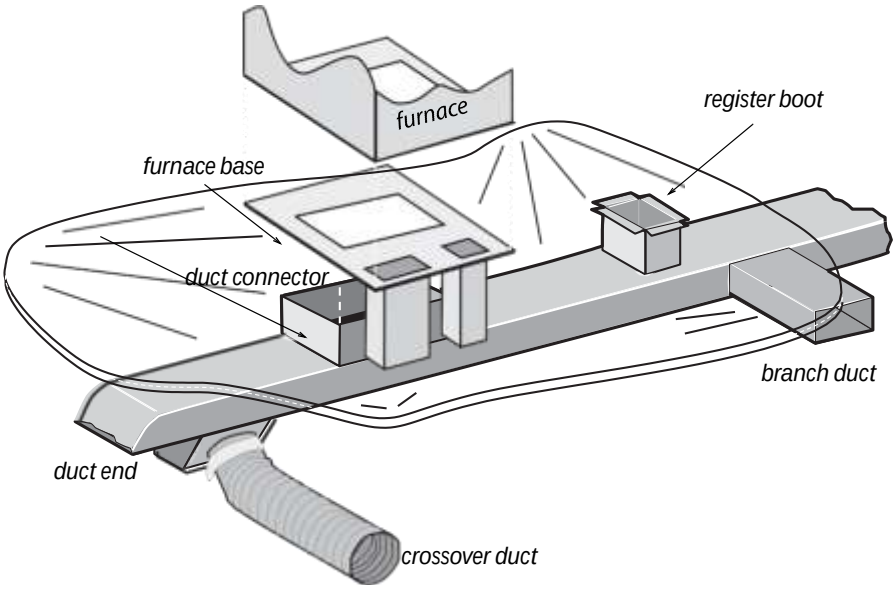

Mobile home ducts: Mobile home ducts leak at their ends and joints — especially at the joints beneath the furnace. The furnace base attaches the furnace to the duct connector. Leaks occur where the duct connector meets the main duct and where it meets the furnace. Branch ducts are rare, but easy to find, because their supply register isn't in line with the others. Crossover ducts are found only in double-wide and triple-wide homes.

10.2 Duct Insulation

1. Where ducts are located outside of the rodent barrier, insulate ducts in compliance with *"HVAC Duct Sealing and Insulation" on page 49*. This is typically limited to the crossover duct.
2. If the rodent barrier has been removed and batt insulation has been installed in the floor, wrap all exposed HVAC ducts, boots and plenums, except flexible ducts, with R-11 insulation. Check with local code or utility weatherization programs for minimum insulation requirements.
3. Support crossover ducts above the ground and protect insulation from contact with the ground. If ground contact is unavoidable, install a minimum R-4 rigid foam insulation between the duct and the ground.

11 Hydronic and Water-Pipe Insulation

Water pipes installed in unconditioned areas can freeze. Contractors must insulate exposed water pipes in attics and crawlspaces when installing attic insulation or underfloor insulation to reduce heat loss and protect against freezing.

11.1 Materials Requirements

Choose water pipe insulation based on the use of the pipe. Hydronic pipes used for heating and cooling require higher R-values to maintain comfortable indoor temperatures, and that insulation must not be compromised by the higher temperatures maintained in hydronic pipes.

Determine the R-value needed using these guidelines.

Table 6 - Required R-Values of Pipe Insulation

Pipe	Required R-Value
Hydronic heating pipe – One inch or less	3.6
Hydronic heating pipe – Greater than one inch	5.4
Domestic water pipes	3.0

1. Pipe insulation must meet the following requirements.
   a. Pipe insulation materials must be composed of mineral fiber, plastic foam, or other suitable materials designed and manufactured for insulating pipes.
   b. Domestic hot-water pipe-insulation must be capable of withstanding continuous operating temperatures no less than 180 degrees Fahrenheit.
   c. Hydronic pipe insulation must be capable of continuous operation at 250 degrees Fahrenheit.
   d. The insulation material, any jackets or facings, and adhesive, if used, must be tested as a composite product. It must have a flame-spread rating of 25 or less, and a smoke-developed value of 50 or less when tested in accordance with ASTM E-84.
2. Pre-formed insulation must be properly sized.
   a. The inside diameter of the pre-formed insulation must match the outside diameter of the water pipes.
   b. If the diameter of fittings at connections and corners is larger than the piping, insulate these fittings with insulation that matches their outside diameter or with properly secured wrap insulation.

11.2 Installation Requirements

Comply with these requirements when insulating hydronic pipes and domestic hot water pipes.

1. Verify that the piping is free from water leaks and properly secured to support the weight of the piping and insulation before installing the insulation.
2. Secure the pipe insulation every 12 inches, and within 3 inches of the ends with twine, corrosion

resistant wire, or plastic compression ties.

3. Tape isn't a durable material for securing pipe insulation and must not be used for this purpose. Tape can be used to create a continuous air and vapor barrier.
4. Pipe insulation must have a minimum finished thickness of 1 inch. When water pipes run next to a beam or joist and the insulation cannot wrap all the way around the pipe, secure the insulation to the beam at a minimum of every 12 inches.
5. Miter the corners of preformed insulation for a tight fit.
6. Cut and fold the insulation to completely cover all sections of the system without overly compressing the insulation to less than 1 inch thickness or allowing gaps to occur in the insulation.
7. Insulate all piping, joints, elbows, and valve bodies, except those sections of the system that are obstructed by existing wood framing members or other components.
8. Seal hydronic heating pipe insulation at all slits and joints with a tape manufactured for this purpose.
9. If insulation is installed on piping exposed to the weather, the insulation must be moisture resistant, and protected from ultraviolet light and extremes in temperature. A jacket or facing can be installed to protect the insulation from these conditions. Follow the manufacturer's recommendation for outdoor installations.
10. The operating portion of valves must be free of insulation and unobstructed.

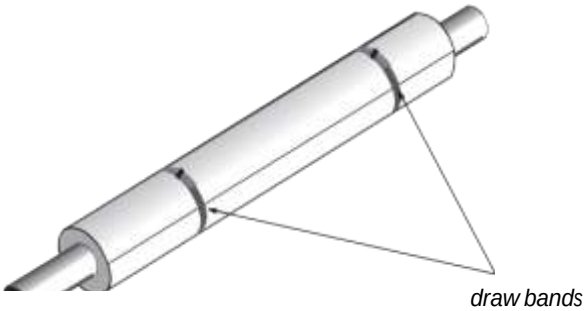

Pipe insulation: Draw bands clamp foam pipe insulation to a hot water pipe.

11.3 Heating Cable Requirements

Where crawlspaces below insulated underfloors may experience freezing temperatures, contractors may install self-regulating heating cable on exposed supply water pipes before insulating the pipes.

1. Self regulating heating cable must be tested for durability and labeled UL 7468 and ASTM 2633.
2. The heating cable must conform to IEC 216-1 Part 1.
3. Insulate the pipes **after** installing the heating cable.

12 Prime Window, Sliding Glass Door, and French Door Replacements

Old, leaky windows are a common comfort issue with occupants, and windows can be a durability concern with the home. Single-pane windows and aluminum-framed windows don't offer much resistance to heat loss in the winter and can cause discomfort for occupants. Windows without low-e glazing allow solar energy to overheat the house in summer.

Windows are often in disrepair due to years of operation and exposure to the elements. In some cases, windows create drafts because they don't close completely. In extreme cases, windows allow rainwater to drain into the wall and compromise the structure.

Check with your local utility for U-factor requirements for replacement windows.

12.1 General Window Requirements

Comply with these general requirements on all window and patio door replacements. Window requirements also apply to patio doors unless otherwise stated.

1. Replacement windows must be certified and labeled for U-factor in accordance with the simulation, testing, and certification procedures of the National Fenestration Rating Council Incorporated (NFRC).
2. Caulk and prime all exterior wood, including frame, sash, trim, stops and sills on all sides and ends.
3. Support the bottom rail of a patio door within ½ inch of exterior edge of the frame. Any wood that touches the ground or concrete must be pressure-treated.
4. Incorporate the replacement window and window opening into the home's water-resistive barrier using proper flashing techniques for each specific window type.
5. Hardware and fasteners must be aluminum, stainless steel, or another noncorrosive material.
6. Seal the structural frame to the window, and seal surrounding gaps and cracks.
   a. Frame: Install caulk or low-expansion foam between window frame and rough opening. Install backer rod or non-expanding foam and caulk where gaps are greater than $^3/_8$ inch.
   b. Exposed framing components: Caulk at exposed wood-to-wood framing cracks; remove sash weights, if applicable, and seal and insulate weight channels.
7. Cover gaps of over $^3/_8$ inch between the exterior siding and the window with solid trim material. Fill all exterior or interior voids over $^3/_8$ inch in width or depth with window manufacturer-approved materials, such as non-expanding foam, backer rod, or similar product prior to caulking, if caulking will be applied.
8. Verify that windows operate smoothly and safely.

12.2 Window Installation Requirements

Comply with these requirements when replacing windows.

Window-frame types: It's important to order the right frame type for the method of window installation you plan to use.

12.2.1 Replacing Nailing-Fin Windows

Windows with nailing fins can be installed in the rough opening after the existing window frame and exterior trim are removed. Nailing fins allow the window to be integrated into the water-resistive barrier, protecting the home from water damage. Fasten the nailing fins directly to the house's sheathing or framing, but support the window's weight on the sill with or without shims before fastening the window to the building.

Windows are exposed to wind and rain. Install replacement windows so water that penetrates the siding or trim drains to the outside. With proper flashing, the fins and flashing create a drainage system that directs water to the outside rather than relying exclusively on caulked siding to prevent rain water from penetrating the building.

Water-Resistive Barrier (WRB): Designers and builders assume that some rain water penetrates the siding. The WRB is the building's last defense against water, which deteriorates building materials over time. House wrap and asphalt felt are the most common WRBs. Window replacements that expose the home's WRB must incorporate the WRB in the window installation. Install a sill pan below the window and flashing on the side fins. Use flashing to connect the window opening to the WRB so water that penetrates the siding, trim, or window exits the building by way of the WRB.

Follow these steps to install a nailing-fin window securely in the rough opening.

1. At the sill, insert the flashing underneath the existing siding and on top of existing building paper. The bottom nailing fin of the window will cover this flashing.
2. Install the window by sliding the top fin under the building paper. Side and bottom fins should rest on top of the building paper. Use flat shims to provide a level surface and support under the vertical structural members of the new window frame. Don't allow the fins to support the window's weight.
3. Use fasteners with heads wide enough in diameter to span the holes or slots in the window fin. Avoid over-driving the fasteners or otherwise deforming the window fin.
4. Flash the window around its perimeter with 15-pound felt, house wrap, or a peel-and-stick membrane.
   a) First, flash the side fins of the window, overlapping the sill flashing;
   b) Then, flash the top fin of the window, overlapping the side flashing.
5. Windows that are exposed to wind-driven rain or without overhangs above them should have a rigid head flashing to prevent rainwater from draining onto the window.

a) If the tops of the windows are already protected by an overhanging metal head flashing, tuck the new flashing behind this head flashing.

b) If the tops of exposed windows aren't protected by head flashing, insert new metal head flashing behind the existing siding and building paper at the top of the window and over the head trim piece. The head flashing should extend beyond the sides of the window enough to divert water away from vertical joints bordering the window.

c) Tuck the head flashing up behind the exterior siding at least 1 inch. Metal head flashing must have downward bending lip of at least $^{1}/_{4}$ inch on the front and ends.

6. Thoroughly caulk all filler and trim pieces surrounding the replacement window.

Flashing nail-fin windows: Place the window on and over the sill flashing. The side and top flashing cover the fastening fin. The two methods shown here are: using a flexible membrane (right) and using a bowtie-shaped flashing to underlay the corners when using a standard membrane

12.2.2 Block-Frame or Finless Windows

Install block-frame (finless) windows when the existing window frame can't be removed or into a masonry window opening. Block-frame windows rely on caulk to create a weatherproof seal around the perimeter. Take care when installing caulk so that it is durable and effective for as long as possible. Comply with the following requirements when installing block-frame or finless windows.

1. If window-weight cavities are accessible, remove the weights, fill the cavities with insulation, and seal the cavities.

2. Support block-frame or finless windows under their main vertical supports with shims that level the window.

   a. Use flat shims if the sill surface is flat.

   b. Use tapered shims or a sill angle if the sill surface is sloping.

3. Windows without fins must be secured to the rough opening within 4 inches of each side corner and a minimum 12 inches on center along the remainder of the sides of the frame with one of these fastening methods.

a. Screws fastened through the window frame. Use screws that are designed for fastening block-frame windows.

b. Jamb clips or plates that are fastened first to the window and then to the opening in separate steps.

4. Protect the existing sill with a metal or plastic sill pan or rigid sill flashing if necessary for drainage and to protect the existing sill that protrudes from the exterior wall. Or, install a new sill as part of the window replacement.

5. Block-frame or finless windows may require a sufficiently wide gap between the existing window frame or masonry opening to allow for the following.

   a. Leveling the window.

   b. Insulating the gap with foam.

   c. Allowing for slightly out of square opening.

6. Fill any gaps over $^{3}/_{8}$ inch that are between the exterior siding and the block-frame window. Install backer rod in all exterior or interior voids over $^{3}/_{8}$ inch in depth or width before caulking.

7. If possible, flash block-frame windows between the opening and the replacement-window frame and extend the flashing out far enough to slip under or into the siding.

   a. Tuck the flashing up behind the exterior siding at least 1 inch.

   b. Sill and head flashing should have a downward bending lip of at least $^{1}/_{4}$ inch on the front that sheds water away from the building.

8. Caulk around the perimeter of the window to the existing frame to prevent water intrusion.

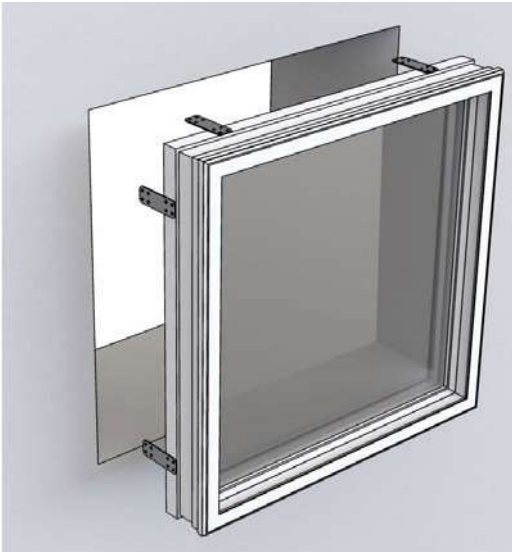

Block frame window installation: Block-frame windows don't have a fin. Installers use plates or screws to fasten the window to its opening.

12.2.3 Flush-Fin Window Replacement

Replace windows in stucco walls using windows with flush fins, also called stucco fins, which have no nail holes. Flush-frame windows are replacement windows that fasten to the window opening and mount directly over the flat siding surrounding the window opening. Flush-fin windows work well for any window opening with a flat finished surface surrounding the window opening. This flush-fin window-replacement technique is similar to block-frame window installation.

1. If window-weight cavities are present and accessible, remove the weights, fill the cavities with insulation, and seal the cavities.
2. Support the replacement window on the existing sill with one of the following materials.
   a. A flat or tapered continuous wood support.
   b. Flat shims under the window's main vertical supports.
   c. Tapered shims under the window's main vertical supports if the sill is sloping.
3. Apply a sealant that remains flexible to the back of the flush fin of the replacement window in order to seal it to the surface of the exterior wall. Leave a gap in the caulking at the bottom fin for one inch on each side of the window's weep holes to allow water to drain.
4. Windows must be secured to the rough opening within 4 inches of each side corner and a minimum 12 inches on center along the remainder of the frame with one of these fastening methods.
   a. Screws fastened through the window frame. Use screws that are designed for fastening block-frame windows.
   b. Jamb clips or plates that are fastened first to the window and then to the opening in separate steps.

12.3 Safety Glass and Emergency Egress

All windows must meet the following safety glazing and egress requirements. Use safety glazing in locations where the risk of breakage is high. Egress windows are windows with an opening sash large enough for people to use as a fire escape.

Safety glazing requirements apply to replacement windows, replacement patio doors, multi-glazing inserts, and storm windows. Each pane of glass requiring safety glazing must bear the manufacturer's permanent safety glazing label. This label of identification is etched or ceramic-fired on the glazing and clearly visible in one of the corners of the lite.

12.3.1 Hazardous Locations Requiring Safety Glazing

Comply with state and local code for required safety-glazing locations. Common locations for safety glazing include the following.

1. Glazing in entry doors.
2. Glazing in patio doors and French doors.

3. Glazing in a fixed or operable panel that meets all of the following conditions:
   a. The exposed area of an individual pane is greater than 9 square feet.
   b. The bottom edge is less than 18 inches above the floor.
   c. The top edge is greater than 36 inches above the floor.
   d. One or more walking surfaces are within 36 inches horizontally of the glazing.
4. Glazing in a fixed or operable panel adjacent to a door where the nearest vertical edge of the window is within a 24-inch arc of the door in a closed position and whose bottom edge is less than 60 inches above the floor or walking surface.
5. Glazing in hot tubs, whirlpools, saunas, steam rooms, bathtubs and showers, if the bottom edge of the glazing is less than 60 inches above the drain inlet.

12.3.2 Emergency Egress Openings

Where an existing window meets code-required egress requirements, the replacement window must also meet those egress requirements. When windows in bedrooms are replaced, contractors should recommend installing egress windows.

13 Prescriptive Air Sealing

This manual includes steps for both prescriptive and whole-house air sealing. Prescriptive air sealing is a series of required steps that may accompany attic or floor insulation measures. Prescriptive air sealing doesn't require a blower door test. In contrast, whole-house air sealing includes a blower door test to obtain a measurement of building tightness before and after air sealing.

Prescriptive air sealing is a list of air-sealing instructions and locations that may compliment attic insulation or underfloor insulation.

- See *"Attic Air Sealing Requirements"* for air-sealing requirements relating to attic and roof insulation.
- See *"Crawlspace Air Sealing Requirements"* for air-sealing requirements relating to underfloor insulation.

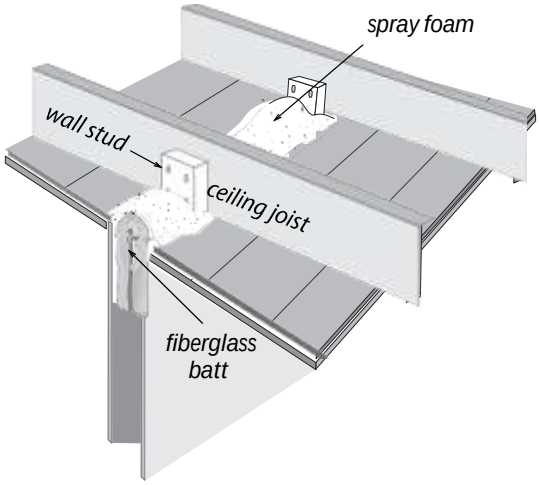

Balloon Framed Walls: A plug of unfaced fiberglass insulation covered by a 1-inch layer of 2-part foam seals balloon wall cavities.

14 Whole-House Air Sealing

Indoor and outdoor air is exchanged through many small cracks and holes all around a home. Warm indoor air also carries moisture, which can condense on wood framing as that air cools in building cavities or unconditioned spaces. Air that leaks out of a home is replaced by cold air, which is uncomfortable for occupants and expensive to heat. Most homes have common leakage locations. Contractors use blower doors to identify the most serious leaks, to verify that they have been effectively sealed, and to estimate the home's total air leakage. Comply with the following requirements when providing whole-house air sealing.

1. Air leakage testing must be performed by a certified technician. Approved certifications include PTCS, BPI, HERS, and Weatherization Assistance Program trainings.
2. The preliminary blower door test must occur immediately prior to the installation of whole-house air sealing. The post-installation blower door test must occur immediately following the installation of whole-house air sealing measures. *See "Blower Door Air-Leakage Measurement".*
3. Seal all accessible and applicable items on the checklists in *"Whole-House Air Sealing Practices"* . The following locations are considered "not accessible."
   a. Where building structure or mechanically fastened materials block access.
   b. Top plates located adjacent to eave line.
   c. Top plates covered by more than five inches of loose-fill insulation or a combination of loose-fill and batt insulation.
4. Whole-house air sealing requires compliance with *"Evaluating Home Ventilation Levels".*
5. If a combustion appliance is present in the home, perform a combustion appliance zone (CAZ) testing in accordance with *"Worst-Case CAZ Depressurization Test"*.

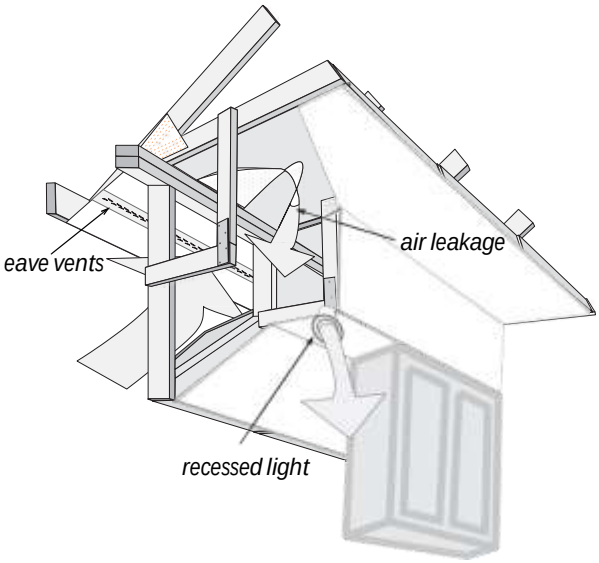

Kitchen soffits: The ventilated attic is connected to the soffit and the wall cavity through framing flaws. Any hole in the soffit creates a direct connection between the kitchen and attic. The photo shows a soffit sealed from the attic with foam board and 2-part spray foam.

14.1 Introduction to Whole-House Air Sealing

Air leakage from one zone to another requires a hole between the zones and pressure to push air through that hole. The airflow rate through a hole or group of holes depends on two factors: the cross-sectional area of the holes and the difference in pressure.

Natural airflows are usually small and variable — too difficult to measure. A blower door's pressure and airflow, however, are steady and measurable. Measuring pressure and airflow with a blower door allows you to estimate energy savings from air sealing.

14.1.1 Air-Sealing Building Science

The most common driving forces for air leakage are wind and temperature. Heated air inside a house is less dense than colder winter air and therefore more buoyant. This lighter air pushes through cracks in the ceiling, which draws cold air in from the crawlspace or through leaks low in the building. This is called "stack effect." Because of stack effect, the most reliably effective air sealing efforts occur in the attic and crawlspace.

Buildings aren't equal with respect to their air pressures. Because of differences in house pressure, one single-family home may have two to four times the air leakage of another home with the same air leaks. Homes with forced-air distribution systems, fireplaces, and large kitchen exhaust fans have larger pressure differences than homes without these features. Homes on hilltops in high-wind areas may have twice the air leakage of homes in less windy regions.

Sealing large plumbing penetrations: Foam board is attached with screws and washers. Gaps around the penetrations are filled with one-part foam to form a complete airtight seal.

14.1.2 Benefits of Blower Door Testing

Blower-door testing is the most practical way to predict energy savings from air-sealing. The combined area of the building's holes and the pressure difference between indoors and outdoors determine how much air volume the blower door moves. This airflow is measured in cubic feet per minute. The standard unit for measuring a home's air leakage is the airflow through a blower door at 50 Pascals of house pressure — abbreviated CFM_{50}. Each 100 CFM_{50} saves a predictable amount of energy and money.

With the blower door depressurizing a house, contractors can identify leaks inside the home simply by feeling around different building components and finding streams of air by touch or by using smoke. With the blower door pressurizing the house, contractors can identify leaks in attics using the same method.

Leaks identified by a blower door can sometimes be indicators of other, more significant leaks. An example of this is a stream of air coming around a light switch on an interior wall. At first glance, it seems that the leak is between the wall cavity and the home. However, the wall cavity is a conditioned space because it is actively by the home. The real leak is between the wall cavity and around the top plate to the attic or through the subfloor and into the crawlspace. Sealing the switch won't reduce heat loss since warm air inside that cavity still escapes.

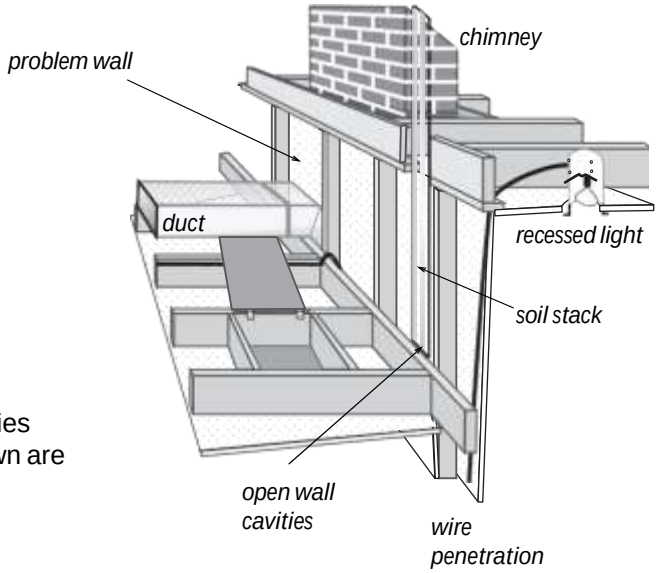

Two-level attic: Split-level homes create wall cavities connected to the ventilated attic. Other air leaks shown are duct, recessed light, and chimney.

14.1.3 Typical Locations of Air Leaks

The ideal building, from a thermal viewpoint, is a simple 6-sided box. This ideal building has no protrusions or indentations. The insulation and air barrier, located adjacent to each other, form a thermal envelope that completely surrounds the conditioned space. Shafts and horizontal building cavities don't connect to one another, nor do they connect the indoors to the outdoors.

Few buildings have these ideal characteristics. Builders, architects, and the general public don't yet understand the benefits of a continuous air barrier at the building's thermal boundary.

Any gaps or holes created in the building's exterior floor, walls, or ceiling during construction contribute to air leakage. Years of wear, weather, remodeling, and repairs create additional air leaks.

14.1.4 Avoiding Risky Situations

Don't perform a blower door test in any of the following risky situations until removing the risk or performing an acceptable building repair.

- A wood stove or fireplace is burning.
- Holes in the ceiling that could lead to dust pollution during a blower door test.

- Extremely weak building components, like a poorly installed suspended ceiling or loose wood wall paneling.
- Lead or asbestos dust or vermiculite is present.

14.2 Whole-House Air Sealing Practices

The blower door measures and helps locate air leaks. Most of these leaks can be sealed with caulk, foam, or weatherstripping. However, carpentry is required to seal some air leaks. A carpenter can bridge large gaps with rigid material in order to complete the air barrier. The following three lists don't document every type of air leak, but serve as a checklist for some of the most significant air leaks.

Table 7 - Attic Air Sealing Checklist

Item	Sealing requirements between conditioned and unconditioned space or the outdoors
Attic hatch/door	Install weatherstripping to create an effective air seal between the attic access frame and hatch/door.
Pull down stair cover	Install a gasket or weatherstripping between frame and door or install an airtight cover between the stairs and attic.
Duct penetrations	Apply mastic, caulk, or other airtight seal around the perimeter of duct boots between the boot and the ceiling.
Chases	Install foam, caulking, and rigid barriers to the attic floor or wall. Near heat-producing devices, provide clearances to combustible materials and use fire-rated materials as appropriate.
Recessed cans (non-IC)	Install foam, caulk or another airtight seal between fixture and ceiling. Or install an airtight drywall box or another non-flammable air-sealed insulation box. Maintain a 3 inch clearance on all sides and above the fixture. Extend the box above the new insulation so that no insulation covers the top
Recessed Cans (IC)	Seal between the interior finish and the fixture. Don't seal over the fixture with spray foam or seal openings in the fixture. An airtight box or prefabricated cover is acceptable. Insulate over the fixture with fibrous insulation.
Bath fans	Apply foam, caulk, or other airtight seal around the fixture perimeter.
Bath fans with heat source	Use fire-resistant caulk. If the opening is larger than 1 inch, span the gap with sheet metal.
Electrical and plumbing penetrations	Apply foam, caulk or other airtight seal around perimeter of electrical fixtures and plumbing penetrations.
Top plates	Seal all accessible drywall-to-top-plate connections, wood-to-wood seams, and penetrations through the top plate with foam or caulk.
Drop soffits	Install rigid material to close off the soffit from the attic, and seal the rigid material with foam or caulk.
Knee wall doors	Attach weatherstripping permanently to create an effective air seal between the attic access frame and the hatch or door. Install a latch or handle if necessary.
Knee Wall Transitions (underfloor paths)	Install rigid material between the joists; then foam or caulk the perimeter of each joist space. Alternatively, roll a fiberglass batt to fit tightly between each joist and cover with foam.
Open wall cavities	Install foam, caulk, or rigid board at the top of balloon-framed walls and to open walls between split-level attic areas.

The following locations are considered "not accessible."

a. Where building structure or mechanically fastened materials block access.
b. Any air sealing opportunities immediately adjacent to eve line (i.e. top plates, electrical and plumbing penetrations, can lights, drop soffits).
c. Attic penetrations covered by more than 5 inches of loose-fill insulation or a combination of loose-fill and batt existing insulation.

Table 8 - Crawlspace Air Sealing Checklist

Item	Sealing requirements between conditioned space and unconditioned space or the outdoors
Crawlspace hatch/door	Permanently attach weatherstripping to create an effective air seal between the crawlspace hatch door and its frame. Install rigid framing material and weatherstripping if the hatch isn't supported by a frame on all 4 sides.
Chases	Seal with foam, caulk, or rigid moisture-resistant material to the floor or wall. Use fire rated materials at chimneys and flues.
Duct penetrations	Seal with mastic, caulk, or other airtight seal around perimeter of duct boots between the boot and the subfloor.
Plumbing and electrical penetrations	Seal with foam or caulk. Use a rigid, moisture resistant material to span gaps larger than 1".
Other open cavities	Use rigid material to cover openings greater than 1". Seal rigid material to the floor with caulk.
Sill plate/stem wall	Between conditioned space and unconditioned crawl spaces, seal the sill plate to the stem wall connection with foam or caulk. Foam or caulk perimeter of each rim joint.
Rim joists	Between conditioned space and unconditioned crawl spaces, seal the sill plate to the stem wall connection with foam or caulk. Foam or caulk perimeter of each rim joint.

Table 9 - Exterior Wall Air Sealing Checklist

Item	Sealing requirements between conditioned and unconditioned spaces or the exterior
Walls between conditioned and unconditioned areas	Seal connection between floor and wall with caulk, if accessible. Tape and mud any unfinished drywall.
Plumbing penetrations	Install foam or caulk. Use rigid barrier if opening is larger than 1".
Doors	Weatherstrip doors and install a door sweep or airtight threshold to create an effective air seal.

Other air leaks identified with a blower door	Caulk or foam electrical boxes, window trim, door trim, and baseboards.

14.3 Air Leakage Testing Protocol

For whole-house air sealing, the contractor must do a blower door test immediately before and immediately after the air sealing. Preparing the house for a blower door test involves putting the house in its normal heating-season operation with all interior doors open to the blower door.

1. Identify the location of the thermal boundary and determine which house zones are conditioned.

2. Close all windows and exterior doors, including pass-through wood-box doors and pet doors.
3. Open interior doors so that all indoor areas inside the thermal boundary are connected to the blower door. This could include the basement, conditioned knee wall areas, bonus rooms, and closets.
4. Turn off combustion appliances temporarily.
5. Identify large air leaks that could prevent the blower door from achieving adequate pressure.
6. Comply with these requirements for positioning ventilation openings for a blower door test.
   a. Open all forced-air supply and return registers.
   b. Don't seal exhaust vents with backdraft dampers (for example: dryer vents, exhaust-fan vents, whole-house fans).
   c. Temporarily seal exterior exhaust fan vent openings without backdraft dampers (for example: some continuous ventilation systems) for the test.
   d. Temporarily seal ventilation supply openings for the test.
7. Combustion appliances: All flue dampers, fireplace doors, and wood burning stove doors must be closed, but NOT sealed. If fireplace or wood-stove doors are leaky and there is a risk of ash or debris being drawn into the home, cover ash with wet newspaper. If ash is still an issue, pressurize the home with the blower door instead of depressurizing the home.

14.3.1 Blower Door Air-Leakage Measurement

Whole-house air sealing requires these steps to quantify air leakage.

1. Set-up the blower door and digital manometer equipment using the manufacturer instructions for depressurization to 50 Pascals. If the home cannot be depressurized to 50 Pascals, follow the testing equipment manufacturer's instructions for converting results at different test pressures.
2. Quantifying air leakage reduction: air leakage reduction is the difference between the CFM_{50} measurements before and after whole-house air sealing.
3. The final CFM_{50} measurement is also used to determine if mechanical ventilation is required.

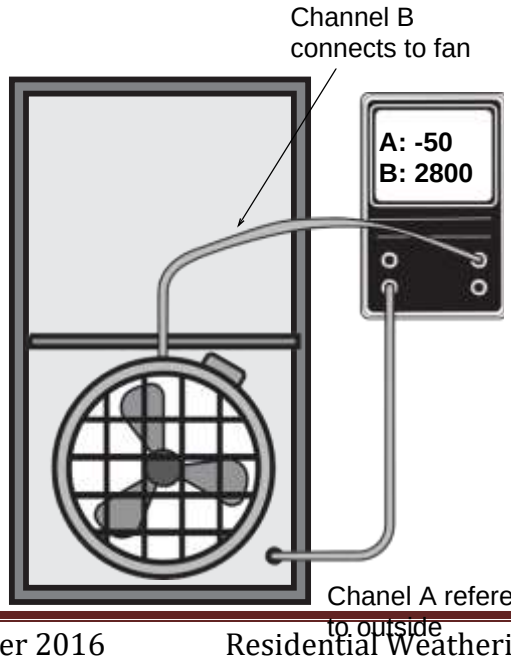

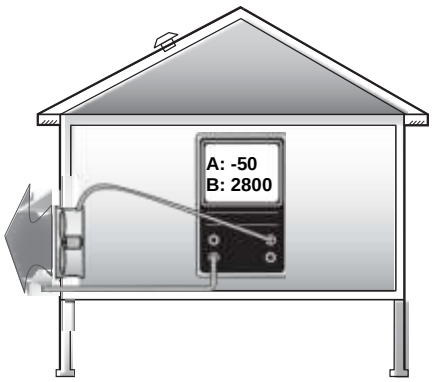

Blower door test: Air barriers are tested during a blower-door test, with the house at a pressure of -50 Pascals with reference to outdoors. This house has 2800 CFM_{50} of air leakage.

14.3.2 Blower-Door Test Follow-Up

As a courtesy to the occupant, return the house to its original condition.

1. Inspect combustion appliance pilot lights to ensure that blower door test didn't extinguish them.
2. Reset thermostats of heaters and water heaters that were turned down for testing.
3. Remove any temporary plugs that were installed.
4. Document the location where the blower door was installed.
5. Document any unusual conditions affecting the blower door test.

15 Evaluating Home Ventilation Levels

Most homes in the Northwest currently rely on air leakage for ventilation. Evaluate natural ventilation using a blower door and use fan-powered ventilation in homes where natural ventilation is insufficient to maintain good indoor air quality.

Contractors who choose to do whole-house air sealing during weatherization must evaluate ventilation following 3 distinct components.

- Whole-building ventilation requirement.
- Local exhaust ventilation requirement.
- Natural ventilation credit.

15.2 Whole-Building Ventilation Requirement

The whole-building ventilation requirement estimates the amount of ventilation needed to dilute ambient moisture and pollutants from everyday activities, including the breathing of occupants. Use either the formula below or the table with common values shown in *"Whole-House Ventilation Requirements"* to determine the whole-building ventilation requirement.

1. Determine the floor area of the conditioned space of the home in square feet, including a conditioned basement (A_{floor}).
2. Determine the number of bedrooms (N_{br}).
3. Insert these numbers in the formula below to compute the total ventilation rate (Q).

WHOLE-HOUSE VENTILATION REQUIREMENT (CFM): $Q = 0.03A_{FLOOR} + 7.5(N_{BR} + 1)$

15.3 Local Exhaust Ventilation Requirement

Good indoor air quality relies on controlling pollutants at their source. Local ventilation fans should quickly evacuate moisture and pollutants from showers and cooking.

New Exhaust Fans: To comply with ventilation requirements, contractors usually install new fans and new ducts to achieve adequate airflow. Existing fans are noisy and ineffective because of the poor venting practices of the past.

Bathrooms need a fan capable of exhausting 50 CFM to remove moisture generated by a shower. Kitchens require a fan with a 100-CFM capacity to remove moisture and pollutants from cooking. Contractors must measure the flow rate of the exhaust fan. If the fan configuration prevents use of airflow measuring devices, contractors may assume $^{2}/_{3}$ of the fan's rated flow.

The presence of one or more operable windows in a kitchen or bathroom contributes 20 CFM to the local exhaust ventilation requirement.

Most houses can tolerate moisture from showers and cooking if the natural ventilation is higher than the whole-house ventilation capacity. If the existing exhaust fans and windows don't meet the local ventilation requirement, increase the whole-house ventilation requirement to compensate. Use the formula below to calculate the local ventilation deficit (Q_{def}). Local exhaust fans, operable windows, and a central ventilation system can work together to meet local-ventilation requirements for the bathroom and kitchen.

Local Ventilation Deficit (CFM) = (Total CFM deficits of kitchen and bathrooms) ÷ 4

Example: The kitchen of a home has a small range hood providing 30 CFM and a window for an additional 20 CFM. The main bathroom has a fan providing around 30 CFM and no operable window. The second bath has an operable window but no fan. Follow the steps below to find the necessary additional whole-house ventilation.

How to Find the Local Ventilation Deficit: 5 Steps

1. KITCHEN DEFICIT: **100 – (30 + 20) = 50 CFM**
2. BATHROOM 1 DEFICIT: **50 – 30 = 20 CFM**
3. BATHROOM 2 DEFICIT: **50 – 20 = 30 CFM**
4. TOTAL DEFICIT: **50 + 20 + 30 = 100 CFM**
5. LOCAL VENTILATION DEFICIT: **100 ÷ 4 = 25 CFM**

15.4 Natural Ventilation Credit

Determine the rate of natural ventilation in the home using the final blower door measurement. Divide the blower door measurement by the appropriate N-value based on climate and number of stories above grade. *See "N-Values for CFMn-to-CFM$_{50}$ Conversion".*

If the estimated natural ventilation is less than the whole-house ventilation requirement plus any local ventilation deficit, make up the difference with fan-powered ventilation. The fan-powered ventilation system must provide the difference between the natural ventilation and the required ventilation. Homes often have multiple possible strategies to comply with the ventilation requirement.

Natural Ventilation Credit (CFM) = Blower Door Measurement (CFM_{50}) ÷ N

Example: Evaluate the ventilation needs of a 3 bedroom, 2025 square-foot two-story home in Yakima. This home has a local ventilation deficit of 25 CFM, which we calculated previously. This home has a blower-door-measured air leakage of 1900 CFM_{50}. From *"N-Values for CFMn-to-CFM$_{50}$ Conversion"*, this Yakima 2-story home has an N-value of 20. Dividing the measured air leakage by N calculates the natural airflow rate, which we subtract from the whole-house ventilation requirement to get the airflow of the mechanical ventilation system.

Does this home require a whole-house ventilation system? Follow the steps below to find the answers.

STEP 1: FIND THE WHOLE-BUILDING VENTILATION REQUIREMENT

1. FIND THE SQUARE-FOOT COMPONENT: **2025 SF X 0.03 = 61 CFM**
2. FIND THE BEDROOM COMPONENT: **(3+1) X 7.5 = 30 CFM**
3. ADD THE TWO TO FIND THE TOTAL: **61 + 30 = 91 CFM**

STEP 2: FIND THE ADJUSTED WHOLE-BUILDING VENTILATION REQUIREMENT

1. FIND THE NATURAL VENTILATION: **1900 CFM_{50} ÷ 20 = 95 CFM**
2. FIND Q_{ADJ}: **91 + 25 = 116 CFM** (25 **IS THE LOCAL VENTILATION DEFICIT)**
3. SUBTRACT Q_{ADJ} – QNV: **116 - 95 = 21 CFM**

THIS HOME NEEDS A VENTILATION SYSTEM RATED AT **21 CFM** CONTINUOUS.

15.3.1 Example Calculation: Building Tightness Limit (BTL)

In some cases, it's useful to calculate the lowest blower door measurement where natural ventilation is adequate to meet these requirements, which is referred to as the Building Tightness Limit (BTL). To calculate the BTL, multiply the adjusted ventilation rate (Q_{adj}) by the N-Value. The adjusted ventilation rate (Q_{adj}) is the sum of the total ventilation rate (Q) plus the local ventilation deficit (Q_{def}). From the previous example, this Yakima 2-story home has a Q_{adj} of 130 CFM and an N-value of 20.

HOW TO FIND THE BUILDING TIGHTNESS LIMIT (BTL)

$$BTL = Q_{ADJ} \times N$$

$$BTL = 130 \times 20 = 2600\ CFM_{50}$$

15.4 Mechanical Ventilation Strategies

If natural ventilation is insufficient to meet the requirements calculated in this chapter, contractors must provide the additional ventilation using one of the following fan-powered ventilation strategies.

a. A dedicated exhaust or supply fan running continuously or cycling by automatic control.
b. A bathroom or kitchen exhaust fan running continuously or cycling by automatic control.
c. A central air handler drawing exterior air into its return and cycling by automatic control.
d. A balanced ventilation system such as a heat-recovery ventilator (HRV) or energy-recovery ventilator (ERV).

Mechanical ventilation strategies may be set to run continuously if the fan is rated for continuous operation. There must not be a control switch that makes it easy for an occupant to turn off the mechanical ventilation. If mechanical ventilation is set to run intermittently, there must be at least two periods of runtime per day.

Some homes may be best served by a contractor who reduces air leakage as much as possible without crossing the BTL threshold, and therefore avoids having to install mechanical ventilation. However, some homeowners prefer to have their home sealed to the lowest possible value, reducing natural ventilation as much as possible, and adding mechanical ventilation. This strategy has the benefit of reducing the variations that are common with natural ventilation, and certain mechanical ventilation types allow the contractor to choose the source of incoming air. The strategy of "seal tight and ventilate right" provides the best comfort to occupants and can improve indoor air quality. The following chapter explains requirements and best practices for using mechanical ventilation to meet these requirements.

16 Mechanical Whole-House Ventilation

All homes receiving whole-house air sealing must comply with the ventilation requirements in *"Evaluating Home Ventilation Levels"*. This may require installation of a whole-house ventilation system or exhaust fans in kitchens and bathrooms.

Whole-House Ventilation Benefits: Natural ventilation is an unreliable source of fresh air. It varies seasonally, with periods of over-ventilation when internal and external temperature differences are large, and periods of under-ventilation during temperate weather. Air leakage doesn't ventilate all areas of the building equally, leaving some areas fresh, and others stagnant and polluted. Natural ventilation doesn't consider the source of incoming air, and much of the "fresh" air actually passes through a crawlspace. Mechanical ventilation systems control the timing and amount of ventilation. Mechanical ventilation saves energy and keeps the air fresh while occupants are home.

16.1 Local Ventilation

In order for ventilation fans to fully evacuate pollutants, ducts must extend to the exterior of the structure, be airtight, and not restrict airflow. Bath fan exhaust ducts with excessive turns and sags reduce the airflow from the fan.

Existing and newly installed local ventilation must meet the following requirements for all homes receiving whole-house air sealing. Existing rigid or flexible metal vent ducts may remain if they are free of holes or kinks and are in otherwise good condition, provided they are sealed and vented to the exterior to prevent exhaust air from entering the attic.

16.1.1 Ducts for Ventilation Fans

New and existing bath, kitchen, exhaust, and whole-house ventilation fans must be sealed, secured and vented to the exterior of the structure. All fans must comply with these requirements.

1. Exhaust ducts must be sheet metal or HVAC flex-duct and insulated to a minimum of R-4 if in unconditioned space. Vinyl coil ducts must be replaced.
2. Any newly installed exhaust ducts must be sized according to *"Exhaust Fan Prescriptive Duct Sizing1*.
3. All exhaust fans must vent to the outdoors. Ducts must be mechanically fastened using sheet metal screw or clamps and be substantially airtight. Mechanical fasteners must not interfere with dampers.
4. Exhaust fan ducts should be adequately supported to prevent sagging, and be as straight as possible to maximize effective air flow, and have no more than two 90-degree turns, or equivalent.
5. Kitchen exhaust ducts must be made of 28-gauge galvanized steel, stainless steel, aluminum, or copper.
6. Existing rigid or flexible metal vent ducts may remain if they are free of holes and kinks and are in otherwise good condition.
7. If the fan housing contains no backdraft damper, install a backdraft damper for exhaust duct terminations unless the fan operates continuously.

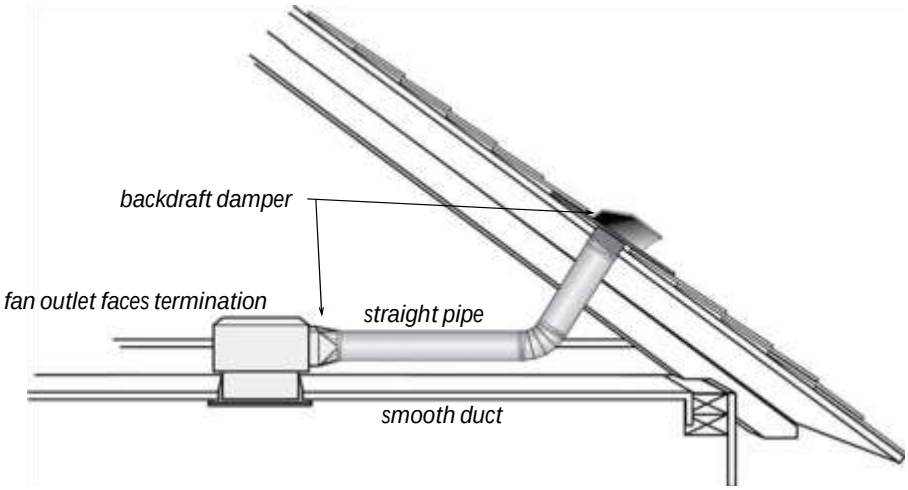

Ducts and fittings for exhaust fans: Either the fan, the termination fitting, or both, should contain a backdraft damper. Smooth duct has much less resistance than flex duct. Ducts should be insulated to R-4.

16.1.2 Dryer Exhaust

Dryer exhaust ducts must vent to the outdoors and comply with these requirements.

1. Ducts must have a backdraft damper, and terminate in a code-approved vent cap.
2. New dryer ducts must be rigid metal, securely connected with mechanical fasteners, permanently supported, and sized according to manufacturer's specifications.
3. Dryer ducts must be as straight as practical, must not exceed 25 feet in length and, where possible, slope downward away from the dryer.
4. To prevent blockage with lint, don't connect new dryer vent ducts with screws. Use a metal clamp or UL-rated foil tape to secure dryer duct connections.

16.1.3 Exhaust System Makeup Air

Exhaust systems capable of exhausting in excess of 400 CFM are becoming common in new and remodeled kitchens. The airflow through these fans is enough to backdraft combustion appliances and chimneys, and can induce considerable air exchange.

Exhaust systems capable of exhausting greater than 400 CFM should be provided with makeup air at a rate approximately equal to the exhaust air rate as a part of whole-house air sealing. Such makeup air systems should be equipped with a means of closure and automatically controlled to start and operate simultaneously with the exhaust system.

16.2 Mechanical Ventilation Strategies

Whole-house mechanical ventilation controls moisture and improves indoor air quality, especially in tighter homes. Whole-house mechanical ventilation strategies provide consistent fresh air and aren't subject to the seasonal variations of natural ventilation. Some mechanical ventilation strategies let contractors choose the source of fresh air, ensuring that incoming air doesn't pass through the crawlspace. Comply with the following requirements when installing a whole-house mechanical ventilation system.

1. If fan-powered ventilation is used to meet the whole-house ventilation requirement, measure fan airflow rates and don't assume that the rated airflow is correct. *Exception*: If the airflow measuring device can't be fitted to the exhaust fan, assume that the fan delivers $^{2}/_{3}$ of its rated airflow.
2. The whole-house mechanical ventilation system must either run continuously, or run intermittently on a timer to achieve the same airflow capacity of continuous operation.

16.2.1 Exhaust Ventilation

A bath fan or dedicated exhaust fan may be used to meet the whole building ventilation requirement. Bath fans used for meeting the whole-house mechanical ventilation requirement must have automatic controls set to deliver the required amount of whole-house ventilation. Bath fans which also provide local ventilation must have separate controls to deliver local ventilation as needed. Newly installed fans must be rated at 1 sone or less.

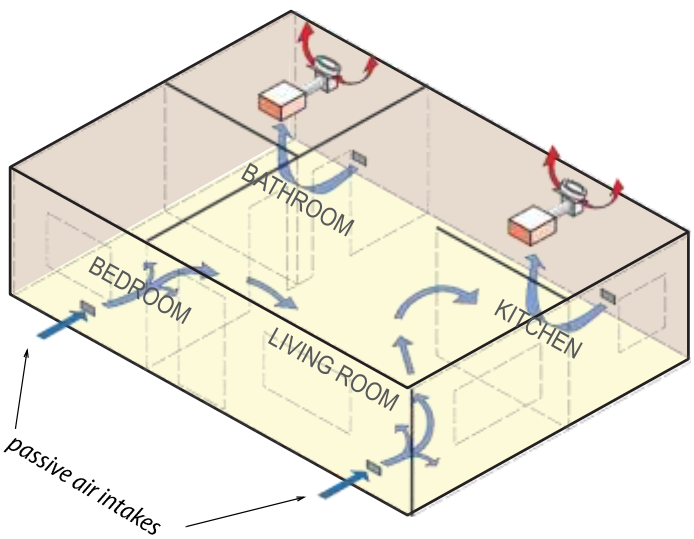

Exhaust ventilation: Exhaust fans and passive air intakes combine to maintain good indoor air quality.

16.2.2 Fresh Air Inlets

If a contractor installs fresh air inlets to provide make-up air as part of an exhaust ventilation system, these requirements apply.

1. Locate air inlets, which are part of the ventilation system, a minimum of 10 feet away from known sources of contamination such as plumbing stacks, combustion vents, exhaust hoods, or vehicle exhaust.
2. Place the fresh air inlet so that snow, plants, or other material can't obstruct entering air.
3. Inlets must have rodent/insect screens with mesh between $^{1}/_{16}$ inch and $^{1}/_{2}$ inch in width.

16.2.3 Balanced Ventilation

Balanced ventilation systems have exhaust fans and supply fans installed in one housing. Some types of balanced ventilation systems include a heat exchanger that allows heat energy to pass between outgoing and incoming air streams without allowing any mixing or dilution of the fresh air. Balanced ventilation allows contractors to choose the location for incoming air. Inlet duct locations should meet the requirements in *"Fresh Air Inlets"* above.

Energy or Heat Recovery Ventilators installed for whole-house mechanical ventilation purposes must be certified and listed in the *Home Ventilating Institute Directory*, be *ENERGY STAR compliant*, and be rated for continuous operation.

16.3 Combustion Safety-Testing

Operation of exhaust fans, dryers, and air handlers can depressurize parts of a home relative to other areas or the outside. Door closures can worsen this problem as they block the air emitted by a register from returning to the main part of the house where a return is located. In this case, the room is pressurized and the main zone is depressurized. If a vented combustion appliance is located in a depressurized zone, combustion gases can backdraft and enter the home. Combustion appliance zone (CAZ) depressurization is the leading cause of backdrafting and flame roll-out in furnaces and water heaters that vent into naturally drafting chimneys.

Performing worst-case tests can identify health hazards, such as carbon monoxide. Worst-case vent testing uses the home's exhaust fans, air handler, and chimneys to create worst-case depressurization in the CAZ. The CAZ is an area containing one or more combustion appliances. During this worst-case testing, you can test for spillage, measure the CAZ pressure difference with reference to (WRT) outdoors, and measure chimney draft WRT the CAZ.

Worst-case conditions do occur, and venting systems must be capable of exhausting combustion byproducts even under these extreme conditions. A digital manometer is the best tool for accurate and reliable readings of both combustion-zone depressurization and chimney draft.

Contractors must perform a "worst case depressurization test" before and after whole-house air sealing, for all combustion appliance zones (CAZs).

Worst-case depressurization: Worst-case depressurization tests identify problems that weaken draft and restrict combustion air. The testing described here is intended to reveal the cause of the CAZ depressurization and spillage.

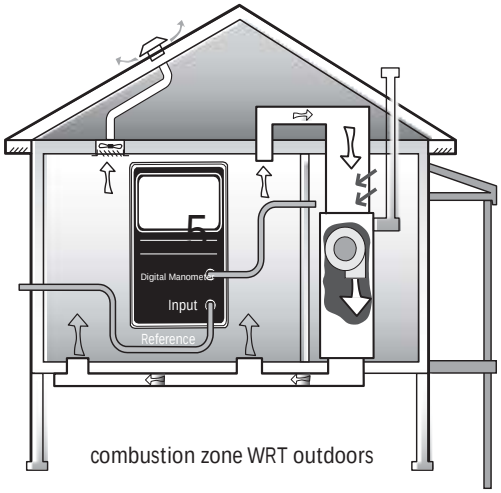

16.3.1 Combustion Safety Standards

If a CAZ fails worst-case depressurization testing before whole-house air sealing, the contractor must inform the homeowner and mitigate the problem as part of the weatherization work scope. If the CAZ fails after the whole-house air sealing, the contractor must mitigate the problem before the project is finished. A CAZ fails the worst-case test if it is depressurized by more than the pressures on the table shown at worst-case.

Table 10 - CAZ Depressurization Limits for Combustion Appliances

Appliance	Maximum Depressurization
Power-vented or sealed-combustion furnace or boiler; pellet stove with draft fan and sealed vent *	–10 pa (–0.04 IWC)
Gas furnaces and boilers with atmospheric burners	–5 pa (–0.02 IWC)
Oil burner and fan-assisted (induced-draft) gas *	
Wood-burning appliances	
Atmospherically vented water heater	–2 pa (–0.008 IWC)

*Individual combustion appliances may be capable of operating safely at CAZ depressurization more negative than –10 Pascals. However CAZ depressurization is a potential problem for numerous reasons and can usually be reduced. The causes are most often return-air leakage or large exhaust fans.

16.3.2 Worst-Case CAZ Depressurization Test

Follow the steps below to find the worst-case depressurization level in the CAZ.

1. Verify that all exterior doors, windows, and fireplace damper(s) are closed, and measure the base pressure.
2. Set all combustion appliances to the pilot setting or turn them off.
3. Measure and record the base pressure of each CAZ with reference to outdoors. If the digital manometer has a baseline function, use this function to cancel out the baseline pressure now.
4. Turn on the dryer and all exhaust fans and check each CAZ pressure with reference to outdoors.
5. Turn on the air handler, if present, using the "fan on" switch. Leave the air handler on if the pressure in the CAZ becomes more negative after you turn it on.
6. Close interior doors while the air handler is operating to maximize the negative pressure. If closing the door makes the CAZ less negative, open the door for the remainder of the test. Repeat for each door in the home.
7. Measure the worst-case pressure and record it. Compare this number to the table entitled, *"CAZ Depressurization Limits for Combustion Appliances" above* for the tested appliance.

16.3.3 Spillage and CO Testing

As a service to the occupant and the homeowner, contractors may choose to perform spillage and combustion tests. Test each appliance in turn for spillage and carbon monoxide (CO) as described below.

1. Operate and test the appliance with the smallest BTUH capacity first and then the next largest appliance, leaving the smaller one on. Retest the smaller appliance again after testing the larger one with both operating.

2. Look for spillage at the draft diverter with a smoke generator, a lit match, or a mirror. For each appliance, find out whether combustion byproducts spill and how long after ignition the spillage stops.
3. If spillage in one or more appliances continues for two minutes or more under worst-case, recommend service to correct the problem.
4. Measure CO in the undiluted flue gases after five minutes of operation at worst-case conditions. If CO in undiluted flue gases is more than 100 ppm as measured or 200 ppm air-free measurement, order a service call to reduce CO level (unless your CO measurement is within manufacturers specifications).

Measuring CO: Measure CO in undiluted combustion gases as they leave the heat exchanger.

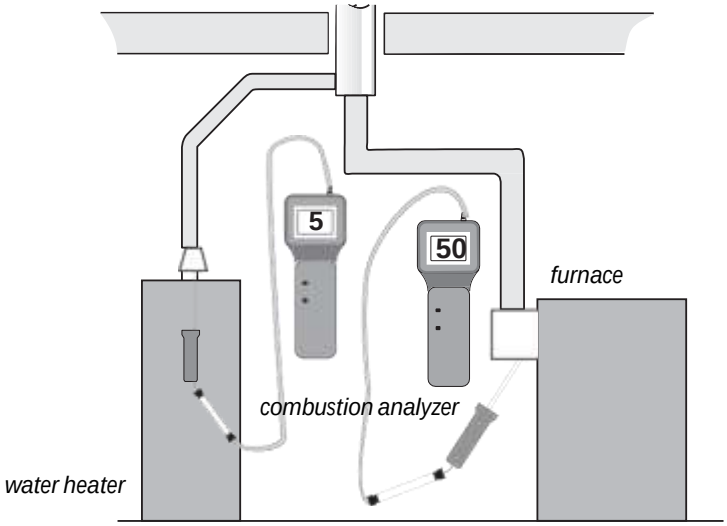

16.3.4 Improving Draft

If you find problems with spillage, or CO, open a window, exterior door, or interior door to observe whether this additional combustion airflow through that opening improves draft.

1. If this additional air improves draft, the problem is usually depressurization.
2. If this additional air doesn't improve draft, inspect the chimney. The chimney may be obstructed, undersized, oversized, or leaky.

16.3.5 Improvements to Solve CAZ Depressurization

This list of duct improvements may solve draft problems discovered during the previous tests on a forced air heating system.

1. Seal all return duct leaks near the furnace.
2. Isolate the CAZ from return registers by air-sealing the CAZ from the zone containing the return register.
3. Reduce depressurization from exhaust appliances.

These two suggestions may reduce depressurization caused by the home's exhaust appliances.

1. Isolate combustion appliances from exhaust fans and clothes dryers by air sealing between the CAZ and the zones containing these exhaust devices.

2. Provide make-up air for dryers and exhaust fans and/or provide combustion air inlet(s) to combustion zone.

Table 11 - Draft Problems and Solutions

Problem	Possible Solutions
Adequate draft never established	Remove chimney blockage, seal chimney air leaks, or provide additional combustion air as necessary.
Blower activation weakens draft	Seal leaks in the furnace and in nearby return ducts. Isolate the furnace from nearby return registers.
Exhaust fans weaken draft	Provide make-up or combustion air if opening a door or window to outdoors improves draft during testing.

16.3.6 Chimney Improvements to Solve Draft Problems

Suggest the following chimney improvements to solve draft problems uncovered during the previous testing.

1. Remove chimney obstructions.
2. Repair disconnections or leaks at joints and where the vent connector joins a masonry chimney.
3. Measure the size of the vent connector and chimney and compare to vent-sizing information listed in Chapter 13 of the *National Fuel Gas Code (NFPA 54)*. A vent connector or chimney liner that is either too large or too small can reduce draft.
4. If wind interferes with draft, install a wind-dampening chimney cap.
5. If the masonry chimney is corroded, install a new chimney liner.
6. Increase the pitch of horizontal sections of vent.

16.3.7 Zone Isolation Testing for Atmospherically Vented Appliances

An isolated CAZ improves the safety of atmospherically vented appliances. The CAZ is isolated if it receives combustion air only from outdoors. An isolated CAZ doesn't require worst-case depressurization and spillage tests. However, you should inspect the CAZ for connections with the home's main zone and make sure it is isolated.

1. Look for connections between the isolated CAZ and the home. Examples include joist spaces, transfer grills, leaky doors, and holes for ducts or pipes.
2. Measure a base pressure from the CAZ to outdoors.
3. Perform 50-pascal blower door depressurization test. The CAZ-to-outdoors pressure should not change more than 5 Pascals during the blower door test.
4. If the CAZ-to-outdoors pressure changed more than 5 Pascals, air-seal the zone, and retest as described in steps 2 and 3.
5. If you can't air-seal the CAZ adequately to isolate the zone, solve worst-case depressurization and spillage problems as described in *"Combustion Safety-Testing"*.

APPENDIX 1: WHOLE-HOUSE VENTILATION REQUIREMENTS

Table 12 - CFM Requirements for Homes

Floor Area (ft^2)	Number of Bedrooms				
	1	**2**	**3**	**4**	**5**
<500	30	38	45	53	60
501–1000	45	53	60	68	75
1001–1500	60	68	75	83	90
1501–2000	75	83	90	98	105
2001–2500	90	98	105	113	120
2501–3000	105	113	120	128	135
3001–3500	120	128	135	143	150
3501–4000	135	143	150	158	165
4001–4500	150	158	165	173	180
4501–5000	165	173	180	188	195

Fan flow in CFM.

APPENDIX 2: EXHAUST FAN PRESCRIPTIVE DUCT SIZING

Use table below to size new exhaust fan ducts correctly.

Table 13 - Exhaust Fan Prescriptive Duct Sizing

	Rated Fan CFM							
	50	80	100	125	150	200	250	300
Duct Dia.	**Smooth Hard Duct - Maximum Duct Length in Feet**							
3”	5	X	X	X	X	X	X	X
4”	114	31	10	X	X	X	X	X
5”	NL	152	91	51	28	X	X	X
6”	NL	NL	NL	168	112	53	25	9
7”	NL	NL	NL	NL	NL	148	88	54
8”	NL	NL	NL	NL	NL	NL	198	133
Duct Dia.	**HVAC Flex Duct - Maximum Duct Length in Feet**							
3”	X	X	X	X	X	X	X	X
4”	56	4	X	X	X	X	X	X
5”	NL	81	42	16	2	X	X	X
6”	NL	NL	158	91	55	18	1	X
7”	NL	NL	NL	NL	161	78	40	19
8”	NL	NL	NL	NL	NL	189	111	69

NL: No limit;
X: not allowed
Table assumes no elbows. Deduct 15 ft from allowable duct length for each elbow.

APPENDIX 3: N-VALUES FOR CFMN-TO-CFM$_{50}$ CONVERSION

Multiply by the N-value to change CFMn (natural cubic feet per minute) to CFM$_{50}$ (cubic feet per minute at 50 Pascals blower door measurement). Divide CFM$_{50}$ by N to get CFMn.

Table 14 - N-Values for Locations in the BPA Region

City/Station	State	1	1.5	2	2.5	3
Boise Air Terminal	Idaho	23	20	18	17	16
Lewiston Nez Perce	Idaho	28	25	23	21	20
Pocatello Regional AP	Idaho	21	18	17	16	15
Billings	Montana	18	16	15	14	13
Cut Bank	Montana	19	17	15	14	14
Dillon	Montana	22	19	18	17	16
Glasgow	Montana	19	17	16	15	14
Great Falls	Montana	19	17	15	14	14
Helena	Montana	22	20	18	17	16
Lewiston	Montana	22	19	18	17	16
Missoula International AP	Montana	25	22	20	19	18
Astoria Regional Airport	Oregon	23	21	19	18	17
Medford Rogue Valley	Oregon	30	26	24	22	21
North Bend Muni	Oregon	22	19	18	17	16
Portland International AP	Oregon	26	23	21	20	19
Redmond Roberts Field	Oregon	25	22	20	19	18
Salem McNary Field	Oregon	25	22	20	19	18
Olympia Airport	Washington	26	23	21	19	18
Seattle Boeing Field	Washington	23	21	19	18	17
Spokane International AP	Washington	23	21	19	18	17
Yakima Air Terminal	Washington	24	22	20	19	18

APPENDIX 4: GLOSSARY

Accessible - The characteristic to describe a building cavity or space within a building that workers can work within with satisfactory safety and effectiveness.

Air barrier - Any part of the building shell that offers resistance to air leakage. The air barrier is effective if it stops most air leakage. The primary air barrier is the most effective of a series of air barriers.

Air changes per hour at 50 Pascals (ACH50) - The number of times that the complete volume of a home is exchanged for outside air each hour, when a blower door depressurizes the home to 50 Pascals.

Air exchange - The total building air exchanged with the outdoors through air leakage and ventilation.

Air-impermeable insulation - An insulation like high-density spray polyurethane foam that is a good air barrier compared to fibrous insulations.

Appliance - Any device powered by electricity or gas designed for household use. A typical appliance is a refrigerator.

Attic - The unfinished space between the ceiling assembly of the top story and the roof assembly.

Backdraft damper - A damper, installed near a fan, that allows air to flow in only one direction.

Backer rod - Polyethylene foam rope used as a backer for caulking.

Band joist - The outermost joist around the perimeter of the floor framing. See Rim joist.

Basement - The portion of a building that is partly or completely below grade.

Batt - A narrow blanket of fiberglass insulation, often 14.5 or 22.5 inches wide.

Belly return - A configuration found in some manufactured homes that uses the belly cavity as the return side of the distribution system.

Blower door - A device that consists of a fan, a removable panel, and gauges used to measure and locate air leaks.

Blown insulation - A loose-fill insulation that is blown into attics and building cavities using an insulation blowing machine.

Boot - A duct section that connects between a duct and a register.

Building cavities - The spaces inside walls, floors, and ceilings between the interior and exterior sheeting.

Building science - Branch of science concerned with comfort, health, safety, energy efficiency, and durability of buildings.

Carbon monoxide - An odorless and poisonous gas produced by incomplete combustion.

Caulking - A mastic compound for filling joints and cracks. Installed with a caulking gun.

Cellulose insulation - Insulation, packaged in bags for blowing, made from newspaper or wood waste and treated with a fire retardant.

CFM50 - The number of cubic feet per minute of air flowing through the fan housing of a blower door when the house pressure is 50 Pascals (0.2 inches of water). This figure is the most common and accurate way of comparing the airtightness of buildings that are tested using a blower door.

CFMn - The number of cubic feet of air flowing through a house from indoors to outdoors during typical, natural conditions. This figure can be roughly estimated using a blower door.

Chimney - A primary vertical structure containing one or more flues, for the purpose of carrying gaseous products of combustion and air from a fuel-burning appliance to the outside atmosphere.

Combustible - The rating for building materials that will burn under some conditions.

Combustion air - Air that provides oxygen for combustion.

Combustion analyzer - A device used to measure steady-state efficiency of combustion heating units.

Combustion appliance zone (CAZ) - A zone within the home that contains a combustion appliance for the purpose of space heating or water heating.

Condense - When a gas turns into a liquid as it cools, we say it condenses. Condensation is the opposite of evaporation.

Conditioned - Heated or cooled areas of a building are said to be conditioned, either intentionally or unintentionally.

Conditioned space - For energy purposes, space within a building that is provided with heating and/or cooling equipment or systems, or communicates directly with a conditioned space. For mechanical purposes, an area, room or space being heated or cooled by any equipment or appliance.

Conduction - Heat flow from molecule to molecule in a solid substance.

Confined space - A space with a volume of less than 50 cubic feet per 1,000 BTUH of the total input rating of all combustion appliances installed in that space.

Contractor - Any for-profit, not-for-profit, or government entity that provides services to the program under contract, not as a result of a grant of funds.

Convection - The transfer of heat caused by the movement of a fluid like water or air. When a fluid becomes warmer it becomes lighter and rises.

Cooling load - The maximum rate of heat removal required of an air conditioner when the outdoor temperature and humidity are at the highest expected level.

Cost-effective - Having an acceptable payback, return-on-investment, or savings-to-investment ratio.

Cubic foot per minute (cfm) - A measurement of air movement past a certain point or through a certain structure.

Density - The weight of a material divided by its volume, usually measured in pounds per cubic foot.

Dew point - The warmest temperature of an object in an environment where water condensation from the surrounding air would form on that object.

Direct vent - A combustion appliance that draws combustion air from outdoors and vents combustion products to outdoors.

Distribution system - A system of pipes or ducts used to distribute energy.

Dormer - A vertical window projecting from a roof.

Drainage plane - A space that allow water storage and drainage in a wall cavity, adjacent to or part of the weather-resistant barrier.

Drywall - Gypsum interior wallboard used to produce a smooth and level interior wall surface and to resist fire.

Eave - The part of a roof that projects beyond its supporting walls. See also soffit.

Efficiency - The ratio of output divided by input.

Energy - A quantity of heat or work.

Energy audit - The process of identifying energy conservation opportunities in buildings.

Energy consumption - The conversion or transformation of potential energy into kinetic energy for heat, light, electricity, etc.

Energy conservation - Reducing energy consumption.

Energy efficiency - Term describing how efficiently a building component uses energy.

Energy factor - The fraction of water heater input remaining in 64 gallons of hot water extracted from a water heater.

Energy-recovery ventilator - A ventilator that recovers latent and sensible energy from the exhaust air stream and imparts it to the incoming air stream.

Envelope - The building shell. The exterior walls, floor, and roof assembly of a building. Also sometimes denotes a building cavity or building assembly.

Fahrenheit - A temperature scale used in the United States and a few other countries. On the Fahrenheit scale water boils at 212°F and freezes at 32°F.

Fiberglass - A fibrous material made by spinning molten glass.

Fibrous insulation - Insulation made of mineral or cellulose fibers including fiberglass, cellulose and rock wool.

Fill tube - A plastic or metal tube used for its stiffness to blow insulation inside a building cavity.

Final inspection - An evaluation of a weatherization job after its completion.

Fire barrier - A tested building assembly, designed to contain a fire for a particular time period: typically 1-to-4 hours.

Fire stop - Framing member designed to stop the spread of fire within a wall cavity.

Firewall - A structural wall between buildings designed to prevent the spread of a fire.

Flammability - The rating for building materials that will burn readily when exposed to a flame.

Flashing - Waterproof material used to prevent leakage at intersections between the roof surface at walls or penetrations.

Flush fin - A window fin that seals to a flat exterior surface such as stucco.

Floor joists - The framing members that support the floor.

Foam board - Plastic foam insulation manufactured most commonly in 4'x8' sheets in thicknesses of $^{1}/_{4}$" to 3".

Foam compatible adhesive - Adhesive that is manufactured for the purpose of safely adhering to foam.

Gable - The triangular section of an end wall formed by the pitch of the roof.

Gable roof - A roof shape that has a ridge at the center and slopes in two directions.

Gasket - Elastic strip that seals a joint between two materials.

Glazing - Glass installation. Pertaining to glass assemblies or windows.

Glazing compound - A flexible, putty-like material used to seal glass in its sash or frame.

Ground-moisture barrier - Most crawlspaces require ground-moisture barriers to prevent the ground from being a major cause of moisture problems. The ground under a building is the most potent source of moisture in many buildings, especially those built on crawlspaces.

Head flashing - Rigid flashing that directs water away from the top of a window.

Heat-recovery ventilator - A central ventilator that transfers heat from exhaust to intake air.

Heat transmission - Heat flow through the walls, floor, and ceiling of a building. Does not include air leakage.

Heat-transfer coefficient - The amount of heat that will flow through a square foot of building cross-section experiencing a temperature difference of 1° F. See U-factor.

Heating degree day - Each degree that the average daily temperature is below the base temperature (usually 65°F) constitutes one heating degree day.

Heating load - The maximum heating rate needed by a building during the very coldest weather.

Home Ventilating Institute - A non-profit organization that certifies ventilating products.

House pressure - The difference in pressure between the indoors and outdoors measured by a manometer.

Ignition barrier - A material installed to prevent another material, often plastic foam, from catching fire.

Inch of Water Column (IWC) - The pressure exerted by a column of water of 1 inch in height. See also Pascal.

Infiltration - The inflow of outdoor air into the indoors, which is accompanied by an equal outflow of air from indoors to the outdoors.

Insulated glass - Two or more glass panes spaced apart and sealed in a factory.

Insulation - Material with relatively high thermal resistance.

Intermediate zone - A zone located between the building's conditioned spaces and outdoors, like a crawlspace or attic.

International Code Council - An organization that writes and publishes building codes.

Intumescent paint - A special paint designed and manufactured to be an ignition barrier when applied to spray foam insulation.

Jamb - The side or top piece of a window or door frame.

Joist - A horizontal wood framing member that supports a floor or ceiling.

Kilowatt (kW) - A unit of electric power equal to 1000 joules per second or 3412 BTUs per hour.

Kilowatt-hour (kWh) - A unit of electric energy equal to 3600 kilojoules or 3412 BTUs.

Lath - A thin strip of wood or base of metal or gypsum board serving as a support for plaster.

Living space - A space in a dwelling that is lived in or regularly occupied. This space may be conditioned or unconditioned.

Low-e - Short for low emissivity, which means the characteristic of a metallic glass coating to resist the flow of radiant heat.

Masonry - Construction of stone, brick, or concrete block.

Make-up air - Air supplied to a space to replace exhausted air.

Mastic - A thick creamy substance used to seal seams and cracks in building materials.

Manufactured home - A home built on a steel trailer chassis in a factory and delivered to the home site by a truck.

Mobile home - Same as manufactured home. Considered by the manufactured housing industry as an obsolete term.

Mortar - A mixture of sand, water, and cement used to bond bricks, stones, or blocks together.

Nailing fin - A window fin with holes for fastening to sheathing or a window buck.

Natural ventilation - Ventilation using only natural air movement, without fans.

Net free area - The area of a vent after that area has been adjusted for insect screen, louvers, and weather coverings. The net free area is always less than the actual area.

Noncombustible material - Materials that pass the test procedure for defining non-combustibility of elementary materials set forth in ASTM E 136.

Pascal - A unit of measurement of air pressure. See also Inch of Water Column.

Payback period - The number of years that an investment in energy conservation will take to repay its cost in energy savings.

Perm - A measurement of how much water vapor a material will let pass through it per unit of time.

Plate - A piece of lumber installed horizontally to which the vertical studs in a wall frame are attached.

Plenum - The piece of ductwork that connects the air handler to the main supply duct.

Polyethylene - Polymer plastic used for vapor barriers, air barriers, and foam backer rod.

Polyisocyanurate - A plastic foam insulation sold in sheets, similar in composition to polyurethane.

Polystyrene insulation - A rigid plastic foam insulation, usually white or blue in color.

Polyurethane - A versatile plastic foam insulation, usually yellow in color.

Pressure - A force encouraging flow by virtue of a difference in some condition between two areas.

Pressure pan - A device used to block a duct register, while measuring the static pressure behind it, during a blower door test.

Pressure Relief Valve - A safety component required on a boiler and water heater, designed to relieve excess pressure buildup in the tank.

Purlins - Framing members that sit on top of rafters, perpendicular to them, designed to spread support to roofing materials.

R-value - A measurement of thermal resistance.

Register - A grille covering a duct outlet.

Rafter - A beam that gives form and support to a roof.

Relative humidity - The percent of moisture absorbed in the air compared to the maximum amount possible. Air that is saturated has 100% relative humidity.

Resistance - The property of a material resisting the flow of electrical energy or heat energy.

Retrofit - An energy conservation measure that is applied to an existing building. Also means the action of improving the thermal performance or maintenance of a building.

Return air - Air circulating back to the furnace from the house, to be heated by the furnace and supplied to the rooms.

Rim joist - The outermost joist around the perimeter of the floor framing.

Rodent barrier - A covering attached to the bottom of a manufactured-home floor to exclude rodents and other pests and to prevent damage to the floor insulation.

Sash - A movable or stationary part of a window that frames a piece of glass.

Self-regulating heating cable - Heating cable which automatically adjusts power in response to ambient temperatures changes.

Sealant - Material used for sealing something so as to make it airtight or watertight. See also Caulking.

Sheathing - A structural sheeting, attached on top of the framing, underneath siding and roofing of a building.

Sheeting - Any building material used for covering a building surface.

Sill - The bottom of a window or door frame.

Sill pan - A metal or plastic pan installed on a window sill during window installation to trap water and divert it to outdoors.

Sling Psychrometer - A device holding two thermometers that is slung through the air to measure relative humidity.

Soffit - The underside of a roof overhang or a small lowered ceiling, as above cabinets or a bathtub.

Solar heat-gain coefficient (SHGC) - The ratio of solar heat gain through a window to incident solar heat. Includes both transmitted heat and absorbed and re-radiated heat.

Space conditioning - Heating, cooling, or ventilation of an indoor space.

Specification - A characteristic of a material. An installation instruction. A list of characteristics or instructions.

Stack effect - The draft established in a building from air infiltrating low and exfiltrating high.

Stop - A thin trim board for windows and doors to close against or slide against.

Strike plate - The metal plate attached to the door jamb that the latch inserts into upon closing.

Stucco - Plaster applied to the building's exterior walls.

Stud - A vertical framing member used to build a wall.

Subfloor - The sheathing over the floor joists and under the flooring.

Substrate - A layer of material to which another layer is applied.

Thermal barrier - A material that protects materials behind it from reaching 250° F during a fire. Dry-wall is a 15-minute thermal barrier.

Thermal boundary - A line or plane where insulation and air barrier(s) exist in order to resist thermal transmission and air leakage through or within a building shell.

Thermal break - A piece of relatively low conducting material between two high conducting materials.

Thermal bridging - Rapid heat conduction resulting from direct contact between very thermally conductive materials like metal and glass.

Thermal envelope - The basement walls, exterior walls, floor, roof and any other building element that enclose conditioned spaces.

Truss - A lightweight, rigid framework designed to be stronger than a solid beam of the same weight.

U-factor - The amount of heat that will flow through a square foot of building cross-section experiencing a temperature difference of 1° F.

U-value - See U-factor. An obsolete term for U-factor.

Unconditioned space - An area within the building shell that is not intentionally heated or cooled.

Underfloor - The underside of the first floor of a building, with its floor joists and the spaces between them.

Vapor barrier - A Class I vapor retarder that resists the flow of water vapor to less than 0.1 perm.

Vapor diffusion - The flow of water vapor through a solid material.

Vapor retarder - A material that resists the flow of water vapor to less than 1.0 perm.

Ventilation - The movement of air through an area for the purpose of removing moisture, air pollution, or unwanted heat.

Volt - The energy contained in each unit of charge in joules per coulomb.

Watt - A unit of electrical power equivalent to one joule per second or 3.4 BTUH.

Watt-hour - A unit of electrical energy equivalent to 3600 joules or 3.4 BTUs.

Weatherization - The process of reducing energy consumption and increasing comfort in buildings by improving energy efficiency of the building.

Water-resistant barrier - A material that prevents water from wetting the wall assembly.

Weatherstripping - Flexible gaskets, often mounted in rigid metal strips, for limiting air leakage.

Webbing - A reinforcing fabric used with mastics and coatings to prevent patches from cracking.

Weep holes - Holes drilled for the purpose of allowing water to drain out of an area in a building where it has collected.

Wet-bulb temperature - The temperature of a dampened thermometer of a sling psychrometer used to determine relative humidity, dew point, and enthalpy.

Window buck - A wood frame inserted into a window opening to frame and fasten the window to the structure.

Window frame - The sides, top, and sill of the window which forms a box around window sashes and other components.

Work scope - The summary of energy conservation measures, materials lists and labor estimates that is prepared by an energy auditor as part of an energy audit.

Worst-case depressurization test - A safety test, performed by specific procedures, designed to assess the probability of chimney backdrafting.

Zone - A room or portion of a building separated from other rooms by an air barrier—not usually an effective air barrier.

APPENDIX 5: ACRONYMS

ACCA - Air Conditioning Contractors of America

ACH - Air Changes per Hour

ANSI - American National Standards Institute

ASHRAE - American Society of Heating, Refrigerating and Air-Conditioning Engineers

ASTM - American Society for Testing Materials

AWG - American Wire Gauge

BPI - Building Performance Institute

BTU - British Thermal Unit

CAZ - Combustion Appliance Zone

CFM - Cubic Feet per Minute

CFR - Code of Federal Regulations

CPD - Certified Products Database

CO - Carbon Monoxide

CPSC - Consumer Products Safety Commission

DOE - U.S. Department of Energy

DHW - Domestic Hot Water

DP - Difference in Pressure

EPA - U.S. Environment Protection Agency

ERV - Energy Recovery Ventilator

FTC - Federal Trade Commission

GFCI - Ground-Fault Circuit Interrupter

HRV - Heat Recovery Ventilator

HUD - Housing and Urban Development

HVAC - Heating, Ventilating, and Air-Conditioning

ICAT - Insulation Contact Air-Tight

IEC - International Electrical Code

IECC - International Energy Conservation Code

IFGC - International Fuel Gas Code

IMC - International Mechanical Code

IRC - International Residential Code

IWC - Inches of Water Column

kW - Kilowatt

kWh - Kilowatt-hour

MSDS - Material Safety Data Sheet

NAECA - National Appliance Energy Conservation Act

NFA - Net Free Area

NFPA - National Fire Protection Agency

NFRC - National Fenestration Rating Council

NIOSH - National Institute for Occupational Safety and Health

NM - Non-metallic

OSB - Oriented Strand Board

OSHA - U.S. Occupational Safety and Health Administration

PTCS - Performance Tested Comfort Systems

SHGC - Solar Heat-Gain Coefficient

SPFA - Spray Polyurethane Foam Alliance

UL - Underwriters Laboratory

UV - Ultraviolet

WRB - Water Resistive Barrier

WRT - With Reference To

APPENDIX 6: STATE BUILDING CODE DIVISIONS

Idaho Building Code Division

http://dbs.idaho.gov/Codes/faq.html

Montana Building Code Division
http://b.bsd.dli.mt.gov/bc/bld_prm.asp

Oregon Building Code Division

http://www.cbs.state.or.us/bcd/programs/online_codes.html

Washington Building Code Division

https://fortress.wa.gov/ga/apps/SBCC/