Department of Energy

Bonneville Power Administration
P.O. Box 3621
Portland, Oregon 97208-3621

FREEDOM OF INFORMATION ACT PROGRAM

April 30, 2015

In reply refer to: FOIA BPA 2015-00508-F

Larry G. Johnson
(b)(6)

Mr. Johnson:

This communication is a partial response to your request to the Bonneville Power Administration (BPA) for records under the Freedom of Information Act (FOIA), (5 U.S.C. § 552). Your request was received on January 13, 2015, and was acknowledged on January 13, 2015.

You requested:

"...all documents, electronic or otherwise, draft and final, including e-mail correspondence, presentations, correspondence, draft agreements, and notes related to...the design, purpose, need, scope, studies and objections to or concerns about the project presently referred to as Energize Eastside (Project as proposed by Puget Sound Energy [(PSE)]. These requests also extend to a project that was/is an immediate precursor to the Project, proposed by PSE to the Columbia Grid consortium, and referred to by PSE as "Sammamish-Lakeside-Talbot Hill" [(SLTH)]. [SLTH is] a regional grid reinforcement project which involved/involves the [Project's] subsequently designated segments "C-E-J-M"[,] and [which] propos[ed] the same kind of upgrade in the existing 115kV lines to 230kV[,] with an upgraded or new transformer at Lakeside.

Documents requested include, but are not limited to, those documents relating to any proposed or actual cost sharing by or between utilities associated with or otherwise contacted concerning the Project and/or [SLTH], including by and between Seattle City Light [(SCL)], PSE and BPA, including draft and final agreements, e-mail correspondence, and invoices.

Documents requested also include those related to the Project and/or [SLTH] which were transmitted between or among SCL and any other agencies, energy [companies] and other companies, and/or non-profit consortia, including, but not limited to, BPA, PSE, other Seattle City departments, ColumbiaGrid, FLRC, and the Western Electricity Coordinating Council. Further, all documents, electronic or otherwise, draft and final, including e-mail correspondence, are requested concerning any and all communications between PSE and SCL with respect to any

use or sharing of SCL's rights of way and/or easements and/or power lines which are located on the Eastside.

Please include in your search and production of these documents any and all load and/or reliability forecasts for the future electricity needs of the Eastside[,] or any portion of it[,] in your possession, regardless of by whom made or for what purpose.

Please consider the relevant time period for these requests to be from 2008 to the present."

Response:

An ongoing search of the paper and electronic records in BPA's Transmission Sales and Transmission Project Management departments is being conducted. In an effort to both accommodate the ongoing gathering and review of the volume of responsive records, and provide those records expediently, we are releasing records to you in partial increments. A first partial records release accompanies this communication.

BPA's response effort for your FOIA request is ongoing. Because of the level of complexity of the FOIA reprocessing effort and the volume of responsive records, we are extending the target date for completion of your request to June 30, 2015.

We appreciate the opportunity to assist you. If you have any questions about this letter, please contact James King, CorSource Technology Group, Inc., assigned to Bonneville Power Administration, at 503-230-7621.

Sincerely,

C. M. Frost
Freedom of Information/Privacy Act Officer

Enclosure: Responsive documents

Contract No. 11TX-15450

MEMORANUDUM OF AGREEMENT

executed by the

UNITED STATES OF AMERICA

DEPARTMENT OF ENERGY

acting by and through the

BONNEVILLE POWER ADMINISTRATION

and

THE CITY OF SEATTLE

acting by and through its

CITY LIGHT DEPARTMENT

and

PUGET SOUND ENERGY, INC.

(Relating to the Preferred Puget Sound Area Plan of Service Projects and Cost Allocation)

This MEMORANDUM OF AGREEMENT (MOA) is executed by the UNITED STATES OF AMERICA, Department of Energy, acting by and through the BONNEVILLE POWER ADMINISTRATION (BPA), THE CITY OF SEATTLE, acting by and through its CITY LIGHT DEPARTMENT (Seattle City Light), and PUGET SOUND ENERGY INC. (Puget). BPA, Seattle City Light, and Puget are sometimes referred to individually as "Party" and collectively as "Parties".

WHEREAS, BPA owns and is responsible for the reliable operation of the Federal Columbia River Transmission System (FCRTS),

WHEREAS, Seattle City Light and Puget each own and operate electric systems that are interconnected with the FCRTS in the Puget Sound Area and electric power is delivered within those electric systems, and to or from them by BPA over the FCRTS,

WHEREAS, the Puget Sound Area experiences periods of transmission congestion that may require mitigation to maintain reliable operation of the Puget Sound Area Interconnection, including in some cases, curtailments of firm transmission service,

WHEREAS, as of February 2011, the Parties entered into Contract No. 11TX-15290, "Temporary Operational Support Program Agreement," that provides for voluntary changes in planned generation, including an increase in Puget Sound Area generation, as temporary and short-term measures for relieving forecasted transmission congestion conditions that are expected to adversely affect the reliable operation of the Puget Sound Area Interconnection,

WHEREAS, representatives from each of the Parties and other entities participated in regional studies to develop a long term plan, and implement a range of physical improvements to preserve the reliable operation of the Puget Sound Area interconnection, and reduce the need to curtail firm transmission service,

WHEREAS, the Parties have identified the projects described herein that, when taken as a whole, are expected to preserve the reliable operation of the Puget Sound Area Interconnection, and reduce the need to curtail firm transmission service; and it is in their individual and collective interests to continue to support the efforts needed to carry out these projects, and

WHEREAS, the transmission congestion affecting the Puget Sound Area interconnection is a shared problem, and the projects and cost sharing arrangements provided herein are appropriate.

NOW THEREFORE, in consideration of the mutual obligations and undertakings herein, the sufficiency of which is acknowledged, the Parties agree as follows:

1. DEFINITIONS

(a) "Bothell to SnoKing Reconductor Project" means the project identified in the Preferred Plan of Service in which Seattle City Light will reconductor the existing Bothell to SnoKing No. 1 and No. 2 230 kV lines with high-temperature conductor.

(b) "BPA Preferred Plan Projects" means, collectively, the Covington 500 kV Transformer Addition Project and the Northern Intertie Remedial Action Scheme ("RAS") Improvement Project.

(c) "Broad Street Inductor Project" means the project identified in the Preferred Plan of Service in which Seattle City Light will add series inductors (up to 10 ohm) to the Massachusetts-Broad Street 115 kV line.

(d) "ColumbiaGrid" means the Washington non-profit membership corporation formed to improve the operational efficiency, reliability, and planned expansion of the Pacific Northwest transmission grid, the

eight members of which, as of the Effective Date, are Avista Corporation; BPA; Public Utility District No. 1 of Chelan County, Washington; Public Utility District No. 2 of Grant County, Washington; Puget; Seattle City Light; Public Utility District No. 1 of Snohomish County, Washington; and Tacoma Power.

(e) "Covington 500 kV Transformer Addition Project" means the project identified in the Preferred Plan of Service in which BPA will install a third 500–230 kV transformer at the BPA Covington Substation.

(f) "Delridge to Duwamish Reconductor Project" means the project identified in the Preferred Plan of Service in which Seattle City Light will reconductor the existing Delridge to Duwamish 230 kV line with high-temperature conductor.

(g) "Lakeside 230 kV Transformer Addition Project" means the project identified in the Preferred Plan of Service in which Puget will install a 230–115 kV transformer at the Puget Lakeside Substation.

(h) "Maple Valley to SnoKing Reconductor Project" means the project identified in the Preferred Plan of Service in which Seattle City Light will reconductor the existing Maple Valley to SnoKing 230 kV line with high-temperature conductor.

(i) "North Downtown Inductor Project" means the project identified in the Preferred Plan of Service in which Seattle City Light will add series inductors (up to 10 ohm) to the East Pine-Broad Street line as part of Seattle City Light's North Downtown Substation Project.

(j) "Northern Intertie RAS Improvement Project" means the project identified in the Preferred Plan of Service in which BPA will install new software for and re-wire electrical protection devices on the Northern Intertie RAS.

(k) "Northern Intertie RAS" means the existing BPA pre-programmed set of automatic operating steps that are designed to protect the regional high voltage electric grid in the event of a loss of one of the two Custer-Monroe 500 kV lines.

(l) "Preferred Plan of Service" means the "Updated Recommended Transmission Expansion Plan for the Puget Sound Area to Support Winter South-to-North Transfers" approved by ColumbiaGrid on October 28, 2011, a copy of which is attached as Exhibit A to this MOA.

(m) "Preferred Plan Projects" means, collectively, the BPA Preferred Plan Projects, the Puget Preferred Plan Projects, and the Seattle City Light Preferred Plan Projects.

(n) "Puget Preferred Plan Projects" means the Sammamish to Lakeside to Talbot Rebuild Project and the Lakeside 230 kV Transformer Addition Project.

(o) "Sammamish to Lakeside to Talbot Rebuild Project" means the project identified in the Preferred Plan of Service in which Puget will upgrade Puget's existing Sammamish to Lakeside to Talbot 115 kV lines to 230 kV operation using Puget's existing Sammamish to Lakeside to Talbot utility corridor.

(p) "Seattle City Light Preferred Plan Projects" means the Bothell to SnoKing Reconductor Project, the Broad Street Inductor Project, the North Downtown Inductor Project, and the Delridge to Duwamish Reconductor Project.

2. TERM

The term of this MOA shall be effective on the date of execution by all Parties (Effective Date) and shall continue until the earliest to occur of the following: (i) the date of completion of the last of the Preferred Plan Projects; (ii) a Party terminates this MOA pursuant to section 5(c) of this MOA; or (iii) December 31, 2020.

3. PREFERRED PLAN OF SERVICE PROJECTED PROJECT COMPLETION SCHEDULE AND COST

(a) **BPA Preferred Plan Projects**. Each Party acknowledges that, as of the Effective Date, the projected project completions schedule and capital costs of the BPA Preferred Plan Projects are as follows:

BPA Preferred Plan Project	Projected Completion	Projected Capital Cost
1. Covington 500 kV Transformer Addition Project	2018	$56.2 million
2. Northern Intertie RAS Improvement Project	2014	$4.0 million

(b) **Puget Preferred Plan Projects.** Each Party acknowledges that, as of the Effective Date, the projected project completions schedule and capital costs of the Puget Preferred Plan Projects are as follows:

Puget Preferred Plan Project	Projected Completion	Projected Capital Cost
1. Sammamish to Lakeside to Talbot Rebuild Project	2017	$45.0 million (single circuit) or $41.3 million (double circuit)
2. Lakeside 230 kV Transformer Addition Project	2017	$22.0 million

(c) **Seattle City Light Preferred Plan Projects.** Each Party acknowledges that, as of the Effective Date, the projected project completions schedule and capital costs of the Seattle City Light Preferred Plan Projects are as follows:

Seattle City Light Preferred Plan Project	Projected Completion	Projected Capital Cost
1. Bothell to SnoKing Reconductor Project	2017	$2.5 million
2. Broad Street Inductor Project	2017	$7.3 million*
3. North Downtown Inductor Project	2017	$4.4 million*
4. Delridge to Duwamish Reconductor Project	2016	$1.9 million

(d) **Preferred Plan Project Not Planned for Construction Based On the Construction of the Puget Preferred Plan Projects.** Each Party acknowledges that, the construction of the Puget Preferred Plan Projects negates the need for the construction of the Maple Valley to

* The projected capital costs of the Broad Street Inductor Project and the North Downtown Inductor Project do not reflect any projected costs for land acquisition. As of the Effective Date, the Parties acknowledge that Seattle City Light may have to acquire land to accomplish the Broad Street Inductor Project, and the actual capital costs of the Broad Street Inductor Project will, if necessary, reflect the actual costs of land acquisition for such project. As of the Effective Date, the Parties do not anticipate that the North Downtown Inductor Project will require Seattle City Light to acquire any land.

SnoKing Reconductor Project. Each Party acknowledges that, as of the Effective Date, the projected project completions schedule and capital costs of the Maple Valley to SnoKing Reconductor Project are as follows:

Preferred Plan Project	Projected Completion	Projected Capital Cost
Maple Valley to SnoKing Reconductor Project	N/A	$16.1 million

4. PRELIMINARY CAPITAL COST ALLOCATION

As of the Effective Date of this MOA, the Parties agree to share in the capital costs of Preferred Plan Projects as follows:

(a) **BPA Preferred Plan Projects**. BPA shall pay the entire actual capital cost of each of (i) the Covington 500 kV Transformer Addition Project and (ii) the Northern Intertie RAS Improvement Project

(b) **Seattle City Light Preferred Plan Projects.** BPA, Puget, and Seattle City Light shall each pay one-third of the total actual capital cost of each of (i) the Bothell to SnoKing Reconductor Project; (ii) the Delridge to Duwamish Reconductor Project; (iii) the Broad Street Inductor Project; and (iv) the North Downtown Inductor Project.

(c) **Puget Preferred Plan Projects.** BPA and Seattle City Light shall each pay to Puget an amount equal to one-third of the adjusted projected capital cost of the Maple Valley to SnoKing Reconductor Project, which adjusted projected capital cost shall be determined as provided in the following table:

Projected Capital Cost of the Maple Valley to SnoKing Reconductor Project	=	$16.1 million * Cost Differences in Reconductor Projects

where:

Cost Differences in Reconductor Projects	=	the quotient of (i) the sum of the actual capital costs of the Delridge to Duwamish Reconductor Project and Bothell to SnoKing Reconductor Project and

(ii) the sum of the projected capital costs of the Delridge to Duwamish Reconductor Project and Bothell to SnoKing Reconductor Project identified in section 3(c) above (i.e., $4.4 million)

5. FINAL CAPITAL COST ALLOCATION AND OPTION OF ELECTION TO CANCEL

(a) The allocations identified in section 4 are based on preliminary planning capital cost projections. The final capital cost allocation for the Seattle City Light Preferred Plan Projects shall be based on actual design and construction capital costs for each of the Seattle City Light Preferred Plan Projects, and the final capital cost allocation for the Puget Preferred Plan Projects shall be in accordance with the formula proscribed in section 4(a) above. The Parties shall review such actual design and construction capital costs and schedules and shall agree in writing to the final capital cost allocation.

(b) Each Party reserves the right to cancel any Preferred Plan Project for which such Party is the sponsor if such Party determines that

(i) the actual capital cost of such Preferred Plan Project is likely to exceed the projected capital cost of such Preferred Plan Project by a factor that is equal to or in excess of thirty percent (30%), or

(ii) the projected in-service date of the Preferred Plan Project will be more than twenty-four (24) months later than the projected completion date identified in section 3 above for such Preferred Plan Project.

If a Party elects to cancel a Preferred Plan Project for which such Party is a sponsor under this section 5(b), such Party shall provide written notice to such other Parties within five (5) days of such election. Within a reasonable period of time after receipt of such written notice, representatives of the Parties shall convene and identify alternative projects that the Parties expect will preserve the reliable operation of the Puget Sound Area Interconnection and reduce the need to curtail firm transmission service in a manner similar to the project cancelled pursuant to section 5(b). If the Parties cannot agree in good faith upon an alternative project to replace a project cancelled pursuant to section 5(b) within a reasonable period following receipt of written notice of

such termination, then any Party may terminate this MOA upon 90 days' written notice to the other Parties.

6. RESPONSIBILITY FOR ALL OTHER COSTS

(a) Each Party shall be solely responsible for the Preferred Plan Project for which such Party is the sponsor, less the contributions from the other Parties as provided in section 4. This MOA only affects the cost sharing for the Preferred Plan Projects.

(b) Each Party shall own the assets for the Preferred Plan Project for which such Party is the sponsor and shall be solely responsible for the operation and maintenance costs of such assets. Each Party shall be entitled to any capacity increases to its transmission system that results from any assets installed pursuant to this MOA.

(c) If any Party enhances a Preferred Plan Project after completion of such Preferred Plan Project to meet such Party's needs, the cost of such future enhancements shall be borne solely by such Party. Each Party shall attempt in good faith to coordinate with the other Parties with respect to any future enhancements to a Preferred Plan Project to minimize or eliminate any impact to the interconnected electric systems of such other Parties.

7. PAYMENT SCHEDULE

Payments will be made at the completion of individual projects. The Parties shall agree in writing to the method and schedule for the cost share contributions to be made under this MOA.

8. NATIONAL ENVIRONMENTAL POLICY ACT ASSESSMENT

To the extent that BPA's financial contributions under this MOA are determined to trigger the need for analysis of projects under the National Environmental Policy Act, the Parties shall coordinate such assessment.

9. JOINT COMMUNICATIONS

The Parties shall coordinate joint communications regarding presentations of the preferred plan of service to the public.

10. GENERAL PROVISIONS

(a) This MOA, including documents expressly incorporated by reference, constitutes the entire agreement between the Parties. It supersedes all previous communications, representations, or contracts, either written or oral, which purport to describe or embody the subject matter of this MOA.

(b) No amendment of this MOA shall be of any force or effect unless set forth in a written instrument signed by authorized representatives of each Party.

(c) This MOA is made and entered into for the sole benefit of the Parties, and the Parties intend that no other person or entity shall be a direct or indirect beneficiary of this MOA.

(d) This MOA shall be interpreted consistent with and governed by federal law.

(e) In the event that any provision of this MOA is determined to be invalid or unenforceable for any reason, in whole or part, the remaining provisions of this MOA shall be unaffected thereby and shall remain in full force and effect to the fullest extent permitted by law, and such invalid or unenforceable provision shall be replaced by the Parties with a provision that is valid and enforceable and that comes closest to expressing the Parties' intention with respect to such invalid or unenforceable provision.

(f) Each Party shall be solely responsible for and shall pay its own costs and expenses incurred by it in connection with the negotiation of this MOA.

(g) Whenever this MOA requires or provides that (i) a notice be given by a Party to any other Party or (ii) a Party's action requires the approval or consent of any other Party, such notice, consent or approval shall be given in writing and shall be given in accordance with the provisions of Exhibit B to this MOA.

(h) This MOA is binding on any successors and assigns of the Parties. No Party may otherwise transfer or assign this MOA, in whole or in part, without the other Parties' written consent. Such consent shall not be unreasonably withheld.

(i) Nothing contained in this MOA shall be construed as creating a corporation, company, partnership, association, joint venture or other entity, nor shall anything contained in this MOA be construed as

creating or requiring any fiduciary relationship between the Parties. No Party shall be responsible hereunder for the acts or omissions of any other Party. Nothing herein shall preclude (i) a Party from taking any action (or having its affiliates take any action) with respect to any other transmission project, including any such project that may compete with the projects provided herein, or (ii) the Parties jointly from entering into MOAs with third parties for the joint development, construction, ownership or operation of any project or for the provision of transmission capacity from such project.

(j) Other than the obligation to pay amounts due under Section 4, in no event shall any Party be liable to any other Party under any provision of this MOA for any losses, damages, costs or expenses for any direct, special, indirect, incidental, consequential, or punitive damages, including but not limited to loss of profit or revenue, whether based in whole or in part in contract or in tort, including negligence, strict liability, or any other theory of liability; provided, however, that damages for which a Party may be liable to any other Party under another agreement will not be considered to be special, indirect, incidental, or consequential damages hereunder.

(k) The Parties shall not be in breach of their respective obligations to the extent the failure to fulfill any obligation is due to an Uncontrollable Force. "Uncontrollable Force" means an event beyond the reasonable control of, and without the fault or negligence of, the Party claiming the Uncontrollable Force, that prevents that Party from performing its contractual obligations under this MOA and which, by exercise of that party's reasonable care, diligence and foresight, such Party was unable to avoid. Uncontrollable Forces include, but are not limited to:

(1) strikes or work stoppage;

(2) floods, earthquakes, or other natural disasters; terrorist acts; and

(3) final orders or injunctions issued by a court or regulatory body having competent subject matter jurisdiction which the Party claiming the Uncontrollable Force, after diligent efforts, was unable to have stayed, suspended, or set aside pending review by a court of competent subject matter jurisdiction.

Neither the unavailability of funds or financing, nor conditions of national or local economies or markets shall be considered an Uncontrollable Force. The economic hardship of a Party shall not

constitute an Uncontrollable Force. Nothing contained in this provision shall be construed to require any Party to settle any strike or labor dispute in which it may be involved.

If an Uncontrollable Force prevents a Party from performing any of its obligations under this MOA, such party shall: (1) immediately notify the other Parties of such Uncontrollable Force by any means practicable and confirm such notice in writing as soon as reasonably practicable; (2) use its best efforts to mitigate the effects of such Uncontrollable Force, remedy its inability to perform, and resume full performance of its obligation hereunder as soon as reasonably practicable; (3) keep the other Parties apprised of such efforts on an ongoing basis; and (4) provide written notice of the resumption of performance. Written notices sent under this section 10(k) must comply with Exhibit B, Notices and Contact Information.

11. WAIVER

No waiver of any provision or breach of this MOA shall be effective unless such waiver is in writing and signed by the waiving Party, and any such waiver shall not be deemed a waiver of any other provision of this MOA or any other breach of this MOA.

12. SIGNATURE

The Parties have caused this MOA to be executed as of the latest date all Parties have signed this MOA.

CITY OF SEATTLE CITY LIGHT DEPARTMENT		UNITED STATES OF AMERICA Department of Energy Bonneville Power Administration	
By:	Jorge Carrasco	By:	Harder Juj
Name: *(Print/ Type)*	Jorge Carrasco	Name: *(Print/ Type)*	Harder Juj
Title:	Superintendent	Title:	VP, Planning + Asset Mgmt.
Date:	1/31/12	Date:	1/31/12

PUGET SOUND ENERGY, INC.

By: Susan McLain

Name: Susan McLain
(Print/ Type)

Title: Senior Vice President Delivery Operations

Date: 1/31/12

EXHIBIT A
PREFERRED PLAN OF SERVICE

EXHIBIT B
NOTICES

Any notice required under this MOA shall be in writing and shall be delivered in person; or with proof of receipt by a nationally recognized delivery service or by United States Certified Mail. Notices are effective when received. Either Party may change the name or address for receipt of notice by providing notice of such change. The Parties shall deliver notices to the following person and address:

If to Seattle City Light:

Attention:
Phone:
Fax:
Email:

If by First Class Mail:

City of Seattle, City Light Department
(Customer Address)
(Customer City, State, Zip)

If by Overnight Delivery Service:
City of Seattle, City Light Department
(Customer Address)
(Customer City, State, Zip)

If to BPA:

Attention:
Phone:
Fax:
Email:

If by First Class Mail:

Bonneville Power Administration
P.O. Box 61409
Vancouver, WA 98666-1409

If by Overnight Delivery Service:
Bonneville Power Administration – TSE/TPP-2
7500 NE 41st Street – Suite 130
Vancouver, WA 98662

If to the Puget:

Attention:
Phone:
Fax:
Email:

If by First Class Mail:

Puget Sound Energy, Inc.
P.O. Box 97034
Bellevue, WA 98009-9734

If by Overnight Delivery Service:
Puget Sound Energy, Inc.
10885 N.E. 4th Street, Suite 1100
Bellevue, WA 98004-5591

EXHIBIT A
PREFERRED PLAN OF SERVICE

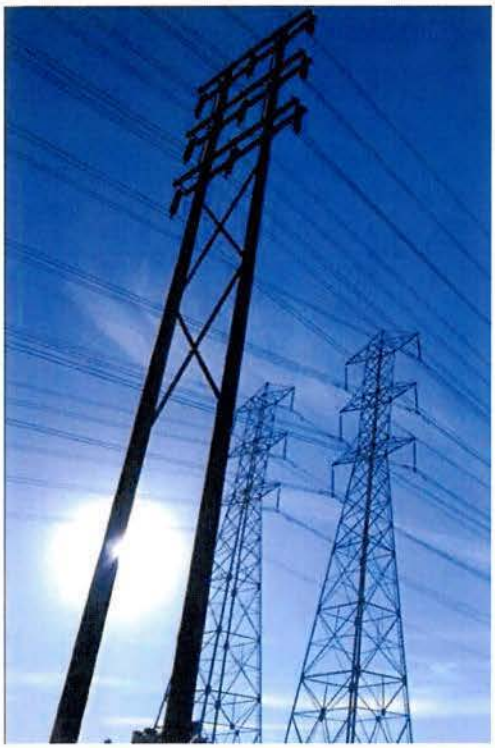

Updated Recommended Transmission Expansion Plan for the Puget Sound Area to Support Winter South-to-North Transfers

ColumbiaGrid

Puget Sound Area Study Team

Bonneville Power Administration, Puget Sound Energy, Seattle City Light, Snohomish County PUD, Tacoma Power, Powerex

Provisional Approval by the Study Team on April 25, 2011

Final Approval by the Study Team on October 28, 2011

Introduction and Conclusions

In October of 2010, the Puget Sound Area Study Team issued a report entitled "Transmission Expansion Plan for the Puget Sound Area." The report is available via the ColumbiaGrid website. The report details a transmission plan for the Puget Sound region that would, as a basic requirement, provides for reliable system performance while significantly improving the ability of the transmission grid to support power transfers between the Northwest and British Columbia. Since the release of the original report, the following changes have occurred that have led to the need for the Puget Sound Area Study Team to revise their transmission plan:

1) ***Additional scenarios*** – The Puget Sound area utilities have been meeting regularly since the publication of the original report in October 2010 and have developed several additional scenarios to be studied (e.g., the addition of a new Broad Street-Massachusetts 115 kV underground cable). In response, the study team repeated their prior analysis for the critical winter south-to-north condition for the new scenarios. The results of this analysis are shown in the table provided in Appendix A.

2) ***Increased likelihood that Puget Sound Energy will move forward with Sammamish-Lakeside-Talbot project*** – Since the development of the original plan, Puget Sound Energy has further developed their plan to rebuild two 115 kV lines to 230 kV (Sammamish-Lakeside-Talbot #1 and #2) and provide new 230/115 kV transformation at their Lakeside Substation. Although both lines will be rebuilt, only one of the lines may be initially energized at 230 kV. As stated in the prior report, this facility addition can delay the need to reconductor the Maple Valley-SnoKing 230 kV lines beyond the ten-year transmission planning horizon.

   The study team decided that since Puget Sound Energy is moving forward with this plan, the Sammamish-Lakeside-Talbot project should be listed as the proposed project in the plan instead of the Maple Valley-SnoKing reconductor. This project will give Puget Sound Energy the ability to provide necessary load support at Lakeside which cannot be achieved with the Maple Valley-SnoKing reconductor project, while providing similar Transmission Curtailment Risk Measure (TCRM) benefits as the Maple Valley-SnoKing reconductor project. A downside of the Sammamish-Lakeside-Talbot project is that its south-to-north Total Transfer Capability (TTC) is lower as compared to the Maple Valley-SnoKing reconductor. However, the Sammamish-Lakeside-Talbot project has additional benefits over the Maple Valley-SnoKing reconductor project in that it provides an additional 230 kV transmission path through the Puget Sound area and makes it feasible to reconductor rather than rebuild the Bothell-SnoKing 230 kV lines.

3) ***Increased likelihood that Seattle City Light will move forward with their North Downtown Substation Project*** – Since the development of the plan, Seattle City Light has indicated that plans to add a new North Downtown Substation have become more likely. The final plan is still being developed by SCL. The option studied includes a new underground cable (North Downtown-Massachusetts 230 kV), a new 115 kV line between North Downtown and Canal, and two 230/115 kV transformers at the proposed substation (see the following Figure One). This project was studied in the prior plan and, as identified previously, a third set of series inductors will be required on the new Canal-North Downtown 115 kV line with the addition of the North Downtown Substation. The plan for the system without, or prior to, the addition of the North Downtown Substation remains the same (adding series inductors on the two 115 kV underground cables). There is not a significant impact on the plan with or without the North Downtown Substation project as long as the project includes a third set of series inductors on the new North Downtown-Canal 115 kV line.

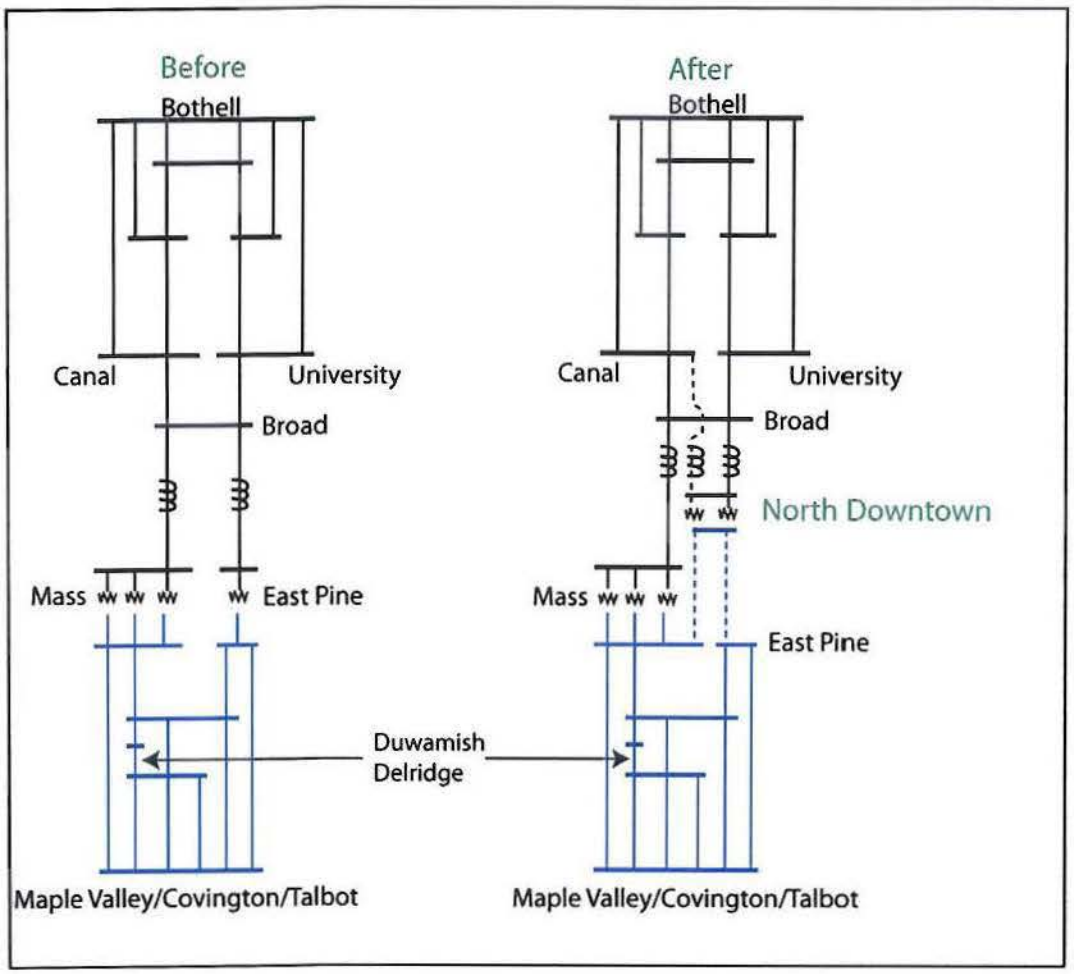

Figure One: One-Line Diagram with the proposed locations of the series inductor additions, before and after the Seattle City Light North Downtown Substation Project.

4) ***Seattle area line rating increases*** – Several key transmission lines in the region have been rerated to a higher capability. In some cases the new ratings provide a 77% increase over the ratings that were utilized in the original study. This has enabled the study team to reduce the size of the series inductors (from 26 ohms to 6 ohms) that were proposed for the Seattle City Light 115 kV transmission lines and cables. The smaller inductors lead to more power flowing through the Seattle City Light system resulting in the need to include an additional facility reconductor in the plan; the Duwamish-Delridge 230 kV line. The cost of this additional reconductor is estimated to be relatively low ($1.6 million). This additional cost is projected to be partially offset by the savings achieved by the installation of smaller inductors. The smaller inductors also reduce the need to add shunt capacitors to offset the reactive losses from the larger sized inductors.

5) ***Seattle City Light Update to TPS Settings*** - Seattle City Light has recently updated the TPS settings which have resulted in operational changes that preclude it from being used as a project in this study to reduce TCRM and increase TTC levels on the northern intertie. All results that use the previous scheme have not been included in this report.

As a result of the above changes, the plan to support south-to-north transfers has been revised as specified in this report. Additional transmission facilities, such as a second Portal Way 230/115 kV transformer, will likely be necessary to support north-to-south transfers. These additional facilities will be further analyzed in subsequent studies.

Overview of Revised Plan

As a result of the above changes, the Transmission Expansion Plan for the Puget Sound Area was revised and the new plan is shown in the following Figure Two:

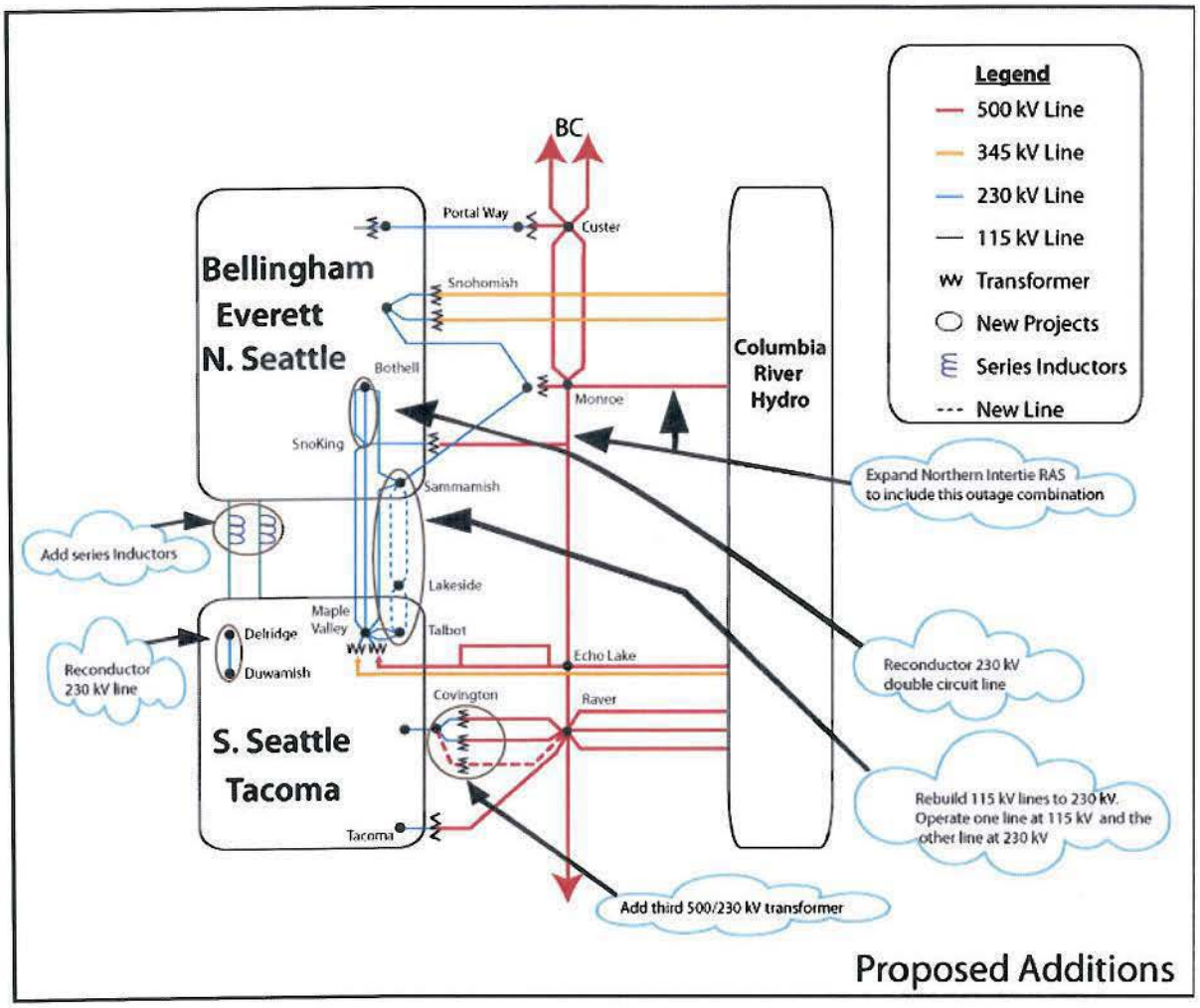

Figure Two: Revised Puget Sound Area Transmission Expansion Plan for Supporting South-to-North Transfers

Projects included in the Puget Sound Area Transmission Expansion Plan to support south-to-north transfers are:

- Reconductor the double circuit Bothell-SnoKing 230 kV lines with high temperature conductor
- Expand the Northern Intertie RAS
- Add a third Covington 500/230 kV transformer
- Reconductor the Delridge-Duwamish 230 kV line
- Add series inductors to the Massachusetts-Union-Broad and East Pine-Broad 115 kV lines in the downtown Seattle system. The final inductor size is under study and may vary from the 6 ohms specified in this report. Each line may have a different inductor size to optimize the system.
- Rebuild both the Sammamish-Lakeside-Talbot 115 kV lines to 230 kV. Energize one line at 230 kV and the other at 115 kV.

The cost estimates for the project in the preferred plan are shown in the following table. It should be noted that portions of the projects may be planned for local utility service and may not be necessary to accomplish the transfer capability goals of this study.

PSAST Preferred South-to-North Plan Cost Estimate	
	Cost Estimate (M)
Reconductor Bothell-SnoKing 230kV #1 & #2 with high temperature conductor	$3
Extend the Northern Intertie RAS to trip for the combined outage of the Chief Joseph-Monroe and Monroe-SnoKing-Echo Lake 500 kV lines	$3
Add a third Covington 500/230 kV transformer, a 500 kV terminal at Raver for the third Raver-Covington 500 kV line, and a 500 kV Bus at Covington	$60
Reconductor Delridge - Duwamish 230 kV Line with high temperature conductor	$2
6 ohm inductors on the two 115 kV cables out of SCL's Broad Street Substation	$13
Lakeside 230/115 kV transformer, rebuild both 115 kV Sammamish – Talbot lines to 230 kV energizing one line at 230 kV	$65
Total Preferred Projects	$146

* The majority of these estimates are preliminary estimates. More detailed estimates will be developed by the Puget Sound Area utilities.

Next Steps

Now that the overall south-to-north plan is complete, the individual transmission owners need to identify the parties responsible for each of the projects and agree on the cost allocation for the projects. After this has been completed, detailed feasibility studies, cost estimates, project timing, and schedules will be completed. In addition, the following project specific studies will be completed by the Puget Sound Area Study Team:

- North-to-South transfer conditions will be studied to determine the effect that the new preferred plan has on transfer capability and to determine if any additional projects are needed.
- Series Inductor Project: Studies need to be completed to determine the proper size for the series inductors, the impact on north-to-south transfers, and the preferred switching arrangement.
- Determine how long the proposed plan will last. The PSAST will grow the Northwest loads in the current 2020 base case to 2025 and 2030 load levels. The additional load will be served by eastern resources. TCRM and TTC values will be calculated to determine whether they may degrade over time.
- Northern Intertie RAS Expansion Project: The Puget Sound Area Study Team will be available to assist BPA and BC Hydro with any additional studies necessary to implement this RAS expansion.
- Covington Transformer Project: Additional studies will be completed by BPA, to further analyze alternative locations for this transformer addition, the need for a 500 kV switchyard at Covington, potential operational solutions, potential remedial action schemes, the size of the transformer, the impedance of the transformer, and the preferred connection to the 230 kV bus. The BPA studies will be coordinated with area utilities through the Puget Sound Area Study Team.

While the projects identified in this report improve the transfer capability through the Puget Sound Area, there remain curtailment risks for firm transfers during outage conditions (N-1-X). Consequently, the Puget Sound Area Study Team will continue to investigate cost effective ways to reduce the risk of firm curtailments.

Study Results

New winter south-to-north studies were completed for a variety of scenarios and the detailed study results are provided in Appendix A. The system performance for each scenario was compared using the following two measures in addition to cost and permitting feasibility:

1) ***Transmission Curtailment Risk Measure (TCRM):*** TCRM is a measure of the likelihood of experiencing curtailments of transfers between the Northwest and British Columbia. The higher the TCRM value the greater the exposure to curtailments. The TCRM analysis

includes the cases with all facilities in service as well as with any single facility out of service. A detailed description of the TCRM methodology is provided in the original report. In the original report, winter and summer conditions for both north-to-south and south-to-north transfers were studied. For this update, only winter conditions with south-to-north transfers were studied as that is the critical system state for the alternatives presented in this report.

2) ***Total Transfer Capability (TTC):*** The TTC (thermal only) of the Westside Northern Intertie (WSNI) was calculated for each of the options in the traditional way, with all lines in service. Only the winter south-to-north condition was studied, with 680 MW of generation operating in the Puget Sound Area. The specific generation unit assumptions are as described in Appendix J of the original report. Puget Sound Area generation during winter peak is between 950 MW and 1550 MW 80% of the time (when load has been greater than 6000MW along with temperature below 32 degrees F). With higher levels of Puget Sound Area generation, the TTC numbers shown in the tables would likely increase.

The major issues addressed in this study are the impacts of the various alternatives on the 115 kV system in the Seattle area, and the impacts of the various alternatives on the 230 kV system between the Maple Valley and SnoKing areas. In all cases, the other major projects as described in the original report are modeled, which include the Northern Intertie RAS expansion, third Covington transformer, and second Portal Way transformer. In addition, the Bothell-SnoKing rebuild project was included in most scenarios although sensitivity studies were conducted for the reconductor option which ended up being the preferred option. Provided below is a discussion of each of the major issues addressed by the study team and their conclusions.

1) 26 ohm versus 6 ohm series inductors

Table 1: Selected TCRM and TTC Results, 26 ohm inductors vs. 6 ohm inductors

Study #	Series Inductors on SCL's 115 kV Cables- 26 ohms	Series Inductors on SCL's 115 kV Cables- 6 ohms	Maple Valley-SnoKing High Temp	PSE's Sammamish - Lakeside - Talbot 115kV to 230kV Upgrade Project (Two Lines Operated at 230 kV)	Total TCRM - Without TCRM Lines Outside of the Puget Sound Area	Winter South North WSNI Thermal TTC at 680 MW Puget Sound Generation
3	X		X		10,304	2,270
4		X	X		8,433	2,297
17	X			X	10,460	1,773
18		X		X	8,666	2,038

With the changes in 115 kV line ratings, the Seattle 115 kV system is capable of accommodating greater flows. As a result, using a series inductor impedance greater than 6 ohms is no longer necessary to reduce the loadings on the Seattle 115 kV system. In fact, the TCRM is slightly better (lower) with the smaller 6 ohm inductors. Prior studies have also indicated that the smaller inductor size provided better results for summer north-to-south conditions. Higher impedance inductors also would have the undesirable effect of pushing more power over to the Maple Valley-SnoKing lines and reducing the TTC. In addition the smaller inductors require the addition of fewer shunt capacitors to offset the reactive losses from the inductors. The 6 ohm inductors have the effect of adding a circuit reactance that is equivalent to 8 miles of overhead 115 kV line. The 6 ohm inductors are now the preferred 115 kV project due to better performance and lower cost.

2) 6 ohm series inductors versus phase shifting transformers

Table 2: 6 ohm series inductors versus phase shifting transformers

Study #	SCL Phase Shifting Transformer	Series Inductors on SCL's 115 kV Cables- 6 ohms	Maple Valley-SnoKing High Temp	PSE's Sammamish - Lakeside - Talbot 115kV to 230kV Upgrade Project (Two Lines Operated at 230 kV)	Total TCRM - Without TCRM Lines Outside of the Puget Sound Area	Winter South North WSNI Thermal TTC at 680 MW Puget Sound Generation
1	X		X		13,122	2,455
4		X	X		8,433	2,297
15	X			X	11,500	2,136
18		X		X	8,666	2,038

The TCRM studies for the phase shifting transformer project may not reflect the true performance of this project due to the difficulty of accurately modeling the phase shifting transformer operating strategy. As a result, while the TCRM studies show poorer performance for the phase shifting transformers than for the series inductor project, the study team believes that this result is a shortcoming of the phase shifter modeling and, in fact, the phase shifters should perform as well or better than the series inductors. This was the conclusion of the TTC studies, where a benefit was observed when using the phase shifting transformers instead of fixed series inductors. However, as the incremental benefits are not believed to be sufficient to justify the higher capital and maintenance costs of the phase shifter option, the 6 ohm series inductors remain the recommended project.

3) 6 ohm series inductors versus adding a third 115 kV cable

Table 3: 6 ohm inductor versus adding a third 115 kV cable

Study #	Series Inductors on SCL's 115 kV Cables- 6 ohms	3rd 115 kV Underground Cable from Mass to Broad Street & Mass Bank 1 Energized	Maple Valley-SnoKing High Temp	PSE's Sammamish - Lakeside - Talbot 115kV to 230kV Upgrade Project (Two Lines Operated at 230 kV)	Total TCRM - Without TCRM Lines Outside of the Puget Sound Area	Winter South North WSNI Thermal TTC at 680 MW Puget Sound Generation
4	X		X		8,433	2,297
5		X	X		19,027	1,513
18	X			X	8,666	2,038
19		X		X	11,213	2,297

This option examines adding a third Seattle City Light 115 kV underground cable (a second cable from Broad Street to Massachusetts) in place of the 6 ohm inductors. The results for this alternative vary depending on whether the Sammamish-Lakeside-Talbot lines are upgraded to 230 kV or the Maple Valley-SnoKing lines are reconductored. With the preferred plan (upgrading the Sammamish-Lakeside-Talbot lines to 230 kV), there is a benefit to the alternative of adding a third cable from a TTC perspective and a slight benefit to the series inductor option from the TCRM perspective. Conversely, if the Maple Valley-SnoKing reconductor project moves forward, the series inductor option performs better from both a TCRM and TTC perspective. This is because if a third cable is added, there is still a need for the series inductors to eliminate overloading on the Broad Street-East Pine 115 kV cable, the East Pine-Maple Valley 230 kV line, and the Massachusetts 230/115 kV transformers. The third cable option is deemed to be less preferable to the recommended option primarily because the cost of the third cable is expected to far exceed the cost of the series inductors. In addition, the construction of an additional Broad-Massachusetts 115 kV cable is incompatible with Seattle City Light's future plan to add a new 230 kV cable as part of their North Downtown Substation

Project (North Downtown-Massachusetts 230 kV). The 6 ohm series inductors remain the preferred project due to better performance and lower cost.

4) *6 Ohm Series inductors versus replacing cables*

Table 4: 6 ohm inductors versus replacing cables

Study #	Series Inductors on SCL's 115 kV Cables- 6 ohms	Replace SCL's Existing 115 kV Cables (no inductors)	Maple Valley-SnoKing High Temp	PSE's Sammamish - Lakeside - Talbot 115kV to 230kV Upgrade Project (Two Lines Operated at 230 kV)	Total TCRM - Without TCRM Lines Outside of the Puget Sound Area	Winter South North WSNI Thermal TTC at 680 MW Puget Sound Generation
4	X		X		8,433	2,297
6		X	X		19,398	1,602
18	X			X	8,666	2,038
20		X		X	11,746	2,210

If the 6 ohm inductors are in place, potential overloading on the cables is no longer an issue so rebuilding the cables would have no benefit. This option examines rebuilding the cables in lieu of the 6 ohm inductors. The results for this alternative vary depending on whether the Sammamish-Lakeside-Talbot lines are upgraded to 230 kV or the Maple Valley-SnoKing lines are reconductored. With the preferred plan (upgrading the Sammamish-Lakeside-Talbot lines to 230 kV), the series inductors perform better from a TCRM perspective and slightly worse from a TTC perspective. If the Maple Valley-SnoKing reconductor project moves forward then the series inductor option performs better from both a TCRM and TTC perspective. The TCRM performance is better for the series inductor options because if the cables are replaced, there would be other limits reached on the downtown Seattle system. The additional limits reached that account for most of the TCRM increase include the East Pine 230/115 kV transformer and the Massachusetts 230/115 kV transformers. The series inductors remain the preferred project due to better performance and lower cost.

5) 6 ohm *series inductors versus the Seattle City Light North Downtown Substation project with and without series inductors*

Table 5: 6 ohm inductors versus the Seattle City Light North Downtown Substation project with and without series inductors

Study #	Series Inductors on SCL's 115 kV Cables- 6 ohms	SCL's North Downtown Substation	SCL's North Downtown Substation (6 ohm inductors)	Maple Valley-SnoKing High Temp	PSE's Sammamish - Lakeside - Talbot 115kV to 230kV Upgrade Project (Two Lines Operated at 230 kV)	Total TCRM - Without TCRM Lines Outside of the Puget Sound Area	Winter South North WSNI Thermal TTC at 680 MW Puget Sound Generation
4	X			X		8,433	2,297
32		X		X		117,049	-1,380
36			X	X		8,778	2,672
18	X				X	8,666	2,038
34		X			X	38,594	-832
38			X		X	9,101	2,207

The study results indicate that the TCRM would increase dramatically and the TTC would be negative (not capable of south-to-north transfers) unless the series inductors are included in the plans for the new North Downtown Substation. The majority of this increase is due to overloading on the Broad-North Downtown 115 kV cable. As a result, the series inductors are needed before and after the addition of the North Downtown Substation Project.

6) **6 ohm series inductors:** ***Reinforcing Maple Valley–SnoKing 230 kV lines versus options to upgrade Sammamish-Lakeside-Talbot 115 kV lines versus Monroe-Echo Lake #2***

Table 6: 6 ohm inductors – Reinforcing Maple Valley–SnoKing 230 kV lines versus options to upgrade Sammamish-Lakeside-Talbot 115 kV lines versus Monroe-Echo Lake #2

Study #	Series Inductors on SCL's 115 kV Cables- 6 ohms	Maple Valley-SnoKing High Temp	Maple Valley-SnoKing Rebuild	PSE's Sammamish - Lakeside - Talbot 115kV to 230kV Upgrade Project (Two Lines Operated at 230 kV)	PSE's Sammamish - Lakeside - Talbot 115kV to 230kV Upgrade Project (One Line Operated at 230 kV)	Monroe-Echo Lake #2 500kV	Total TCRM - Without TCRM Lines Outside of the Puget Sound Area	Winter South North WSNI Thermal TTC at 680 MW Puget Sound Generation
4	X	X					8,433	2,297
11	X		X				7,623	2,632
18	X			X			8,666	2,038
28	X	X		X			9,003	2,700
81	X				X		13,422	1,643
80	X					X	5,047	2,875

The lowest TCRM and the highest TTC for line improvements east of Lake Washington can be achieved by building the Monroe-Echo Lake #2 500 kV line in addition to the 6 ohm series inductors. Unfortunately, this is also the highest cost transmission option.

From a TCRM perspective there is little difference between the Maple Valley – SnoKing reinforcement options and the Sammamish – Lakeside – Talbot upgrade project with two lines operated at 230 kV although the Maple Valley-SnoKing rebuild option performs slightly better than the others. From a TTC perspective, there is an advantage for the Maple Valley-SnoKing options; particularly the rebuild option. However, this was not deemed to be a sufficient advantage over the preferred Sammamish-Lakeside-Talbot 230 kV upgrade project with two lines operated at 230 kV. A major benefit of the Sammamish-Lakeside-Talbot options is that

they would provide necessary load service to Lakeside Substation which the Maple Valley-SnoKing options would not. Pursuing the Sammamish-Lakeside-Talbot options at this time does not preclude reconductoring the Maple Valley-SnoKing lines at a later time.

The Sammamish – Lakeside – Talbot upgrade project can defer some of its substation construction costs by initially upgrading the 115 kV lines to 230 kV and operating one line at 115 kV and one line at 230 kV. This option did not perform as well as operating both lines at 230 kV for both TCRM and TTC. The reduction in performance has been deemed acceptable for the cost savings. The second line planned to be cut-over to 230 kV operation at a later date.

7) **6 ohm series inductors and Sammamish-Lakeside-Talbot upgrade:** ***Bothell-SnoKing rebuild versus reconductor***

Table 7: 6 ohm series inductors and Sammamish-Lakeside-Talbot upgrade: Bothell-SnoKing rebuild versus reconductor

Study #	Series Inductors on SCL's 115 kV Cables- 6 ohms	PSE's Sammamish - Lakeside - Talbot 115kV to 230kV Upgrade Project (Two Lines Operated at 230 kV)	PSE's Sammamish - Lakeside - Talbot 115kV to 230kV Upgrade Project (One Line Operated at 230 kV)	Bothell - SnoKing Rebuild	Bothell - SnoKing High Temp Instead of Rebuild	Total TCRM - Without TCRM Lines Outside of the Puget Sound Area	Winter South North WSNI Thermal TTC at 680 MW Puget Sound Generation
18	X	X		X		8,666	2,038
47	X	X			X	9,512	2,086
81	X		X	X		13,422	1,643
82	X		X		X	13,663	1,677

For either Sammamish – Lakeside – Talbot upgrade option the TCRM and TTC results are similar for the Bothell-SnoKing rebuild and reconductoring options. The reconductor of the Bothell-SnoKing lines would provide acceptable performance at a lower cost with minimal permitting and mitigation requirements.

Appendix A

Table of TCRM and TTC Results

ColumbiaGrid PSAST Options for N-1-X TCRM Determination

	115 kV Reinforcement Options									230 kV & 500 kV Reinforcement Options							TCRM & TTC Values		
Study #	SCL Phase Shifting Transformer	Series Inductors on SCL's 115 kV Cables- 26 ohms	Series Inductors on SCL's 115 kV Cables- 6 ohms	3rd 115 kV Underground Cable from Mass to Broad Street & Mass Bank 1 Energized	Replace SCL's Existing 115 kV Cables (no inductors)	Replace SCL's Existing 115 kV Cables (6 ohm inductors)	SCL's North Downtown Substation	SCL's North Downtown Substation (6 ohm inductors)	Maple Valley-SnoKing High Temp	Maple Valley-SnoKing Rebuild	PSE's Sammamish - Lakeside - Talbot 115kV to 230kV Upgrade Project (Two Lines Operated at 230 kV)	PSE's Sammamish - Lakeside - Talbot 115kV to 230kV Upgrade Project (One Line Operated at 230 kV)	Monroe-Echo Lake #2 500kV	Bothell - SnoKing High Temp Instead of Rebuild	With Covington, Portalway, Extended RAS, Bothell - SnoKing Upgrade	Total TCRM - Without TCRM Lines Outside of the Puget Sound Area	TTC (Thermal Only)	Notes
54																308,343	-	PSAST 2020 Winter South-to-North Expansion Plan Base Case
24															X	73,898	920	
1	X								X						X	13,122	2455	
3		X							X						X	10,304	2270	
4			X						X						X	8,433	2297	
5				X					X						X	19,027	1513	
6					X				X						X	19,398	1602	
7						X			X						X	8,258	2448	
32							X		X						X	117,049	-1380	
36								X	X						X	8,778	2672	
8	X									X					X	14,039	2692	
10		X								X					X	12,659	2652	
11			X							X					X	7,623	2632	
12				X						X					X	13,172	1820	
13					X					X					X	13,012	2120	
14						X				X					X	7,423	2664	
33							X			X					X	82,697	-1350	
37								X		X					X	7,111	2708	
15	X										X				X	11,500	2136	
17		X									X				X	10,460	1773	
18			X								X				X	8,666	2038	
81			X									X			X	13,422	1643	
47			X								X			X	X	9,512	2086	
82			X									X		X	X	13,663	1677	Preferred Plan
19				X							X				X	11,213	2297	
20					X						X				X	11,746	2210	
21						X					X				X	8,666	2044	
34							X				X				X	38,594	-832	
38								X			X				X	9,101	2207	
49								X			X			X	X	10,286	2233	
25	X								X		X				X	9,664	2745	
27		X							X		X				X	9,288	2497	
28			X						X		X				X	9,003	2700	
29				X					X		X				X	11,460	2305	
30					X				X		X				X	12,395	2377	
31						X			X		X				X	9,003	2700	
35							X		X		X				X	38,463	-804	
39								X	X		X				X	9,296	2732	
56								X	X		X			X	X	10,285	2753	
22													X		X	13,501	2104	
40							X						X		X	46,466	-292	
41								X					X		X	4,143	2916	
80			X										X		X	5,047	2875	

EXHIBIT B
NOTICES

Any notice required under this MOA shall be in writing and shall be delivered in person; or with proof of receipt by a nationally recognized delivery service or by United States Certified Mail. Notices are effective when received. Either Party may change the name or address for receipt of notice by providing notice of such change. The Parties shall deliver notices to the following person and address:

If to Seattle City Light:

Attention:
Phone:
Fax:
Email:

If by First Class Mail:

City of Seattle, City Light Department
(Customer Address)
(Customer City, State, Zip)

If by Overnight Delivery Service:
City of Seattle, City Light Department
(Customer Address)
(Customer City, State, Zip)

If to BPA:

Attention:
Phone:
Fax:
Email:

If by First Class Mail:

Bonneville Power Administration
P.O. Box 61409
Vancouver, WA 98666-1409

If by Overnight Delivery Service:
Bonneville Power Administration – TSE/TPP-2
7500 NE 41st Street – Suite 130
Vancouver, WA 98662

If to the Puget:

Attention:
Phone:
Fax:
Email:

If by First Class Mail:

Puget Sound Energy, Inc.
P.O. Box 97034
Bellevue, WA 98009-9734

If by Overnight Delivery Service:
Puget Sound Energy, Inc.
10885 N.E. 4th Street, Suite 1100
Bellevue, WA 98004-5591

Department of Energy

Bonneville Power Administration
P.O. Box 3621
Portland, Oregon 97208-3621

FREEDOM OF INFORMATION ACT PROGRAM

May 14, 2015

In reply refer to: FOIA BPA 2015-00508-F

Larry G. Johnson
(b)(6)

Mr. Johnson:

This communication is a second partial response to your request to the Bonneville Power Administration (BPA) for records under the Freedom of Information Act (FOIA), (5 U.S.C. § 552). Your request was received on January 13, 2015, and was acknowledged on January 13, 2015.

You requested:
"...all documents, electronic or otherwise, draft and final, including e-mail correspondence, presentations, correspondence, draft agreements, and notes related to...the design, purpose, need, scope, studies and objections to or concerns about the project presently referred to as Energize Eastside (Project as proposed by Puget Sound Energy [(PSE)]. These requests also extend to a project that was/is an immediate precursor to the Project, proposed by PSE to the Columbia Grid consortium, and referred to by PSE as "Sammamish-Lakeside-Talbot Hill" [(SLTH)]. [SLTH is] a regional grid reinforcement project which involved/involves the [Project's] subsequently designated segments "C-E-J-M"[,] and [which] propos[ed] the same kind of upgrade in the existing 115kV lines to 230kV[,] with an upgraded or new transformer at Lakeside.

Documents requested include, but are not limited to, those documents relating to any proposed or actual cost sharing by or between utilities associated with or otherwise contacted concerning the Project and/or [SLTH], including by and between Seattle City Light [(SCL)], PSE and BPA, including draft and final agreements, e-mail correspondence, and invoices.

Documents requested also include those related to the Project and/or [SLTH] which were transmitted between or among SCL and any other agencies, energy [companies] and other companies, and/or non-profit consortia, including, but not limited to, BPA, PSE, other Seattle City departments, ColumbiaGrid, FLRC, and the Western Electricity Coordinating Council. Further, all documents, electronic or otherwise, draft and final, including e-mail correspondence, are requested concerning any and all communications between PSE and SCL with respect to any use or sharing of SCL's rights of way and/or easements and/or power lines which are located on the Eastside.

Please include in your search and production of these documents any and all load and/or reliability forecasts for the future electricity needs of the Eastside[,] or any portion of it[,] in your possession, regardless of by whom made or for what purpose.

Please consider the relevant time period for these requests to be from 2008 to the present."

Response:
An ongoing search of the paper and electronic records in BPA's Transmission Sales and Transmission Project Management departments is being conducted. In an effort to both accommodate the ongoing gathering and, review of the volume of responsive records, and provide those records expediently, we are releasing records to you in partial increments. A second partial records release accompanies this communication. We are releasing a total of 27 pages, with 17 of those pages containing "non-responsive" redactions.

BPA's response effort for your FOIA request is ongoing. Because of the level of complexity of the FOIA reprocessing effort and the volume of responsive records, we are extending the target date for completion of your request to June 30, 2015.

We appreciate the opportunity to assist you. If you have any questions about this letter, please contact James King, CorSource Technology Group, Inc., assigned to Bonneville Power Administration, at 503-230-7621.

Sincerely,

C. M. Frost
Freedom of Information/Privacy Act Officer

Enclosure: Responsive documents

Wednesday June 18, 2014

NonResponsive

[redacted]

- Uzma - where are letters? She said there are 4
  - Both - Snok 1 + 2 letter
  - BPA + SCL all $ for Puget projects substation allocated to substation
  - Payment schedule / final
  - PSANI Projects are individual / distinct projects for SEPA / NEPA

Wednesday August 6, 2014

- scope change.
  send all 4 draft agreements to group
  - set up mtg w/ SCL + Puget to discuss FTC
  - set up mtg with Harder
    Jona + Paul + me
    discuss mods + FTC
    - delegated authority to sign?

)2

Aug 12

NonResponsive

[redacted]

PSANI letters
16054 - use of funds
16053 - scope change
16060 - NEPA
16062 - FTC

Wed 10/15

NonResponsive [redacted]

Justin Moffett
- Hub Adams got calls from PSE legal
  Lorna Looby - Aaron Anderson
- Bellevue

NonResponsive [redacted]

he

Monday October 20, 2014

- vm. Robin Cross
- John Phillips
  conversation - multiple contacts on PSAN1 projects
  call him
- Tasha Bryan -
  check in on Cowlitz ADF (sent hercopy)

NonResponsive

[redacted]

NonResponsive

[redacted]

Friday October 24, 2014

NonResponsive

[redacted]

- Hub Adams - talked to Lorna Looby - re funding

Tuesday December 30, 2014

NonResponsive

[redacted]

Wed Dec 31, 2014

- PSANI MOA letter to Camille

NonResponsive

[redacted]

Monday January 5, 2015

NonResponsive

[redacted]

don

Jan 6

- NonResponsive

[redacted]

- met w/ Harder
  - PSAN MOA · his mtg w/ Phil West + Booga

NonResponsive

[redacted]

Friday January 9, 2015

NonResponsive [redacted]

-Uzma- USC Inc

- Gordon Comegys working for consultant who was hired by city of Bellevue to do study - they contacted Cal Grid for info

- need call w/ John + Uzma re PSAN1 projects

- meet Jan 29th 10-11 Uzma + T staff
  Uzma sending mods to letter agrmt

NonResponsive [redacted]

Tuesday January 13, 2015 8:35

NonResponsive

[redacted]

Wednesday Jan 14 8:05

NonResponsive

[redacted]

- met w/ Jana + team on PSAIJI MOA Ltr Agreement
gave Jana copy of Cherry Point Study
Jana will set up mtg to discuss financials
sent John P. e-mail - when move ahead?

Thursday February 19, 2015

NonResponsive

[redacted]

- Uzma - re PSANI MOA Letter Agreement
  - SCL PM had additional comments
  - Phil West retiring June 2015

NonResponsive

[redacted]

NonResponsive

[redacted]

Jana J. - x 6098
heads up PSANI MOA
mtg w/ Robert Shier - status of project
funding -
costs need to be accrued in current FY
L SCL, Puget

NonResponsive

[redacted]

Thursday March 5, 2015

NonResponsive [redacted]

- 9:30 - Kathy Hunter - PSAN $$

NonResponsive [redacted]

Ask Seattle
forecasted budget for each year
everything to date through June 30
get by June 22

Send draft letter agreement
to Robert Shier

NonResponsive [redacted]

April 6 (cont.)

NonResponsive

[redacted]

- MOA - with Allen Chan for review

NonResponsive

[redacted]

Friday November 8, 2013

Bothell-Snoking line project

Uzma
Phil / SCL
Bob
Mike M - PM
Angela
Natasha
Jana
Tyler
Jenny
Dave C
Berhanu

- Uzma - how did BPA arrive at the 2200A rating that we wanted to achieve?
Dave C. - ran several scenarios and was able to load up to 2185A, so we chose 2200A rating
N-6 scenario
No Bothell-Snoking RAS - desirable to eliminate.
BPA rates line using -5C
SCL rates line using 0C

SCL is currently at max amperage using standard conductor - if they want higher rating on some structures they need to use high temp conductor and max rating would be about 1850-1900A. SCL believes that the cost of high temp conductor is reasonable at $2.5 million - est provided by 3M. No structures or substation equipment would need to be replaced.
Tyler/Natasha will share summary of EPRI report with Uzma. BPA not willing to use high-temp conductor due to poor performance/reliability

Look at B3/15 SCL p. Bothell-Snoking #1 structure may not be able to handle the larger BPA conductor - if choose to re-build, may need to include this cost in estimate for BPA part of project

Timberman,Toni L (BPA) - TSE-TPP-2

From: Marleau,Michael L (BPA) - TEP-TPP-1
Sent: Friday, November 08, 2013 8:35 AM
To: Dorf, Angela; Wilson,Jenny (BPA) - TPP-OPP-3; tashburn@bpa.gov; Cathcart,David A (BPA) - TPP-OPP-3; Tesema,Berhanu K (BPA) - TPP-OPP-3; Jusupovic,Jana D (BPA) - TPC-TPP-4; Timberman,Toni L (BPA) - TSE-TPP-2; Siddiqi, Uzma (Uzma.Siddiqi@seattle.gov); Ambrose, Philip (Philip.Ambrose@seattle.gov); bob.risch@seattle.gov; Tyson,Ivy L (BPA) - TELP-TPP-3
Subject: RE: PSANI Bothell-SnoKing Project (meeting room TPP154)

BPA-SCL Interconnection....

Update:

Agenda:

1. **Line Rating:** BPA is planning to use at least 2200A @ -5deg. C so we will definitely be rebuilding our portion of the SnoKing-Bothell Lines 1 & 2. We will develop estimates based on a rebuild with conventional conductor.
2. **Interconnection Point:** The proposed interconnection point would have the line owner terminate the line to the structure. See attachment.
3. **Relaying:** 230kV Snoking – Bothell No. 1 line has KD/IRD-9 electromechanical relays on it, along with RFL-9745 and some Remedial Action System (RAS) equipment. If we are going to have fiber communications to Bothell it would be nice to upgrade the relays to SEL-411L line current differential relays as part of the line bebuild.

PHONE BRIDGE INFO FOR PARTICIPANTS:
To call into the bridge dial ext. 8001 (360-418-8001), and at any time during or after the message and the double beep, enter 6053 #.

The system will not allow access into the bridge until 5 minutes before the start time of your conference.

Callers can mute or un-mute their lines by pressing *6. If you will not be speaking, please mute your line to minimize noise on the bridge.

Participants should not place this call on hold; doing so will cause other participants to hear their hold music.

If you need assistance dialing into the bridge, have questions or problems, or need to cancel this bridge, please contact the BPA Phone office at x8888 (360-418-8888) or x5050 (503-230-5050).

Monday Feb. 24, 2014
PSANI Project Manager Meeting
- send attendee list

S
Bob Riech
Phil Ambrose
Uzma
P LeAnn Kostek
Eleanor Yuri
Ralph Straw?

- Snoking - Bothell #1 + #2 line ratings
  - ratings in 2/24 e-mail from Mike
  - will proceed w/ environmental + prelim design - dont expect much impact
  - since structures will be much in same place
  - replace discs @ Snoking with 3000A + replace relays

- BPA will fund its Bothell - Snoking project outside of the Letter Agreement
  ~ draft to cust end of ~~March~~ March
  Mike proposed Letter Agreement rather than amend MOA

- re environmental review -
  each PSANI project will have its own NEPA review - each has its own benefits
  SCL very concerned about roles and responsibilitie regarding environmental review + interaction between projects -
  BPA
- Uzma brought up the need for a separate letter agreement that specifies funding for PSE project be limited to transformer.

not the line.

SCL -
Broad St substation - start design
July-Aug 2014 - will issue RFP April
inductors going at Denney & Broad substations
Bothell - Snoking - reconductor -
- still doing preliminary engineering & developing conductor specs + coordinating with their environmental

Puget -
- starting community outreach for line build - released segment maps - 2 advisory group mtgs and 2 public meetings
major issues - why not working with SCL, they and and want it underground.
No question regarding need for project - mostly NIMBY
- design + permitting 2015 hoping to have permits in hand 2017

- BPA Raver -
- expanding yard for transformer bank + ring bus
- acquiring property + scoping environmental
- 50% design
- construction start April 2015

Covington
- construction start April 2015
- replacing a lot of equipment
- re-terminating some lines

N. Intertie RAS -
starting design 2015-2017
install 2016/2017
working with BCH - they are on board - not as complex technically as originally thought.

- Snoking - Bothell line design coordination
Mike proposed meeting at SCL ~ mid-march to discuss tying two sections together at change of ownership. Get both sets of line design folks talking. Also site visit.

Action Items

Mike
- draft some verbage for Letter Agreement re cost sharing - work with Jana + Toni
- work with Jason Moffett regarding enviro associated with Bothell - Snoking

Toni
- draft separate Letter Agreement for $$ associated with funding PSE projects.

- Uzma will set up next PM meeting ~ Sept

e-mail to Hardev re. BPA funding
BPA portion approved by Larry B. pending approval process
- recond or rebuild - BPA fund either?
- estimated cost
- all actuals have come in lower
- may have funding available w/out redoing Business Case

7 NEPA -
proposed to Puget that all Nepa be associated with Lakeside Transformer

ask Who have Mike & Angela been talking to at Puget about NEPA? Where did they leave it? didn't discuss with Puget staff
Funding -
we need periodic updates on spent funds

Agreement -
Funding
Snok-Bothell
NEPA on

3/19/2014

- check Hardev's calendar
- ask Hardev about approach with Letter Agreements

PSANI Funding

Letter agreement
- sample invoice/description of work done
- contact for payment questions
- contact for PM - Mike will need to verify work
- send invoices to Mike M. and Michelle H
- invoice quarterly
- forecast of work to be done next ~~quarter~~ FY and estimated amount will be invoiced

SCL invoice should show 100% of cost, broken out showing 2/3 to Seattle, 1/3 to BPA

Jana will check on NEPA funding for SCL + Puget projects.

- schedule meeting to discuss letter agreements Dena, Jana, Mike?

Mtg w/ Jana, Michelle H.

Letter Agreements:

- BPA fund its work on Bothell-Snoking #1 & #2
- BPA contribution to PSE project limited to substation work
- SCL contribution to PSE project limited to substation work
- BPA / SCL / PSE agreement on how $ changes hands

x6816 Jenny Wilson - PRD

- what is cost of BPA part of Bothell-Snoking?
- would this have been part of the BPA preferred plan if we had noticed that BPA had responsibility for that part?
- does BPA funding this part of the project mean that the Business Case needs to be updated?
- recond or rebuild?

Wed. October 2, 2013

- Berhanu - re mtg w/SCL & Puget on PSANI projects - not at meeting - was a PM meeting
  Mike Marleau 6053 Angela Dorf was the only BPA person there - not a bad

NonResponsive

[redacted]

- John Phillips - left msg re PSANI projects

- Uzma Siddiqi - vm full - sent her e-mail
  returned call - upset about PSANI PM mtg
  BPA excluded NI RAs from C. Grid 2013 assessment
  City Light has 4 projects - all on schedule & moving forward

  met w/ Angela Dorf HD Mike ~~Merla~~ Marleau last Monday
  Bothell - Smoking

  Meeting last Monday - because they had to get

Berhanu - mtg with PM tomorrow Oct 3 1:30 - sent me invite

10/7/2013

PSAN1 + joint projects w/Puget — Th 17th Pm or Fri 18th this wk ?
- Schedule Mtg w/Kim next 3 weeks — Fri 25th
  - Gant chart — Tues 22
  - system map
  - history
  - interaction w/joint projects policy development

NonResponsive

[redacted]

NonResponsive [redacted]

- John Phillips -
  Eastside 230 project - 2018
  Permitting folks not to go to identify substations & start NEPA process.
  LeAnn talked to permitting person Friday

- Called Mike Marleau - N/A
- left msg for Berhanu
- left msg for John Phillips

NonResponsive [redacted]

John Phillips - believes agreement accommodates the project changes - no need for letter agreements. Suggested meeting next time I am up - joint with SCL

10/10/2013
Bothell-Snoking Reconductor conf. call
Uzma- referred to MOA for project description and project cost - concerned about cost if BPA does its section
ACSR on steel line 1.3 in. OD Deschutes trap
AAC on wood line " trap. "Hood" ~1500kcmil
1900A @ -5C (BPA's normal winter rating)
BPA does not need to use hightemp conductor to achieve the 1848A winter rating

* - Len will send Uzma the conductor datasheets
- BPA design will be in-house. Usually contract construction. since these lines are so short, Mike might be able to do in-house.
5 folks qualified to bid - they bid on-line
preferred vendors

Berhanu - BPA does not want to be limiting on line - wants to match ampacity of SCL's high temp low sag conductor
Per Len - if BPA needs to go above 1900A with conventional conductor, would change project from recond. to rebuild. Or could look at ACSS conductor (Len)

Uzma - other concern - estimate in MOA was for a single project - one design, one construction contractor -
need to weave projects together to get updated estimate.
Mike can get in few weeks & send to Uzma

March 26, 2014

NonResponsive

[redacted]

- PSAN Projects -
Puget & Seattle end up giving each other same amount of $ - would prefer not to have to spend the $

NonResponsive

[redacted]

Department of Energy

Bonneville Power Administration
P.O. Box 3621
Portland, Oregon 97208-3621

FREEDOM OF INFORMATION ACT/PRIVACY PROGRAM

June 9, 2015

In reply refer to: FOIA BPA 2015-00508-F

Larry G. Johnson
(b)(6)

Mr. Johnson:

This communication is a third partial response to your request to the Bonneville Power Administration (BPA) for records under the Freedom of Information Act (FOIA), (5 U.S.C. § 552). Your request was received on January 13, 2015 and was acknowledged on January 13, 2015.

You requested:

"...all documents, electronic or otherwise, draft and final, including e-mail correspondence, presentations, correspondence, draft agreements, and notes related to...the design, purpose, need, scope, studies and objections to or concerns about the project presently referred to as Energize Eastside (Project as proposed by Puget Sound Energy [(PSE)]. These requests also extend to a project that was/is an immediate precursor to the Project, proposed by PSE to the Columbia Grid consortium, and referred to by PSE as "Sammamish-Lakeside-Talbot Hill" [(SLTH)]. [SLTH is] a regional grid reinforcement project which involved/involves the [Project's] subsequently designated segments "C-E-J-M"[,] and [which] propos[ed] the same kind of upgrade in the existing 115kV lines to 230kV[,] with an upgraded or new transformer at Lakeside.

Documents requested include, but are not limited to, those documents relating to any proposed or actual cost sharing by or between utilities associated with or otherwise contacted concerning the Project and/or [SLTH], including by and between Seattle City Light [(SCL)], PSE and BPA, including draft and final agreements, e-mail correspondence, and invoices.

Documents requested also include those related to the Project and/or [SLTH] which were transmitted between or among SCL and any other agencies, energy [companies] and other companies, and/or non-profit consortia, including, but not limited to, BPA, PSE, other Seattle City departments, ColumbiaGrid, FLRC, and the Western Electricity Coordinating Council. Further, all documents, electronic or otherwise, draft and final, including e-mail correspondence, are requested concerning any and all communications between PSE and SCL with respect to any

use or sharing of SCL's rights of way and/or easements and/or power lines which are located on the Eastside.

Please include in your search and production of these documents any and all load and/or reliability forecasts for the future electricity needs of the Eastside[,] or any portion of it[,] in your possession, regardless of by whom made or for what purpose.

Please consider the relevant time period for these requests to be from 2008 to the present."

Response:

An ongoing search of the paper and electronic records in BPA's Transmission Sales and Transmission Project Management departments is being conducted. In an effort to both accommodate the ongoing gathering and review of the volume of responsive records, and provide those records expediently, we are releasing records to you in partial increments. A third partial records release accompanies this communication. We are releasing a total of 35 pages, with no redactions.

BPA's response effort for your FOIA request is ongoing. We anticipate providing you with responsive records, periodically. Because of the level of complexity of the FOIA reprocessing effort and the volume of responsive records, we are extending the target date for completion of your request to August 31, 2015.

We appreciate the opportunity to assist you. If you have any questions about this letter, please contact James King, CorSource Technology Group, Inc., assigned to Bonneville Power Administration, at 503-230-7621.

Sincerely,

C. M. Frost
Freedom of Information/Privacy Act Officer

Enclosure: Responsive records

QUANTA TECHNOLOGY

the power of 1

PSANI Project Cost Estimates

Columbia Grid Executive Committee

July 29, 2011

Revision 2

About Quanta Technology

- Independent Consulting Arm of Quanta Services – Fortune 500 Company, "PWR", $3.9B in 2010
- Part of the Electric Division of Quanta Services
- 100+ Staff & Associates
- Senior staff have 25+ years industry experience
- Consulting and Utility Management Backgrounds

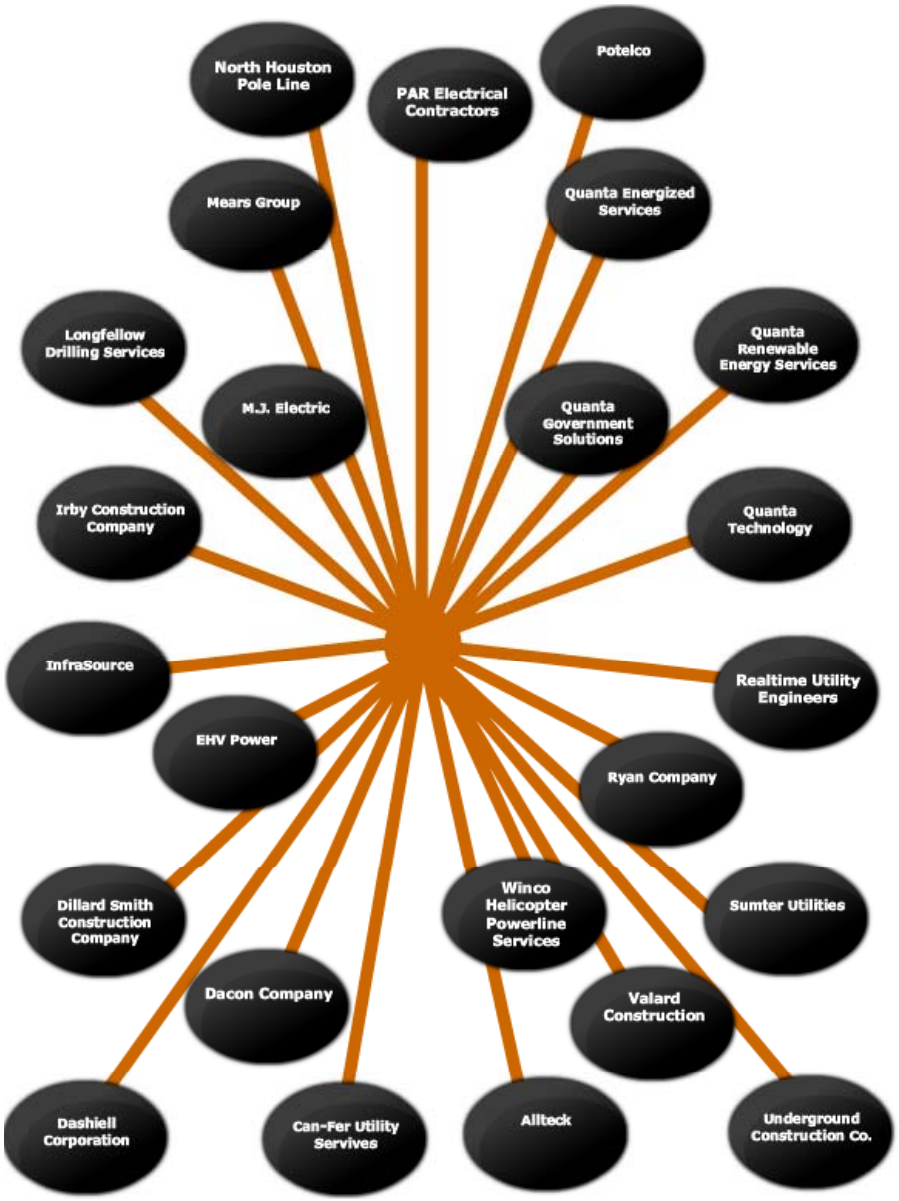

QUANTA TECHNOLOGY

ColumbiaGrid

© 2011 Quanta Technology LLC

Presentation Outline

1. Project Overview
2. Cost Estimating Methodology
3. Key Cost Estimating Assumptions
4. Project Cost Estimates
   i. Project Assumptions & Contingencies
5. Comparison with Columbia Grid Planning Cost Estimates

© 2011 Quanta Technology LLC

Project Overview

- Engaged by Columbia Grid Executive Committee to provide an independent, 3rd party cost estimate for PSANI Facilities Impacted by South to North Flows:
  1. Sammamish to Lakeside to Talbot Rebuild
  2. Bothell to SnoKing Reconductor
  3. SCL West Side Inductors
  4. Delridge to Duwamish Reconductor
  5. SnoKing to Maple Valley Reconductor
  6. Covington Transformer Addition
- Applied a common cost estimating methodology for each project
- Presented Quanta Technology draft cost estimates at July 15, 2011 Columbia Grid Executive Committee
- Revised based upon feedback
- Updated presentation on July 29, 2011

QUANTA TECHNOLOGY

ColumbiaGrid

© 2011 Quanta Technology LLC

Quanta Technology Methodology

- Held face to face meeting with planning/engineering teams at PSE, SCL & BPA week of June 13th
- Determined specific construction scope of each project
- Collected project details such as:
  - Line Route & Substation Sites
  - Plan & Profile When Available
  - Layout Drawings When Available
  - Recent Project Cost Estimates
  - Equipment Budgetary Costs
- Applied Quanta Technology assumptions and developed initial project cost estimate
- Reviewed with each individual company for feedback
- Adjusted project cost estimate based upon executive committee feedback

© 2011 Quanta Technology LLC

Key Cost Estimating Assumptions

- Equipment
  - Vendor budgetary quotes or recent purchase orders used for pricing
- Foundations
  - Foundations selected are sizes that are typically used at this voltage for a competent soil
  - Drilled pier foundations will be utilized for the support structures and pad foundations will be used for large equipment supports
  - The Transformer base dimensions is 19'x10
  - The Transformer containment pit shall be a concrete
- Structures
  - Structures assumed are Dashiell (a Quanta Services Company) standard structures
  - Substation equipment, bus, and switch supports will consist of typical tube shape steel members
  - Dead-ends will consist of tapered tubular steel members

© 2011 Quanta Technology LLC

Key Assumptions cont.

- Transmission Lines
  - Clear access to the site is available
  - Self support structures used with no need for guy wires
  - Direct-embedded steel poles for tangent and piered foundations for dead-ends
  - NESC Heavy loading
  - Reconductor projects assume no structure replacements will be required
  - Engineering/Project Management/Internal assumed 14% of project cost
  - Highway crossing control costs are $25k per major intersection
  - Highway repair costs estimated at $25k per crossing (when needed)

- General
  - Standard forty (40) hour work week
  - No taxes are included
  - All soil is non-contaminated
  - Permitting estimates are included

© 2011 Quanta Technology LLC

Caveats

- No environmental or geotechnical data was available
- No highway repair costs currently identified as necessary for any of these projects
- No equipment specifications provided
- No one line diagrams for control and protection schemes provided
- No relay modification or upgrade work at remote stations were included
- Costs are in 2011 dollars
- Some equipment cost provided by vendors required a confidentiality agreement between Quanta Technology and the vendor

© 2011 Quanta Technology LLC

Sammamish to Lakeside to Talbot Rebuild

- Project includes:
  - Rebuilding the existing 115 kV double circuit line for 230 kV operation
    - Existing facilities are 2 115 kV wood H-frame structures in 100 ft ROW
  - Expanding the Lakeside Substation to add a 230 kV transformer
  - Initially operating one line at 230 kV and the other at 115 kV
- Two options under consideration for rebuilding the line
  1. Use double circuit towers
  2. Use two single circuit towers
- Total Cost Estimate
  1. W/ double circuit towers – $60.8 Million
  2. W/ single circuit towers – $64.5 Million

QUANTA TECHNOLOGY ColumbiaGrid

© 2011 Quanta Technology LLC

Sammamish-Talbot-Lakeside Single Circuit Cost Estimate

Transmission Line Estimate for Sammamish to Talbot 230 kV Transmission Line (SC)

Materials					
Sammamish to Lakeside				$	9,227,995
Lakeside to Talbot				$	9,673,256
	Total Materials			**$**	**18,901,251**
Labor					
Sammamish to Lakeside				$	4,307,760
Lakeside to Talbot				$	5,362,812
Mobilization and Demobilization				$	150,000
Public Outreach (In-House & Consultants)				$	600,000
3 FTEs x 2 years				$	2,000,000
Restoration & Mitigations				$	2,010,250
	Total labor			**$**	**14,430,822**
Overheads					
Engineering and Project Management			14%	**$**	**4,666,490**
Total				**$**	**37,998,563**

Contingency 15% **$43,698,348**

QUANTA TECHNOLOGY

ColumbiaGrid

© 2011 Quanta Technology LLC

Sammamish-Talbot-Lakeside Double Circuit Cost Est.

Transmission Line Estimate for Sammamish to Talbot 230 kV Transmission Line (DC)

Materials			
Sammamish to Lakeside		$	8,826,440
Lakeside to Talbot		$	8,825,662
	Total Materials	**$**	**17,652,102**
Labor			
Sammamish to Lakeside		$	3,620,208
Lakeside to Talbot		$	4,506,492
Mobilization and Demobilization		$	150,000
Public Outreach (In-House & Consultants)		$	600,000
3 FTEs x 2 years		$	2,000,000
Restoration & Mitigations		$	2,010,250
	Total Labor	**$**	**12,886,950**
Overheads			
Engineering and Project Management	14%	$	4,275,467
Total			**$34,814,520**

Contingency 15% **$40,036,698**

QUANTA TECHNOLOGY

ColumbiaGrid

© 2011 Quanta Technology LLC

Lakeside Substation Addition Cost Estimate

- Cost Breakdown to add a single 230/115 kV Transformer

BID SUMMARY	July 12, 2011

PROJECT DATA

Project Title: Lakeside Substation w/1 Autotransformer
Client: PSE

Price SUMMARY

		Subtotal	
Engineering & Services			
Engineering	$	621,345	25%
Field Services	$	312,500	13%
Subcontracts	$	1,295,275	53%
Const. & Proj. Mgmt	$	223,174	9%
Eng & Services:	**$**	**2,452,294**	
Materials			
Major Apparatus	$	5,744,900	65%
Misc. Apparatus	$	1,070,153	12%
Misc. Material	$	1,976,506	22%
Materials:	**$**	**8,791,559**	
Construction labor & Contingency			
All 3 substations	$	7,576,000	78%
10% Contingency	$	1,881,985	19%
Substation Security	$	200,000	2%
Construction labor	**$**	**9,657,985**	
Totals			
TOTALS	**$**	**20,901,838.00**	

© 2011 Quanta Technology LLC

Sammamish-Lakeside-Talbot Project Assumptions

- Key Project Assumptions
  - 4 Major Highway Crossings
  - $140,000 for WA State Patrol and Traffic Control
  - $400,000 Permit Costs
  - ROW was sufficient for project
- Contingencies
  - 10% contingency for substation cost because the actual layout of the substation expansion has not been determined
  - 15% contingency for the line rebuilds since soil type is not yet determined and additional foundations may be required

© 2011 Quanta Technology LLC

Bothell to SnoKing Reconductor Project

- This project is a reconductoring of the existing Bothell to SnoKing 230 kV line
- New conductor would use High Temperature Low Sag composite core
- Two conductor sizes are under consideration – 795 and 886
- 3M indicates that the core is the same for both conductors

© 2011 Quanta Technology LLC

Cost Estimate: Bothell to SnoKing Reconductor 795 ACCR

Transmission Line Estimate for Snoking to Bothell 230 kV Transmission Line

795 ACCR

	Line Length	Miles	3.68			
Materials						
Item	Description	Details		Unit	Unit Cost	Total
1	Conductor	795 ACCR Drake		Foot	$ 14.00	
5		Conductors per circuit	3			
6		Circuits	2			
7		Conductors Feet	116582.4			$ 1,632,154
8	Structures					
9		No Changes				
14	Hardware					
15				Lot	4.00%	$ 65,286
		Materials				**$ 1,697,440**

Labor						
Item	Description	Details	Hours/Week	Unit	Rate/Hours	Weekly Rate
18	**Labor - Installation**					
19	Crew Size	12	40	Manhrs	$ 200.00	$ 96,000.00
20						
21	Performance:	Miles per Week	Weeks Duration			Labor Total
22		2	3.68			$ 353,280
27	ROW Clearing	ACRES	45	AC	$ 800.00	$ 35,685
	Mobilization & Demob					$ 50,000
		Total labor Costs				**$ 438,965**
	Engineering, PM & Internal Review	14%				$ 299,097
		Total				**$ 2,435,501**

© 2011 Quanta Technology LLC

Cost Estimate: Bothell to SnoKing Reconductor 886 T15

Transmission Line Estimate for Snoking to Bothell 230 kV Transmission Line
886 -T15

	Line Length	Miles	3.68			
Materials						
Item	Description	Details		Unit	Unit Cost	Total
1	Conductor	ACCR 886-T15		Foot	$ 15.71	
5		Conductors per circuit	3			
6		Circuits	2			
7		Conductors Feet	116582.4			$ 1,831,510
8	Structures					
9		No Changes				
14	Hardware					
15				Lot	4.00%	$ 73,260
		Materials				**$ 1,904,770**

Labor						
Item	Description	Details	Hours/Week	Unit	Rate/Hours	Weekly Rate
18	**Labor - Installation**					
19	Crew Size	12	40	Manhrs	$ 200.00	$ 96,000.00
20						
21	Performance:	Miles per Week	Weeks Duration			Labor Total
22		2	3.68			$ 353,280
27	ROW Clearing	ACRES	45	AC	$ 800.00	$ 35,685
	Mobilization & Demob					$ 50,000
		Total labor Costs				**$ 438,965**
	Engineering, PM & Internal Review	15%				$ 351,560
		Total				**$ 2,695,295**

© 2011 Quanta Technology LLC

Bothell to SnoKing Assumptions

- Key Project Assumptions
  - Same basic line design as Maple Valley to SnoKing
  - No structural changes were needed
- Contingencies
  - No contingencies included since project appears to be well defined

© 2011 Quanta Technology LLC

Installing Two Inductors at SCL

- Two 6 ohm inductors
- One located at Broad St. Substation
- One located at NODO Substation

- Total Cost Estimate - $11.6 M (no land included)

© 2011 Quanta Technology LLC

Broad St Inductor Cost Estimate

PROJECT DATA

Project Title:	Broad Street Substation Series Inductors
Client:	SCL

Price SUMMARY

		Subtotal	
Engineering & Services			
Engineering	$	372,807	30%
Field Services	$	75,000	6%
Subcontracts	$	569,275	46%
Const. & Proj. Mgmt	$	223,174	18%
Eng & Services:	**$**	**1,240,256**	
Materials			
Major Apparatus	$	3,014,550	79%
Misc. Apparatus	$	29,000	1%
Misc. Material	$	773,980	20%
Materials:	**$**	**3,817,530**	
Construction labor & Land			
Labor	$	900,000	75%
Land	$	-	0%
SCL Inspection & Review	$	297,889	25%
Construction labor	**$**	**1,197,889**	
Totals			
TOTALS	**$**	**6,255,675**	

Contengency 15% $ 7,194,026

© 2011 Quanta Technology LLC

NODO Inductor Cost Estimate

PROJECT DATA

Project Title:	Broad Street Substation Series Inductors
Client:	SCL

Price SUMMARY

		Subtotal	
Engineering & Services			
Engineering	$	155,336	27%
Field Services	$	75,000	13%
Subcontracts	$	242,000	42%
Const. & Proj. Mgmt	$	100,218	18%
Eng & Services:	**$**	**572,554**	
Materials			
Major Apparatus	$	1,370,250	63%
Misc. Apparatus	$	29,000	1%
Misc. Material	$	773,980	36%
Materials:	**$**	**2,173,230**	
Construction labor & Contingency.			
Labor	$	900,000	83%
Land Contingency	$	-	0%
SCL Inspection & Review	$	182,289	17%
Construction labor	**$**	**1,082,289**	
Totals			
TOTALS	**$**	**3,828,073**	

Contingency 15% $ 4,402,284

© 2011 Quanta Technology LLC

Inductor Assumptions

- Key Project Assumptions
  - Land Cost for NODO was not included since real estate has been procured
  - Land cost for Broad was not yet included
  - 6 ohm inductor was assumed
  - GIS breakers were assumed at Broad St and NODO
  - One set of GIS breakers would be located by the inductors for the Broad St installation
- Contingencies
  - 15% since at very beginning of design stage in both locations

© 2011 Quanta Technology LLC

Delridge to Duwamish Reconductor Project

- This project is a reconductoring of the existing Delridge to Duwamish 230 kV line
- New conductor would use High Temperature Low Sag composite core
- Two conductor sizes are under consideration – 795 and 886
- 3M indicates that the core is the same for both conductors

© 2011 Quanta Technology LLC

Delridge to Duwamish 795 Reconductor Cost Estimate

Transmission Line Estimate for
Duwamish to Delridge 230 kV Transmission Line 795

Materials			
Duwamish to Delridge		$	1,161,912
	Total Materials	**$**	**1,161,912**
Labor			
Duwamish to Delridge		$	239,520
Mobilization and Demobilization		$	100,000
Restorations & Mitigations		$	62,375
Traffic Control		$	50,000
	Total labor	**$**	**451,895**
Overheads			
Engineering and Project Management	14%	**$**	**225,933**
Total		**$**	**1,839,739**

© 2011 Quanta Technology LLC

Delridge to Duwamish 886 Reconductor Cost Estimate

Transmission Line Estimate for
Duwamish to Delridge 230 kV Transmission Line 886

Materials			
Duwamish to Delridge		$	**1,303,831**
	Total Materials	**$**	**1,303,831**
Labor			
Duwamish to Delridge		$	239,520
Mobilization and Demobilization		$	100,000
Restorations & Mitigations		$	**62,375**
Traffic Control		$	**50,000**
	Total labor	**$**	**451,895**
Overheads			
Engineering and Project Management	**14%**	**$**	**245,802**

Total	**$2,001,527**

© 2011 Quanta Technology LLC

Delridge to Duwamish Assumptions

- Key Project Assumptions
  - No structural changes were needed
- Contingencies
  - No contingencies included since project appears to be well defined

© 2011 Quanta Technology LLC

Maple Valley to SnoKing Reconductor Project

- This project is a reconductoring of the existing Maple Valley to SnoKing 230 kV line
- New conductor would use High Temperature Low Sag composite core
- Two conductor sizes are under consideration – 795 and 886
- 3M indicates that the core is the same for both conductors

© 2011 Quanta Technology LLC

Cost Estimate: SnoKing to Maple Valley Reconductor 795 ACCR

Transmission Line Estimate for Maple Valley to Snoking 230 kV Transmission Line

795 ACCR

	Line Length	Miles	24.4			
Materials						
Item	Description	Details		Unit	Unit Cost	Total
1	Conductor	795 ACCR Drake		Foot	$ 14.00	
5		Conductors per circuit	3			
6		Circuits	2			
7		Conductors Feet	772992			$ 10,821,888
8	Structures					
9		No Changes				
14	Hardware					
15				Lot	4.00%	$ 432,876
		Materials				**$ 11,254,764**

Labor						
Item	Description	Details	Hours/Week	Unit	Rate/Hours	Weekly Rate
18	**Labor - Installation**					
19	Crew Size	12	40	Manhrs	$ 200.00	$ 96,000.00
20						
21	Performance:	Miles per Week	Weeks Duration			Labor Total
22		2	24.4			$ 2,342,400
27	ROW Clearing	ACRES	296	AC	$ 800.00	$ 236,606
	Mobilization & Demob					$ 150,000
		Total labor Costs				**$ 2,729,006**
	Engineering, PM & Internal Review	14%				$ 1,957,728
		Total				**$ 15,941,497**

© 2011 Quanta Technology LLC

Cost Estimate: SnoKing to Maple Valley Reconductor 886-T15

Transmission Line Estimate for Maple Valley to Snoking 230 kV Transmission Line

886 -T15

	Line Length	Miles	24.4			
	Materials					
Item	Description	Details		Unit	Unit Cost	Total
1	Conductor	ACCR 886-T15		Foot	$ 15.71	
5		Conductors per circuit	3			
6		Circuits	2			
7		Conductors Feet	772992			$ 12,143,704
8	Structures					
9		No Changes				
14	Hardware					
15				Lot	4.00%	$ 485,748
		Materials				**$ 12,629,452**

	Labor					
Item	Description	Details	Hours/Week	Unit	Rate/Hours	Weekly Rate
18	**Labor - Installation**					
19	Crew Size	12	40	Manhrs	$ 200.00	$ 96,000.00
20						
21	Performance:	Miles per Week	Weeks Duration			Labor Total
22		2	24.4			$ 2,342,400
27	ROW Clearing	ACRES	296	AC	$ 800.00	$ 236,606
	Mobilization & Demob					$ 150,000
		Total labor Costs				**$ 2,729,006**
	Engineering, PM & Internal Review	14%				$ 2,150,184
		Total				**$ 17,508,643**

© 2011 Quanta Technology LLC

Maple Valley to SnoKing Assumptions

- Key Project Assumptions
  - Same basic line design as Bothell to SnoKing
  - No structural changes were needed
- Contingencies
  - No contingencies included since project appears to be well defined

© 2011 Quanta Technology LLC

Covington 500 kV Transformer Addition Project

- One 500 kV transformer bank would be added at Covington
- Relocate existing 500 kV bank
- Grading work to expand the yard
- T-Line relocations required for reconfiguring 500 kV buses

© 2011 Quanta Technology LLC

Cost Estimate: Covington 500kV Transformer Addition

PROJECT DATA

Project Title: Covington Substation
Client: BPA

Price SUMMARY

Base		Subtotal	
Engineering & Services			
Engineering	$	3,106,725	43%
Field Services	$	937,500	13%
Subcontracts	$	2,839,568	39%
Const. & Proj. Mgmt	$	318,496	4%
Eng & Services:	**$**	**7,202,289**	
Materials			
Major Apparatus	$	25,241,600	84%
Misc. Apparatus	$	1,920,960	6%
Misc. Material	$	2,808,907	9%
Materials:	**$**	**29,971,467**	
Construction labor & Contingency.			
Both substations	$	9,550,000	51%
20% Contingency	$	9,344,751	49%
	$	-	0%
Construction labor	**$**	**18,894,751**	
Totals			
TOTALS	**$**	**56,068,507.00**	

© 2011 Quanta Technology LLC

Covington Transformer Assumptions

- Key Project Assumptions
  - Covington is the site .vs. other locations still under consideration at Columbia Grid
- Contingencies
  - 20% since project is conceptual at this time

© 2011 Quanta Technology LLC

Project Notes:

- For high temp, low sag conductor 795 ACCR is recommended over 886 ACCR T15 based upon cost performance .vs. sag. Both satisfy CG loading requirements to achieve south to north TTC target with existing towers. Getting full current carrying capability of 886 ACCR T15 appears to require structural modifications based upon our preliminary review.
  - July 29th Update - Columbia Grid is currently recommending 795 ACCR for the reconductor projects

- BPA Covington Transformer Project was not as far developed as the other projects, therefore the QT Cost Estimate relies much more on QT assumptions than the other projects.

- Single Transformer cost was used for Lakeside since that is the basis for the cost estimate provided in the CG Report dated July, 2011.

© 2011 Quanta Technology LLC

CG Cost Estimate .vs. QT Cost Estimate ($M)

Project	CG (1) Cost Estimate	QT Cost Estimate	Delta	Percent
Sammamish to Lakeside to Talbot & XFMR SCkt	$65.0	$64.5	-$0.5	-0.8%
Sammamish to Lakeside to Talbot & XFMR DCkt	$65.0	$60.8	-$4.2	-6.5%
Bothell to SnoKing Reconductor - 795 ACCR	$3.0	$2.4	-$0.6	-20.0%
Bothell to SnoKing Reconductor - 886-T15	$3.0	$2.7	-$0.3	-10.0%
SCL West Side Inductors (See Note 2)	$13.0	$11.6	-$1.4	-10.8%
Delridge to Duwamish Reconductor (see Note 3)	$2.0	$1.8	-$0.2	-10.0%
Covington Transformer (See Note 4)	$60.0	$56.1	-$3.9	-6.5%
SnoKing to Maple Valley 795 ACCR	na	$15.9	na	
SnoKing to Maple Valley 886-T15	na	$17.5	na	

Notes:

1) Source is June, 2011 Report from Columbia Grid.
2) Land acquistion cost not included. CG still working out final sizing.
3) 795 conductor size used for this comparison
4) Construction project scope not as developed as other projects.

© 2011 Quanta Technology LLC

Questions?

Contacts:
Don Morrow
(919) 334 3023
dmorrow@quanta-technology.com

John Widdifield
(919) 334 3091
jwiddifield@quanta-technology.com

© 2011 Quanta Technology LLC

Department of Energy

Bonneville Power Administration
P.O. Box 3621
Portland, Oregon 97208-3621

FREEDOM OF INFORMATION ACT/PRIVACY PROGRAM

April 15, 2016

In reply refer to: FOIA BPA 2015-00508-F

Larry G. Johnson
(b)(6)

Dear Mr. Johnson:

This communication is the Bonneville Power Administration's (BPA) fourth and final response to your Freedom of Information Act (FOIA) request, FOIA BPA 2015-00508-F. Your request was received on January 13, 2015, and was acknowledged on January 26, 2015.

The Request

> "...all documents, electronic or otherwise, draft and final, including e-mail correspondence, presentations, correspondence, draft agreements, and notes related to...the design, purpose, need, scope, studies and objections to or concerns about the project presently referred to as Energize Eastside (Project as proposed by Puget Sound Energy [(PSE)]. These requests also extend to a project that was/is an immediate precursor to the Project, proposed by PSE to the Columbia Grid consortium, and referred to by [PSE] as "Sammamish-Lakeside-Talbot Hill" [(SLTH)]. [SLTH is] a regional grid reinforcement project which involved/involves the [Project's] subsequently designated segments "C-E-J-M"[,] and [which] propos[ed] the same kind of upgrade in the existing 115kV lines to 230kV[,] with an upgraded or new transformer at Lakeside.
>
> Documents requested include, but are not limited to, those documents relating to any proposed or actual cost sharing by or between utilities associated with or otherwise contacted concerning the Project and/or [SLTH], including by and between Seattle City Light [(SCL)], [PSE] and BPA, including draft and final agreements, e-mail correspondence, and invoices.
>
> Documents requested also include those related to the Project and/or [SLTH] which were transmitted between or among SCL and any other agencies, energy [companies] and other companies, and/or non-profit consortia, including, but not limited to, BPA, [PSE], other Seattle City departments, ColumbiaGrid, FLRC, and the Western Electricity Coordinating Council. Further, all documents, electronic or otherwise, draft and final, including e-mail correspondence, are requested concerning any and all communications between [PSE] and [SCL] with respect to

any use or sharing of [SCL]'s rights of way and/or easements and/or power lines which are located on the Eastside.

Please include in your search and production of these documents any and all load and/or reliability forecasts for the future electricity needs of the Eastside[,] or any portion of it[,] in your possession, regardless of by whom made or for what purpose.

Please consider the relevant time period for these requests to be from 2008 to the present."

Response

A search of the electronic records in BPA's Transmission Sales and Transmission Project Management departments has been conducted and records responsive to your request were gathered. In an effort to accommodate the ongoing statutorily required review of the volume of records gathered, and provide those records expediently, we have been reviewing and releasing records to you in partial increments. Previously, BPA provided you records responsive to your request on April 30, 2015, May 14, 2015 and June 8, 2015.

BPA's response effort for your FOIA request is now complete. BPA's response effort for your FOIA request included a review by FOIA counsel and Transmission personnel for the application of potentially relevant exemptions under the FOIA. Following that extensive records collection and review effort, BPA has assembled the accompanying records set in response to the above request. That set of records is comprised of a total of 967 pages. Of those 967 pages, 14 pages contain redactions in accord with 5 U.S.C. § 552(b)(5) (Exemption 5). Additionally, of those 967 pages, 29 pages contain redactions in accord with 5 U.S.C. § 552(b)(6) (Exemption 6).

Records Subject to Discretionary Release

Please be aware that while responding to your requests, and in reviewing the responsive agency records for potential redaction under Exemption 5, BPA has been at all times mindful of Attorney General Holder's Memorandum for Heads of Executive Departments and Agencies Concerning the Freedom of Information Act, 74 Fed. Reg. 51879 (Oct. 8, 2009) (Holder Memo), directing all Federal agencies to adopt a presumption in favor of disclosure. In accord with the Holder Memo, records protected by Exemption 5's deliberative process privilege may be discretionarily released. BPA has considered and approved the discretionary release of most of the information in the responsive records set that would otherwise be arguably subject to Exemption 5.

Records Subject to Exemption 6

Exemption 6 of the FOIA protects information about individuals in "personnel and medical files and similar files" when the disclosure of such information "would constitute a clearly unwarranted invasion of personal privacy." The application of Exemption 6 requires balancing the public's interest in acquiring the information against the individual's privacy interests. BPA asserts Exemption 6 to withhold the personal cell phone information on the following pages: 5 8 9 90 173 155 318 571 686 739 741 758-762 768 823

825 915-916 919 921 925 927 928 930 934 950. BPA can find no public interest in the forgoing information and we have therefore redacted it under Exemption 6.

Please be aware that the right of privacy asserted belongs to the individual, not to the agency, and information that falls under Exemption 6 cannot be discretionarily released. Therefore, BPA did not analyze the forgoing information under the discretionary release guidelines found in the Holder Memo.

Fees

There are no fees associated with BPA's response to your request.

Appeal

Pursuant to Department of Energy FOIA regulations at 10 C.F.R. § 1004.8, you may administratively appeal this response in writing within 30 calendar days. If you choose to appeal, include the following:

(1) The nature of your appeal - denial of records, partial denial of records, adequacy of search, or denial of fee waiver; and,
(2) any legal authorities relied upon to support the appeal; and,
(3) a copy of the determination letter.

Clearly mark both your letter and envelope with the words "FOIA Appeal," and direct it to:

Director, Office of Hearings and Appeals
Department of Energy
1000 Independence Avenue SW
Washington DC 20585-1615

If you have questions about this communication, you may contact James King, (CorSource Technology Group, Inc.), assigned to BPA FOIA Office, at 503-230-7621.

Sincerely,

C. M. Frost
Freedom of Information/Privacy Act Officer

From: White,Anthony G - PGPL-5
To: Pendergrass,Richard M - PGP-5
Cc: Koehler,Birgit G - PGPL-5
Subject: FW: PSANI Letter
Date: Thursday, October 29, 2009 8:37:28 AM
Attachments: PSANI_redis_agmt_communication.doc

As we discussed, the only suggestion I would make is that they should be cc:ing the Coordinator and Secretary on PSANI matters in the future.

From: Pendergrass,Richard M - PGP-5
Sent: Thursday, October 29, 2009 7:57 AM
To: White,Anthony G - PGPL-5
Cc: Koehler,Birgit G - PGPL-5
Subject: FW: PSANI Letter

Read this, and come by at 8:30 to discuss

From: Gendron,Mark O - P-6
Sent: Thursday, October 29, 2009 7:55 AM
To: Pendergrass,Richard M - PGP-5
Subject: FW: PSANI Letter

From: Silverstein,Brian L - T-DITT2
Sent: Tuesday, October 27, 2009 8:03 PM
To: Gendron,Mark O - P-6; Oliver,Stephen R - PG-5; Cannady,Samuel D - PT-5
Subject: FW: PSANI Letter

Any comments? I would like to send this on Thursday

tnx
brian

From: Silverstein,Brian L - T-DITT2
Sent: Tuesday, October 27, 2009 9:38 AM
To: Wright,Stephen J - A-7; Burns,Allen L - D-7; Decker,Anita J - K-7; Juj,Hardev S - TP-DITT-2; Ehli,Cathy L - TS-DITT-2; Thomas,Randi R - TO-DITT2; Jensen,Mary K - LT-7
Cc: Timberman,Toni L - TSE-TPP-2; Millar,Susan B - TS-DITT-2
Subject: PSANI Letter

Attached is a letter I intend to send to Seattle, Puget and Snohmish regarding ending of the PSANI Redispatch Pilot on November 1. This will not be a suprprise to the parties. Please let me know if you have any comments

thanks
Brian

Department of Energy

Bonneville Power Administration
P.O. Box 491
Vancouver, Washington 98666-0491

TRANSMISSION SERVICES

In reply refer to: TS

Jorge Carrasco	Kimberly Harris	Steve Klein
Superintendant	Exec Vice President	General Manger
Seattle City Light	Puget Sound Energy, Inc.	Snohomish Co. PUD
PO Box 34023	PO Box 97034	PO Box 1107
Seattle, WA 98124-4023	Bellevue, WA 98009-9734	Everett, WA 98206

PSANI Participants:

After our meeting on June 5, 2009, the Puget Sound Area Customers agreed to an amendment extending the existing Puget Sound Area and Northern Intertie (PSANI) Redispatch Pilot Agreement, Contract No. 05TX-11894, if BPA was willing to explore compensation for stand-by capacity payments. I indicated that BPA might consider some kind of compensation for generation that was above an established minimum generation level. I also noted at that time, that the assumptions for generation levels agreed to between BPA and the area utilities for long-term planning purposes included: Puget, 650 MW; Seattle, 450 MW; and Snohomish, 125 MW. At a meeting on July 21, 2009, BPA and Customer representatives met to discuss a strawman proposal for capacity payments developed by the Customers and their respective views on minimum generation levels. The parties' expectations regarding minimum generation levels varied widely and there were also different views on the appropriate advance period for capacity reservations.

For the remainder of the summer, BPA staff continued to evaluate options. As of September 2009, I directed staff to work with Puget Sound Area Transmission Operators and Planners to agree on appropriate generation levels in the area that would form the basis for planning studies and planning for reinforcements to the interconnected system by each utility and in the various regional planning forums. I expected that after reaching agreement on such generation levels, BPA and the Puget Sound Area Customers could re-engage in discussions on whether to continue with some kind of redispatch arrangement, including whether and how to compensate for capacity reservations. We expected that negotiation on these issues would extend well beyond October 31, 2009. BPA therefore was willing to agree to another extension, and continue to operate under the terms of the existing PSANI Redispatch Pilot Agreement until we reached agreement on the above issues.

I had the opportunity to meet with Seattle in mid-September and informed them of this approach. Seattle indicated that they had no interest in continuing with the current PSANI Redispatch Pilot Program. I understand that Puget holds a similar view. Without a commitment from all of the PSANI Customer Participants to an extension, we will terminate the PSANI Redispatch Pilot

Agreement, as of November 1, 2009. From that point, BPA will operate under the commercial arrangements in place, including the applicable PSANI Curtailment procedures, as they may be revised from time to time.

We will continue to work with your organizations individually and through Columbia Grid to examine opportunities to reinforce the interconnected system to reduce exposure to PSANI events. Perhaps in the future we may also find a mutually agreeable framework for more effective operating protocols.

I want to take this opportunity to thank each of you for your participation in the PSANI Redispatch Pilot Programs dating back to December 2004. I believe the programs that we implemented under the various pilot agreements, gave us greater insight into the complicated challenges of the interconnected systems in the Puget Sound Area and also allowed us to learn more about redispatch and curtailment tools for managing congestion in that area.

If you have questions please feel free to contact me at 360-418-2122. For questions on the planning studies please refer them to Hardev Juj, Acting Vice President for Transmission Planning & Asset Management, at 360-418-8981. If you have questions concerning the close out of the PSANI Redispatch Pilot Agreement, or the PSANI Curtailment procedures, please refer those questions to Susan Millar, at 360-418-2378.

Sincerely,

Brian Silverstein
Senior Vice President
Transmission Services

cc:
Mr. Steve Kerns, Seattle City Light
Mr. Dave Milles, Puget Sound Energy, Inc.
Dana Toulson, Snohomish Co. PUD

bcc:
R. Thomas – TO-Ditt2
R. Ellison – TOD-Ditt1
T. Loepker – TOD-Ditt1
J. Anasis – TOT-Ditt2
E. Elizeh – TOT-Ditt2
H. Juj – TP-Ditt2
M. Rodrigues – TPP-OPP-3
B. Tesema – TPP-OPP-3
C. Ehli – TS-Ditt2
T. Timberman – TSE-TPP-2
S. Holden-Baker – TSS-Ditt1
Official File – TS (MN)

SMillar:hae:2378:10/19/2009(J:\TS\Millar\PSANI\PSANI_redis_agmt_communication.doc)

From: Hyde,John M - PGPL-5
To: Pendergrass,Richard M - PGP-5; White,Anthony G - PGPL-5; Koehler,Birgit G - PGPL-5; MacKay,Robyn L - PGPO-5; Bauer,Margaret A - PGPO-5
Subject: LCA 1 mw power
Date: Thursday, December 17, 2009 1:34:05 PM

Pam told me today that 1 hour of the LCA 1 MW payment from Canada the the U.S. was cut during the recent PSANI.
She asked me if there were any procedures in the LCA or POP or the DOP about how to handle this, and I said best of my recall is no. We left those details to be decided by scheduling staff.

She said she would propose to BC Hydro that the 1 MWH BPA did not receive would be resceduled to be delivered to BPA on the same hour and day one week later.

John M. Hyde, P.E
Technical Lead for the Columbia River Treaty 2014/2024 Review,

and Member, Columbia River Treaty Operating Committee
Bonnneville Power Administration,

Power & Operations Planning, Regional Coordination - PGPL

905 NE 11th Ave. or PO Box 3621, Portland Oregon 97208
Office:503-230-5331, (b) (6) [redacted] *Fax:503-230-3939*

From: Oliver,Stephen R - PG-5
To: Pendergrass,Richard M - PGP-5; Koehler,Birgit G - PGPL-5
Subject: FW: BPA"s response to request for details on 3 November 2009 PSANI curtailments
Date: Wednesday, May 05, 2010 8:56:33 AM

Stephen R. Oliver
Vice President, Generation Asset Management
Bonneville Power Administration
Ph: (503) 230-7503 or (503) 230-4090
FAX: (503) 230-3986
-----Original Message-----
From: White,Anthony G - PGPL-5
Sent: Wednesday, May 05, 2010 7:05 AM
To: Oliver,Stephen R - PG-5
Subject: RE: BPA's response to request for details on 3 November 2009 PSANI curtailments

I was directed by the Operating Committee [action item #3 from the 7 Apr 10 CRTOC meeting] to receive and understand the Canadian view behind the 3 Nov 09 curtailment event. Barton and Barton are members of the Operating Committee. I cc'd you because you had asked that BPAT be in on the briefing, which they had received at earlier times as I indicated.

The CRTOC is charged with overseeing operational aspects of Treaty implementation; PSANI is an operational aspect of Treaty implementation.

-----Original Message-----
From: Oliver,Stephen R - PG-5
Sent: Tuesday, May 04, 2010 4:37 PM
To: White,Anthony G - PGPL-5; Pendergrass,Richard M - PGP-5; Hyde,John M - PGPL-5
Subject: RE: BPA's response to request for details on 3 November 2009 PSANI curtailments

Curious ... Why was this sent to Barton and Barton at USACE? Are they involved in PSANI in any way?

-----Original Message-----
From: White,Anthony G - PGPL-5
Sent: Tuesday, May 04, 2010 9:33 AM
To: Pendergrass,Richard M - PGP-5; Hyde,John M - PGPL-5; 'Barton, Jim - USACE'; 'steven.b.barton@usace.army.mil'
Cc: Oliver,Stephen R - PG-5
Subject: FW: BPA's response to request for details on 3 November 2009 PSANI curtailments

Atttached is a paper prepared by the Powerex expert on Northern Intertie matters (he has worked with PSANI and other transmission issues for almost 10 years), outlining his explanation of the 3 Nov 09 curtailments. In it he reviews the PSANI system of using nomograms - graphs plotting temperature, loads and generation patterns in the Northern Puget Sound area to determine how much line loading the NI will take.

He concludes that the nomogram system is logical but has a blind spot when nomograms dip into negative territory when the PSANI is already armed, in that dispatchers don't look at the graphs but at tables that "round" negative numbers up to zero. He is trying to bring this to the attention of the region's chief utility planners, operators and executives and then ultimately to WECC and NERC.

The presentation has already been made in March and April 2010 to ColumbiaGrid, PSE, Seattle, Snohomish, and BPAT's James Randall, James O'Brien, and Susan Millar.

-----Original Message-----

From: Robinson, Doug A. [mailto:Douglas.Robinson@bchydro.com]
Sent: Thursday, April 22, 2010 2:36 PM
To: White,Anthony G - PGPL-5
Cc: Ketchum, Kelvin; Dobson-Mack, Gordon
Subject: FW: BPA's response to request for details on 3 November 2009 PSANI curtailments

Tony: Here is the paper from Gordon D-M, as promised. If you are coming up on 3 May, we would be happy to review the material with you. Gordon and I have set aside a 12:30 start time in my office if that would be convenient. Let me know your plans / interest / availability.

Doug

-----Original Message-----
From: Dobson-Mack, Gordon
Sent: 2010, April 22 2:28 PM
To: Robinson, Doug A.
Subject: RE: BPA's response to request for details on 3 November 2009 PSANI curtailments

Doug,

Please find attached the updated version of my 3 November 2009 presentation. I would be happy to go through it with you and Tony, either in person or via Webex.

Regards, Gordon

From: Fitzsimmons,David A (BPA) - TSE-TPP-2
To: Leathley,Kimberly A (BPA) - F-2; Timberman,Toni L (BPA) - TSE-TPP-2; Altman,Brian D (BPA) - TSE-TPP-2
Subject: Re: A bit of news from Customers
Date: Friday, September 27, 2013 6:00:26 PM

Interesting. Thanks for sending. This out

David Fitzsimmons
Transmission Sales Manager
Bonneville Power Administration

Office. 360.619.6005
(b) (6) [redacted]
Fax. 360.619.6940

From: Leathley,Kimberly A (BPA) - TS-DITT-2-A
Sent: Friday, September 27, 2013 05:58 PM Pacific Standard Time
To: Timberman,Toni L (BPA) - TSE-TPP-2; Fitzsimmons,David A (BPA) - TSE-TPP-2; Altman,Brian D (BPA) - TSE-TPP-2
Subject: Fw: A bit of news from Customers

From: Bekkedahl,Larry N (BPA) - T-DITT2
Sent: Friday, September 27, 2013 05:47 PM
To: Mainzer,Elliot E (BPA) - D-7; Andrews,Claudia R (BPA) - K-7; TBL VPs
Subject: A bit of news from Customers

Northwestern announced today that they purchase the Montana generation from PPL. This is about 630MW that they used to own before deregulation.

David Mills at Puget Sound Energy notified me that they will moving ahead with the double circuit 230kV line in Bellvue area. They are also going to be delaying their participation in the Lakeside transformer addition under the PASANI agreement.

Have a great weekend.

Larry

From: Timberman,Toni L (BPA) - TSE-TPP-2
To: "Uzma Siddiqi (uzma.siddiqi@seattle.gov)"
Subject: PSANI Project Update?
Date: Wednesday, October 02, 2013 11:28:00 AM

Hi Uzma,
I understand there was a "PSANI Projects" project manager meeting a couple of weeks ago. I heard that Seattle had cancelled one of its projects, and wanted to find out more.
Could you please give me a call?
Thanks,
Toni

Toni L. Timberman
Senior Transmission Account Executive
Bonneville Power Administration

(360) 619-6015 office
(b) (6) [redacted]
tltimberman@bpa.gov

From:	Custer,Leonard L (BPA) - TELC-TPP-3
To:	Wilson,Jenny (BPA) - TPP-OPP-3; Cathcart,David A (BPA) - TPP-OPP-3
Cc:	Marleau,Michael L (BPA) - TEP-TPP-1; Dorf, Angela; Timberman,Toni L (BPA) - TSE-TPP-2; Gentry,Natasha A (BPA) - TELC-TPP-3; Tyson,Ivy L (BPA) - TPS-TPP-1; O"Claire,David E (BPA) - TELD-TPP-3; Ashburn,Tyler (BPA) - TELC-TPP-3; Ierulli Jr,Vince (BPA) - TELC-TPP-3; Struck,Matthew J (CONTR) - TELC-TPP-3; Grover,John J (BPA) - TELP-TPP-3
Subject:	Bothell-SnoKing 1 and 2 Reconductors
Date:	Thursday, October 03, 2013 3:42:41 PM

Jenny and Dave,

Reconductoring the BPA Bothell-SnoKing 1 line with ACSR/TW Deschutes will give a 1900A rating at -5C ambient for 100C MOT. Structure 3/3 a 4A1 steel suspension tower will need to be moved BOL 50' with new legs and footings to remove impairments.

Reconductoring the BPA Bothell-SnoKing 2 line with AAC/TW Hood conductor will give a 1900A rating at -5C ambient for 100C MOT. Wood structure 3/7 will need to be replaced with a pole 10' longer and a higher class pole for loading to remove impairments.

This preliminary design is good for estimating, but a final design of both lines will have to be performed when we receive project Work Orders.

Thanks,
Len

From: Timberman,Toni L (BPA) - TSE-TPP-2
To: Tesema,Berhanu K (BPA) - TPP-OPP-3; Cathcart,David A (BPA) - TPP-OPP-3
Subject: PSANI update - need your review -
Date: Thursday, October 03, 2013 4:49:00 PM

Berhanu and Dave, please review and let me know your comments. I need to submit this on Friday, so before noon would be best.

Thanks,
Toni

_____

In January of 2012 BPA, Puget and Seattle executed a Memorandum of Agreement in which commitments were made to build certain transmission reinforcement projects in the Puget Sound area, for the purpose of relieving congestion and reducing the number and severity of transmission curtailments. The cost of the Seattle and Puget projects will be allocated roughly 1/3 to each of the Parties, with BPA additionally paying the full cost of the BPA projects. Efforts are now ramping up to proceed, and the Project Managers have been meeting to more clearly define and coordinate the scope, design and schedule.

Seattle is on track to complete the Bothell to SnoKing Reconductor Project, the Broad Street Inductor Project, the North Downtown Inductor Project and the Delridge to Duwamish Reconductor Project in 2016. BPA has a role in the Bothell to SnoKing project, needing to reconductor our ½-mile owned sections of both the Bothell-SnoKing #1 and #2 230 kV lines, including modification of two structures and replacement of disconnect switches at SnoKing.

Puget Sound Energy is proceeding with the Sammamish to Lakeside to Talbot Rebuild Project, to be completed in 2017. They have delayed the Lakeside 230 kV Transformer Addition Project. This project is located in downtown Bellevue and is encountering a lot of public resistance.

BPA, in addition to the Bothell-SnoKing work, is proceeding with development of the plan of service for addition of a 500/230 kV transformer at Raver, including reconfiguration of the ?????? transmission lines. This work is scheduled for xxxx completion. *Uzma mentioned that a new reactor will be installed as part of this project, but that is just additional work to replace the one that burned, and not an addition to the PSANI projects, correct? Please verify.*

BPA is also scoping the Northern Intertie RAS Improvement Project, replacing the existing equipment and ensuring that it meets WECC and NERC compliance requirements. There has been some resistance from BC Hydro regarding expanding the scope of the RAS to include additional contingencies that were identified in the Columbia Grid Study, but discussions between our respective Planning staff will hopefully lead to the desired outcome. The new equipment being installed by BPA will include the flexibility to add the contingencies once agreement is reached with BC Hydro. The Northern Intertie RAS Improvement Project is scheduled to be completed in 2014???

From: Cathcart,David A (BPA) - TPP-OPP-3
To: Timberman,Toni L (BPA) - TSE-TPP-2; Tesema,Berhanu K (BPA) - TPP-OPP-3
Subject: RE: PSANI update - need your review -
Date: Thursday, October 03, 2013 5:17:04 PM

I've made some edits. Who is the audience for this update?
1) Len's scope estimates for Bothell-Snoking are **PRELIM** at this point; Line Design may identify other structures that need reinforcement once the WO is issued and Full Design commences. Do we really want to say how many structures are involved at this stage of the scoping?
2) The reactor at Raver is a replacement **NOT** an expansion/addition. It was due to the fire and is **unrelated** to the Raver Transformer project.
3) The NI RAS PRD is **NOT** for WECC/NERC compliance but for BPA Operations and Design Policies/Standards for RAS and Communications, in addition to aging equipment replacement. The CTG additions to the RAS Algorithm would then reduce NI curtailment exposures.

From: Timberman,Toni L (BPA) - TSE-TPP-2
Sent: Thursday, October 03, 2013 4:50 PM
To: Tesema,Berhanu K (BPA) - TPP-OPP-3; Cathcart,David A (BPA) - TPP-OPP-3
Subject: PSANI update - need your review -

Berhanu and Dave, please review and let me know your comments. I need to submit this on Friday, so before noon would be best.

Thanks,
Toni

_____

In January of 2012 BPA, Puget and Seattle executed a Memorandum of Agreement in which commitments were made to build certain transmission reinforcement projects in the Puget Sound area, for the purpose of relieving congestion and reducing the number and severity of transmission curtailments. The cost of the Seattle and Puget projects will be allocated roughly 1/3 to each of the Parties, with BPA additionally paying the full cost of the BPA projects. Efforts are now ramping up to proceed, and the Project Managers have been meeting to more clearly define and coordinate the scope, design and schedule.

Seattle is on track to complete the Bothell to SnoKing Reconductor Project, the Broad Street Inductor Project, the North Downtown Inductor Project and the Delridge to Duwamish Reconductor Project in 2016. BPA has a role in the Bothell to SnoKing project, needing to reconductor our ½-mile owned sections of both the Bothell-SnoKing #1 and #2 230 kV lines, including modification of two structures and replacement of disconnect switches at SnoKing.

Puget Sound Energy is proceeding with the Sammamish to Lakeside to Talbot Rebuild Project, to be completed in 2017. They have delayed the Lakeside 230 kV Transformer Addition Project. This project is located in downtown Bellevue and is encountering a lot of public resistance.

BPA, in addition to the Bothell-SnoKing work, is proceeding with development of the plan of service for addition of a 500/230 kV transformer at Raver, including reconfiguration of the **Raver-Tacoma #1 & #2** transmission lines and additional reconfigurations at Covington Substation. This work is scheduled for **2016** completion. *Uzma mentioned that a new reactor will be installed as part of this*

project, but that is just additional work to replace the one that burned, and not an addition to the PSANI projects, correct? Please verify.

BPA is also scoping the Northern Intertie RAS Improvement Project, replacing the existing communication and relaying equipment and ensuring that it meets current BPA Design and Operations Standards for Communications, Relaying, and RAS ~~meets WECC and NERC compliance requirements~~. There has been some resistance from BC Hydro regarding expanding the scope of the RAS to include additional contingencies that were identified in the Columbia Grid Study, but discussions between our respective Planning staff will hopefully lead to the desired outcome. The new equipment being installed by BPA will include the flexibility to add the contingencies once agreement is reached with BC Hydro. The ~~Northern Intertie RAS Improvement Project~~ equipment upgrades are tentatively scheduled to be completed in **2016**

From: Siddiqi, Uzma
To: Timberman,Toni L (BPA) - TSE-TPP-2
Subject: RE: Bothell-SnoKing & PSANI Projects
Date: Thursday, October 03, 2013 9:15:02 PM

I'll call you in the a.m.
Just some thoughts...(in blue--below)

From: Timberman,Toni L (BPA) - TSE-TPP-2 [tltimberman@bpa.gov]
Sent: Thursday, October 03, 2013 2:58 PM
To: Siddiqi, Uzma
Subject: Bothell-SnoKing & PSANI Projects

Hi Uzma,

I just left a meeting with Planning, Line Design and the Project Managers, including Angela, at which the Bothell-SnoKing project was discussed. Dave Cathcart was there and I was able to get answers for most, if not all, of your concerns. (Excellent! My basic concern is that the process be smooth and that the projects get built--on time and near the planning level estimates.)

I just chatted with Berhanu – he was not aware that Mike Marleau, the Project Manager, had not been able to participate in the PM meeting several weeks ago and said that he would have gone if he had known Mike would not be there. Either Berhanu or I will be at future meetings – please include us on the e-mails. (Will do--could you give your name/contact info to Leann Kostek at PSE also)

Regarding BPA building its own section of the line, that has always been a BPA policy, and evidently we have always done this and have always used a different conductor than Seattle, so they were confused about your concern. (Typically a "different conductor" might mean Drake vs. Mallard--both 795kcmil with similar properties. In this case the concern is CTC high temp vs. 3M high temp. Completely different type "wire" -- as an example of a difference, one has a carbon core and the other a aluminum oxide core.)

I did mention your concerns about the different hardware at the change of ownership on the SCL tower. They did not think there was an issue and wanted to discuss with you. Would you like me to set up a conf. call? Berhanu and I would be on the call with the PM and Len Custer. (Yes please.)

Regarding the NI RAS, BPA plans to complete its part, replacing our equipment and including the capability to expand the RAS as described in the Columbia Grid report. BC Hydro is not willing at this time to expand the RAS, but discussions are continuing between BPA Planning staff and theirs. I don't know the reason, but in the past there has been a very strong resistance to expand the RAS or lower the arming level because they believe they are protecting the Puget Sound area by tripping their generators, and not seeing any benefit. Their position has always been that more transmission should be built rather than expanding the RAS, although I think this time Powerex would like the RAS expanded. (Well, the NI RAS provides some of the benefit per the CG report--I assume if it is not implemented, there will be reduced PSANI benefits.)

I don't see anywhere the rating goal of the line re-build. What is your understanding? (The rating

goal is embedded pretty deeply in the CG report. One of the action items from the Feb 2013 meeting was a document that stated the goal -- Do you want me to forward that to you or would you prefer to get it from an internal BPA person so that you know that you are all using the same document?)

Give me a call when you get a chance and we can chat about this. (I'll call in the a.m. I was in meetings all afternoon...)

Talk to you soon,
Toni

Toni L. Timberman
Senior Transmission Account Executive
Bonneville Power Administration

(360) 619-6015 office
(b) (6) [redacted]
tltimberman@bpa.gov

From: Tesema,Berhanu K (BPA) - TPP-OPP-3
To: Timberman,Toni L (BPA) - TSE-TPP-2; Cathcart,David A (BPA) - TPP-OPP-3
Subject: RE: PSANI update - need your review -
Date: Friday, October 04, 2013 9:08:40 AM

Toni,
The BPA project manager for the PSANI projects is Mike Marleau.

Berhanu Tesema
BPA Transmission Services
Transmission Planning -TPP/DITT2
bktesema@bpa.gov
360-619-6819

From: Timberman,Toni L (BPA) - TSE-TPP-2
Sent: Friday, October 04, 2013 8:54 AM
To: Cathcart,David A (BPA) - TPP-OPP-3; Tesema,Berhanu K (BPA) - TPP-OPP-3
Subject: RE: PSANI update - need your review -

Thanks, Dave. See my comments and edits below.

From: Cathcart,David A (BPA) - TPP-OPP-3
Sent: Thursday, October 03, 2013 5:17 PM
To: Timberman,Toni L (BPA) - TSE-TPP-2; Tesema,Berhanu K (BPA) - TPP-OPP-3
Subject: RE: PSANI update - need your review -

I've made some edits. Who is the audience for this update? This is intended to be included in the report to the Administrator (all executives) that the AEs prepare every two weeks. I don't want to include too much detail, because I know the plans will likely be modified as they mature, but I wanted to give a sense of where all parties are with their projects and the expected energization so our financial folks can be prepared to pay upon completion of PSE and SCL projects.
1) Len's scope estimates for Bothell-Snoking are **PRELIM** at this point; Line Design may identify other structures that need reinforcement once the WO is issued and Full Design commences. Do we really want to say how many structures are involved at this stage of the scoping? I mentioned two structures for the Bothell-SnoKing work because those were certain at this time, but did not include the detail of the disconnects and possibly CT replacement. Per your suggestion, I deleted this part.
2) The reactor at Raver is a replacement **NOT** an expansion/addition. It was due to the fire and is **unrelated** to the Raver Transformer project. That's what I thought…will not mention that project in my report.
3) The NI RAS PRD is **NOT** for WECC/NERC compliance but for BPA Operations and Design Policies/Standards for RAS and Communications, in addition to aging equipment replacement. The CTG additions to the RAS Algorithm would then reduce NI curtailment exposures.

From: Timberman,Toni L (BPA) - TSE-TPP-2
Sent: Thursday, October 03, 2013 4:50 PM
To: Tesema,Berhanu K (BPA) - TPP-OPP-3; Cathcart,David A (BPA) - TPP-OPP-3
Subject: PSANI update - need your review -

Berhanu and Dave, please review and let me know your comments. I need to submit this on Friday,

so before noon would be best.

Thanks,
Toni

_____

In January of 2012 BPA, Puget and Seattle executed a Memorandum of Agreement in which commitments were made to build certain transmission reinforcement projects in the Puget Sound area, for the purpose of relieving congestion and reducing the number and severity of transmission curtailments. The cost of the Seattle and Puget projects will be allocated roughly 1/3 to each of the Parties, with BPA additionally paying the full cost of the BPA projects. Efforts are now ramping up to proceed, and the Project Managers have been meeting to more clearly define and coordinate the scope, design and schedule.

Seattle is on track to complete the Bothell to SnoKing Reconductor Project, the Broad Street Inductor Project, the North Downtown Inductor Project and the Delridge to Duwamish Reconductor Project in 2016. BPA has a role in the Bothell to SnoKing project, needing to reconductor our ½-mile owned sections of both the Bothell-SnoKing #1 and #2 230 kV lines.~~, including modification of two structures and replacement of disconnect switches at SnoKing~~.

Puget Sound Energy is proceeding with the Sammamish to Lakeside to Talbot Rebuild Project, to be completed in 2017. They have delayed the Lakeside 230 kV Transformer Addition Project. This project is located in downtown Bellevue and is encountering a lot of public resistance.

BPA, in addition to the Bothell-SnoKing work, is proceeding with development of the plan of service for addition of a 500/230 kV transformer at Raver, including reconfiguration of the **Raver-Tacoma #1 & #2** transmission lines and additional reconfigurations at Covington Substation. This work is scheduled for **2016** completion. ~~*Uzma mentioned that a new reactor will be installed as part of this project, but that is just additional work to replace the one that burned, and not an addition to the PSANI projects, correct? Please verify.*~~

BPA is also scoping the Northern Intertie RAS Improvement Project, replacing the existing communication and relaying equipment and ensuring that it meets current BPA Design and Operations Standards for Communications, Relaying, and RAS ~~meets WECC and NERC compliance requirements~~. There has been some resistance from BC Hydro regarding expanding the scope of the RAS to include additional contingencies that were identified in the Columbia Grid Study, but discussions between our respective Planning staff will hopefully lead to the desired outcome. The new equipment being installed by BPA will include the flexibility to add the contingencies once agreement is reached with BC Hydro. The ~~Northern Intertie RAS Improvement Project~~ equipment upgrades are tentatively scheduled to be completed in **2016**

From:	Timberman,Toni L (BPA) - TSE-TPP-2
To:	Tesema,Berhanu K (BPA) - TPP-OPP-3
Subject:	RE: PSANI update - need your review -
Date:	Friday, October 04, 2013 9:12:00 AM

Ok – thanks.

From: Tesema,Berhanu K (BPA) - TPP-OPP-3
Sent: Friday, October 04, 2013 9:12 AM
To: Timberman,Toni L (BPA) - TSE-TPP-2
Subject: RE: PSANI update - need your review -

I just heard your voice mail and wnated to let you know. It is upto you to state it or not.

Berhanu Tesema
BPA Transmission Services
Transmission Planning -TPP/DITT2
bktesema@bpa.gov
360-619-6819

From: Timberman,Toni L (BPA) - TSE-TPP-2
Sent: Friday, October 04, 2013 9:09 AM
To: Tesema,Berhanu K (BPA) - TPP-OPP-3
Subject: RE: PSANI update - need your review -

I know – do you want me to state that in this report?

From: Tesema,Berhanu K (BPA) - TPP-OPP-3
Sent: Friday, October 04, 2013 9:09 AM
To: Timberman,Toni L (BPA) - TSE-TPP-2; Cathcart,David A (BPA) - TPP-OPP-3
Subject: RE: PSANI update - need your review -

Toni,
The BPA project manager for the PSANI projects is Mike Marleau.

Berhanu Tesema
BPA Transmission Services
Transmission Planning -TPP/DITT2
bktesema@bpa.gov
360-619-6819

From: Timberman,Toni L (BPA) - TSE-TPP-2
Sent: Friday, October 04, 2013 8:54 AM
To: Cathcart,David A (BPA) - TPP-OPP-3; Tesema,Berhanu K (BPA) - TPP-OPP-3
Subject: RE: PSANI update - need your review -

Thanks, Dave. See my comments and edits below.

From: Cathcart,David A (BPA) - TPP-OPP-3
Sent: Thursday, October 03, 2013 5:17 PM
To: Timberman,Toni L (BPA) - TSE-TPP-2; Tesema,Berhanu K (BPA) - TPP-OPP-3
Subject: RE: PSANI update - need your review -

I've made some edits. Who is the audience for this update? This is intended to be included in the report to the Administrator (all executives) that the AEs prepare every two weeks. I don't want to include too much detail, because I know the plans will likely be modified as they mature, but I wanted to give a sense of where all parties are with their projects and the expected energization so our financial folks can be prepared to pay upon completion of PSE and SCL projects.
1) Len's scope estimates for Bothell-Snoking are **PRELIM** at this point; Line Design may identify other structures that need reinforcement once the WO is issued and Full Design commences. Do we really want to say how many structures are involved at this stage of the scoping? I mentioned two structures for the Bothell-SnoKing work because those were certain at this time, but did not include the detail of the disconnects and possibly CT replacement. Per your suggestion, I deleted this part.
2) The reactor at Raver is a replacement **NOT** an expansion/addition. It was due to the fire and is **unrelated** to the Raver Transformer project. That's what I thought…will not mention that project in my report.
3) The NI RAS PRD is **NOT** for WECC/NERC compliance but for BPA Operations and Design Policies/Standards for RAS and Communications, in addition to aging equipment replacement. The CTG additions to the RAS Algorithm would then reduce NI curtailment exposures.

From: Timberman,Toni L (BPA) - TSE-TPP-2
Sent: Thursday, October 03, 2013 4:50 PM
To: Tesema,Berhanu K (BPA) - TPP-OPP-3; Cathcart,David A (BPA) - TPP-OPP-3
Subject: PSANI update - need your review -

Berhanu and Dave, please review and let me know your comments. I need to submit this on Friday, so before noon would be best.

Thanks,
Toni

In January of 2012 BPA, Puget and Seattle executed a Memorandum of Agreement in which commitments were made to build certain transmission reinforcement projects in the Puget Sound area, for the purpose of relieving congestion and reducing the number and severity of transmission curtailments. The cost of the Seattle and Puget projects will be allocated roughly 1/3 to each of the Parties, with BPA additionally paying the full cost of the BPA projects. Efforts are now ramping up to proceed, and the Project Managers have been meeting to more clearly define and coordinate the scope, design and schedule.

Seattle is on track to complete the Bothell to SnoKing Reconductor Project, the Broad Street Inductor Project, the North Downtown Inductor Project and the Delridge to Duwamish Reconductor Project in 2016. BPA has a role in the Bothell to SnoKing project, needing to reconductor our ½-mile owned sections of both the Bothell-SnoKing #1 and #2 230 kV lines.~~, including modification of two structures and replacement of disconnect switches at SnoKing~~.

Puget Sound Energy is proceeding with the Sammamish to Lakeside to Talbot Rebuild Project, to be completed in 2017. They have delayed the Lakeside 230 kV Transformer Addition Project. This project is located in downtown Bellevue and is encountering a lot of public resistance.

BPA, in addition to the Bothell-SnoKing work, is proceeding with development of the plan of service for addition of a 500/230 kV transformer at Raver, including reconfiguration of the **Raver-Tacoma #1 & #2** transmission lines and additional reconfigurations at Covington Substation. This work is scheduled for **2016** completion. ~~*Uzma mentioned that a new reactor will be installed as part of this project, but that is just additional work to replace the one that burned, and not an addition to the PSANI projects, correct? Please verify.*~~

BPA is also scoping the Northern Intertie RAS Improvement Project, replacing the existing communication and relaying equipment and ensuring that it meets current BPA Design and Operations Standards for Communications, Relaying, and RAS ~~meets WECC and NERC compliance requirements~~. There has been some resistance from BC Hydro regarding expanding the scope of the RAS to include additional contingencies that were identified in the Columbia Grid Study, but discussions between our respective Planning staff will hopefully lead to the desired outcome. The new equipment being installed by BPA will include the flexibility to add the contingencies once agreement is reached with BC Hydro. The ~~Northern Intertie RAS Improvement Project~~ equipment upgrades are tentatively scheduled to be completed in **2016**

From: Tesema,Berhanu K (BPA) - TPP-OPP-3
To: Timberman,Toni L (BPA) - TSE-TPP-2
Subject: RE: PSANI update - need your review -
Date: Friday, October 04, 2013 9:39:18 AM

I think it all the PSANI projects.

Berhanu Tesema
BPA Transmission Services
Transmission Planning -TPP/DITT2
bktesema@bpa.gov
360-619-6819

From: Timberman,Toni L (BPA) - TSE-TPP-2
Sent: Friday, October 04, 2013 9:37 AM
To: Tesema,Berhanu K (BPA) - TPP-OPP-3
Subject: RE: PSANI update - need your review -

Is Mike the PM for all the PSANI Projects or just the Bothell-SnoKing?

From: Tesema,Berhanu K (BPA) - TPP-OPP-3
Sent: Friday, October 04, 2013 9:12 AM
To: Timberman,Toni L (BPA) - TSE-TPP-2
Subject: RE: PSANI update - need your review -

I just heard your voice mail and wnated to let you know. It is upto you to state it or not.

Berhanu Tesema
BPA Transmission Services
Transmission Planning -TPP/DITT2
bktesema@bpa.gov
360-619-6819

From: Timberman,Toni L (BPA) - TSE-TPP-2
Sent: Friday, October 04, 2013 9:09 AM
To: Tesema,Berhanu K (BPA) - TPP-OPP-3
Subject: RE: PSANI update - need your review -

I know – do you want me to state that in this report?

From: Tesema,Berhanu K (BPA) - TPP-OPP-3
Sent: Friday, October 04, 2013 9:09 AM
To: Timberman,Toni L (BPA) - TSE-TPP-2; Cathcart,David A (BPA) - TPP-OPP-3
Subject: RE: PSANI update - need your review -

Toni,
The BPA project manager for the PSANI projects is Mike Marleau.

Berhanu Tesema
BPA Transmission Services
Transmission Planning -TPP/DITT2
bktesema@bpa.gov
360-619-6819

From: Timberman,Toni L (BPA) - TSE-TPP-2
Sent: Friday, October 04, 2013 8:54 AM
To: Cathcart,David A (BPA) - TPP-OPP-3; Tesema,Berhanu K (BPA) - TPP-OPP-3
Subject: RE: PSANI update - need your review -

Thanks, Dave. See my comments and edits below.

From: Cathcart,David A (BPA) - TPP-OPP-3
Sent: Thursday, October 03, 2013 5:17 PM
To: Timberman,Toni L (BPA) - TSE-TPP-2; Tesema,Berhanu K (BPA) - TPP-OPP-3
Subject: RE: PSANI update - need your review -

I've made some edits. Who is the audience for this update? This is intended to be included in the report to the Administrator (all executives) that the AEs prepare every two weeks. I don't want to include too much detail, because I know the plans will likely be modified as they mature, but I wanted to give a sense of where all parties are with their projects and the expected energization so our financial folks can be prepared to pay upon completion of PSE and SCL projects.
1) Len's scope estimates for Bothell-Snoking are **PRELIM** at this point; Line Design may identify other structures that need reinforcement once the WO is issued and Full Design commences. Do we really want to say how many structures are involved at this stage of the scoping? I mentioned two structures for the Bothell-SnoKing work because those were certain at this time, but did not include the detail of the disconnects and possibly CT replacement. Per your suggestion, I deleted this part.
2) The reactor at Raver is a replacement **NOT** an expansion/addition. It was due to the fire and is **unrelated** to the Raver Transformer project. That's what I thought…will not mention that project in my report.
3) The NI RAS PRD is **NOT** for WECC/NERC compliance but for BPA Operations and Design Policies/Standards for RAS and Communications, in addition to aging equipment replacement. The CTG additions to the RAS Algorithm would then reduce NI curtailment exposures.

From: Timberman,Toni L (BPA) - TSE-TPP-2
Sent: Thursday, October 03, 2013 4:50 PM
To: Tesema,Berhanu K (BPA) - TPP-OPP-3; Cathcart,David A (BPA) - TPP-OPP-3
Subject: PSANI update - need your review -

Berhanu and Dave, please review and let me know your comments. I need to submit this on Friday, so before noon would be best.

Thanks,
Toni

_____

In January of 2012 BPA, Puget and Seattle executed a Memorandum of Agreement in which commitments were made to build certain transmission reinforcement projects in the Puget Sound area, for the purpose of relieving congestion and reducing the number and severity of transmission curtailments. The cost of the Seattle and Puget projects will be allocated roughly 1/3 to each of the Parties, with BPA additionally paying the full cost of the BPA projects. Efforts are now ramping up to proceed, and the Project Managers have been meeting to more clearly define and coordinate the scope, design and schedule.

Seattle is on track to complete the Bothell to SnoKing Reconductor Project, the Broad Street Inductor Project, the North Downtown Inductor Project and the Delridge to Duwamish Reconductor Project in 2016. BPA has a role in the Bothell to SnoKing project, needing to reconductor our ½-mile owned sections of both the Bothell-SnoKing #1 and #2 230 kV lines.~~, including modification of two structures and replacement of disconnect switches at SnoKing~~.

Puget Sound Energy is proceeding with the Sammamish to Lakeside to Talbot Rebuild Project, to be completed in 2017. They have delayed the Lakeside 230 kV Transformer Addition Project. This project is located in downtown Bellevue and is encountering a lot of public resistance.

BPA, in addition to the Bothell-SnoKing work, is proceeding with development of the plan of service for addition of a 500/230 kV transformer at Raver, including reconfiguration of the **Raver-Tacoma #1 & #2** transmission lines and additional reconfigurations at Covington Substation. This work is scheduled for **2016** completion. ~~*Uzma mentioned that a new reactor will be installed as part of this project, but that is just additional work to replace the one that burned, and not an addition to the PSANI projects, correct? Please verify.*~~

BPA is also scoping the Northern Intertie RAS Improvement Project, replacing the existing communication and relaying equipment and ensuring that it meets current BPA Design and Operations Standards for Communications, Relaying, and RAS ~~meets WECC and NERC compliance requirements~~. There has been some resistance from BC Hydro regarding expanding the scope of the RAS to include additional contingencies that were identified in the Columbia Grid Study, but discussions between our respective Planning staff will hopefully lead to the desired outcome. The new equipment being installed by BPA will include the flexibility to add the contingencies once agreement is reached with BC Hydro. The ~~Northern Intertie RAS Improvement Project~~ equipment upgrades are tentatively scheduled to be completed in **2016**

From: Tesema,Berhanu K (BPA) - TPP-OPP-3
To: Timberman,Toni L (BPA) - TSE-TPP-2
Subject: FW: PSANI projects
Date: Friday, October 04, 2013 9:41:59 AM

FYI

Berhanu Tesema
BPA Transmission Services
Transmission Planning -TPP/DITT2
bktesema@bpa.gov
360-619-6819

From: Marleau,Michael L (BPA) - TEP-TPP-1
Sent: Friday, October 04, 2013 9:40 AM
To: Tesema,Berhanu K (BPA) - TPP-OPP-3
Subject: Re: PSANI projects

Yes

From: Tesema,Berhanu K (BPA) - TPP-OPP-3
Sent: Friday, October 04, 2013 09:40 AM
To: Marleau,Michael L (BPA) - TEP-TPP-1
Subject: PSANI projects

Mike,
Are you the project manager for all the PSANI projects? Just to make sure.

Berhanu Tesema
BPA Transmission Services
Transmission Planning -TPP/DITT2
bktesema@bpa.gov
360-619-6819

From: Timberman,Toni L (BPA) - TSE-TPP-2
To: Millar,Susan B (BPA) - TO-DITT-2
Subject: RE: New PSA map?
Date: Monday, October 07, 2013 4:15:00 PM

Do you know the source of the map? I need a bigger copy for a discussion with Kim L.

From: Millar,Susan B (BPA) - TS-DITT-2
Sent: Monday, October 07, 2013 3:45 PM
To: Timberman,Toni L (BPA) - TSE-TPP-2
Subject: RE: New PSA map?

DSO 348, Attachment 4, Puget Sound Area Transmission Diagram

From: Timberman,Toni L (BPA) - TSE-TPP-2
Sent: Monday, October 07, 2013 3:43 PM
To: Millar,Susan B (BPA) - TS-DITT-2
Subject: New PSA map?

Hi Susan,
Seems to me you said there was an updated map of the Puget Sound area "PSANI" map. How can I get my hands on a copy?
Thanks,
Toni

From: Siddiqi, Uzma
To: Phillips, John M - Transmission; Timberman,Toni L (BPA) - TSE-TPP-2
Subject: RE: MOA for PSANI Projects
Date: Wednesday, October 09, 2013 5:04:31 PM

John and Toni,
I am in ICS training on Wednesday 10/23 for the whole day.
Nov 5th is pretty open.
Uzma

From: Phillips, John M - Transmission [john.phillips@pse.com]
Sent: Wednesday, October 09, 2013 11:21 AM
To: Timberman,Toni L (BPA) - TSE-TPP-2; Siddiqi, Uzma
Subject: RE: MOA for PSANI Projects

I apologize. After reviewing my schedule, my flight doesn't leave until 2:15 on the 23rd so I am free between 10:30 and 12:30 that day. I will be in LA on the 25th.

From: Timberman,Toni L (BPA) - TSE-TPP-2 [mailto:tltimberman@bpa.gov]
Sent: Wednesday, October 09, 2013 11:16 AM
To: Phillips, John M - Transmission; 'Uzma Siddiqi (uzma.siddiqi@seattle.gov)'
Subject: RE: MOA for PSANI Projects

I am out of the office next Wednesday. Are you in the office on the 25th? If that works, I could stay over another night.

From: Phillips, John M - Transmission [mailto:john.phillips@pse.com]
Sent: Wednesday, October 09, 2013 11:00 AM
To: Timberman,Toni L (BPA) - TSE-TPP-2; 'Uzma Siddiqi (uzma.siddiqi@seattle.gov)'
Subject: RE: MOA for PSANI Projects

Unfortunately I have the WECC PCC meeting on the 23rd and 24th and a ColumbiaGrid meeting on the 5th. I will be in Portland next Wednesday, 10/16, and available in the afternoon if that is a possibility. Otherwise we may need to have a conference call but face to face would be better.

From: Timberman,Toni L (BPA) - TSE-TPP-2 [mailto:tltimberman@bpa.gov]
Sent: Wednesday, October 09, 2013 10:29 AM
To: Phillips, John M - Transmission; 'Uzma Siddiqi (uzma.siddiqi@seattle.gov)'
Subject: MOA for PSANI Projects

Hi John and Uzma,

Now that we are ramping up efforts associated with the PSANI Projects it seems like a good time to review the MOA to determine what, if any, changes need to be made, and to discuss the process in general.

I will be up there for meetings on October 23 and 24, with free time between 11-noon on the 23rd, or after 3:00 that day, and any time on the morning of the 24th.

Let me know if you would like to get together during any of these times.

I believe I will be in Tacoma for a meeting from 1-2 on November 5, so if nothing earlier works perhaps we can meet on that day.

Toni

From: Timberman,Toni L (BPA) - TSE-TPP-2
To: Dexter,Lisa L (CONTR) - NSL-WHSE
Subject: RE: for bi-weekly
Date: Wednesday, October 09, 2013 8:29:00 AM

Puget Sound Area Reinforcement Projects. This is one topic with multiple paragraphs.

From: Dexter,Lisa L (CONTR) - TSE-TPP-2
Sent: Wednesday, October 09, 2013 7:57 AM
To: Timberman,Toni L (BPA) - TSE-TPP-2
Subject: RE: for bi-weekly

Thank you!

I have a question about how to title this in the report. It looks like the first 3 paragraphs are for Puget/Seattle. I'm not sure what to title the 4th and 5th paragraphs. Are they for a particular customer or should I title them the project? Like for the 4th paragraph – 500/230 kV Transformer at Raver and the 5th paragraph – Northern Intertie RAS Improvement Project? Please let me know. Thanks!

Lisa Dexter
Administrative Assistant
CRGT
TSE-TPP-2
360-619-6632
Bonneville Power Administration

From: Timberman,Toni L (BPA) - TSE-TPP-2
Sent: Friday, October 04, 2013 2:46 PM
To: Dexter,Lisa L (CONTR) - TSE-TPP-2
Subject: for bi-weekly

In January of 2012 BPA, Puget and Seattle executed a Memorandum of Agreement in which commitments were made to build certain transmission reinforcement projects in the Puget Sound area, for the purpose of relieving congestion and reducing the number and severity of transmission curtailments. These projects are commonly referred to as the "PSANI Projects". The cost of the Seattle and Puget projects will be allocated roughly 1/3 to each of the Parties, with BPA additionally paying the full cost of the BPA projects. Efforts are now ramping up and the Project Managers from each utility have been meeting to more clearly define and coordinate the scope, design and schedule.

Seattle is on track to complete the Bothell to SnoKing Reconductor Project, the Broad Street Inductor Project, the North Downtown Inductor Project and the Delridge to Duwamish Reconductor Project in 2016. BPA has a role in the Bothell to SnoKing project, needing to reconductor our ½-mile owned sections of both Bothell-SnoKing #1 and #2 230 kV lines.

Puget Sound Energy is delaying expected energization of their "Eastside 230" project from 2017 to 2018 due to complex siting issues. The "Eastside 230" consists of the Sammamish to Lakeside to

Talbot Rebuild Project, and the Lakeside 230 kV Transformer Addition Project.

BPA, in addition to the Bothell-SnoKing work, is proceeding with development of the plan of service for addition of a 500/230 kV transformer at Raver, including reconfiguration of the Raver-Tacoma #1 & #2 transmission lines and additional reconfigurations at Covington Substation. This work is scheduled for 2016 completion.

BPA is also scoping the Northern Intertie RAS Improvement Project, replacing the existing communication and relaying equipment and ensuring that it meets current BPA Design and Operations Standards for Communications, Relaying, and RAS. There has been some resistance from BC Hydro regarding expanding the scope of the RAS to include additional contingencies that were identified in the Columbia Grid Study, but discussions between our respective Planning staff will hopefully lead to the desired outcome. The new equipment being installed by BPA will include the flexibility to add the contingencies once agreement is reached with BC Hydro. The equipment upgrades are tentatively scheduled to be completed in 2016.

From:	Siddiqi, Uzma
To:	Timberman,Toni L (BPA) - TSE-TPP-2
Cc:	Tesema,Berhanu K (BPA) - TPP-OPP-3
Subject:	FW: Bothell-Snoking 230-kV upgrade
Date:	Thursday, October 10, 2013 11:25:01 AM
Attachments:	2013 Feb 27 Email Lu -- RE _ DRAFT Notes -- PSANI Projects -- Puget Sound Area Transmission Projects MOA -- BPA_SCL_PSE Joint Meeting.pdf

---

Toni,
The documents you requested are attached.
Uzma

From: Siddiqi, Uzma
Sent: Thursday, September 19, 2013 8:20 AM
To: 'Wilson,Jenny (BPA) - TPP-OPP-3'
Cc: Tesema,Berhanu K (BPA) - TPP-OPP-3; Ambrose, Philip
Subject: RE: Bothell-Snoking 230-kV upgrade

Welcome Jenny--good to have you on board!

I am attaching an email from earlier this year that lists

- the "desired" ratings for the upgraded Bothell-SnoKing #1 and #2 lines
- the BPA equipment at SnoKing that could become the limiting elements in the Bothell-SnoKing #1 and #2 ratings

SCL is working towards completion by the end of 2016 for the Bothell-SnoKing #1 and #2 reconductor project.

Hope this provides the details you need.
Uzma

From: Wilson,Jenny (BPA) - TPP-OPP-3 [mailto:jlwilson@bpa.gov]
Sent: Tuesday, September 17, 2013 11:40 AM
To: Siddiqi, Uzma
Cc: Tesema,Berhanu K (BPA) - TPP-OPP-3
Subject: FW: Bothell-Snoking 230-kV upgrade

Hi Uzma,

I am working with Berhanu on the Bothell-Snoking 230-kV upgrade project.

We are still in need of knowing what your timeline is to complete the project and what the conductor and capacity of the line will be.

Thank you.

Jenny Wilson
Bonneville Power Administration
Transmission Planning

From: Lu, Stephanie
To: Tesema,Berhanu K (BPA) - TPP-OPP-3; Siddiqi, Uzma; "Phillips, John M - Transmission"; "Seabrook, Joseph W -Joe - Transmission"; Duncan, Margaret; Ambrose, Philip; Marleau,Michael L (BPA) - TEP-TPP-1; "Kostek, Leann"
Subject: RE: DRAFT Notes -- PSANI Projects -- Puget Sound Area Transmission Projects MOA -- BPA/SCL/PSE Joint Meeting
Date: Wednesday, February 27, 2013 3:58:26 PM

The ratings from the ColumbiaGrid study based on the cases used for the Updated Report in 2011 (confirmed with Jonathan Young) are as follows:

Transmission Project	Winter Rating (MVA / Amps)
SK-BO #1	736 / 1848
SK-BO #2	736 / 1848
DE-DU	610 / 1531
MV-SK #1	771 / 1934
MV-SK #2	771 / 1934

Please let me know if you have any questions.

Thanks,
Stephanie

From: Tesema,Berhanu K (BPA) - TPP-OPP-3 [mailto:bktesema@bpa.gov]
Sent: Wednesday, February 27, 2013 7:06 AM
To: Siddiqi, Uzma; 'Phillips, John M - Transmission'; 'Seabrook, Joseph W -Joe - Transmission'; Duncan, Margaret; Ambrose, Philip; Lu, Stephanie; Marleau,Michael L (BPA) - TEP-TPP-1; 'Kostek, Leann'
Subject: RE: DRAFT Notes -- PSANI Projects -- Puget Sound Area Transmission Projects MOA -- BPA/SCL/PSE Joint Meeting

Below are terminal equipment ratings for Mapple Valley-Snoking 230-kV lines and Bothell-Snoking 230-kV lines.

At Maple Valley:

- Mapple Valley-Snoking 230-kV #1: Circuit breaker is rated 4000A, 80KA, and all three disconnect ratings are 2000A.
- Mapple Valley-Snoking 230-kV #2: Circuit breaker is rated 3000A, 63KA, and all three disconnect ratings are 2000A

At Snoking:

- Bothell-Snoking 230-kV #1: Circuit breaker is rated 3000A, 63KA, and all three disconnect ratings are 1600A.
- Bothell-Snoking 230-kV #2: Circuit breaker is rated 2000A, 40KA, and main bus disconnect is rated at 3000A and the other two disconnects are rated 1600A.

Let me know if you have any questions.

Thanks,

Berhanu Tesema
BPA Transmission Services
Transmission Planning -TPP/DITT2
bktesema@bpa.gov
360-619-6819

From: Siddiqi, Uzma [mailto:Uzma.Siddiqi@seattle.gov]
Sent: Tuesday, February 26, 2013 12:44 PM
To: Siddiqi, Uzma; 'Phillips, John M - Transmission'; Tesema,Berhanu K (BPA) - TPP-OPP-3; Seabrook, Joseph W -Joe - Transmission; Duncan, Margaret; Ambrose, Philip; Lu, Stephanie; Marleau,Michael L (BPA) - TEP-TPP-1; 'Kostek, Leann'
Subject: DRAFT Notes -- PSANI Projects -- Puget Sound Area Transmission Projects MOA -- BPA/SCL/PSE Joint Meeting

Please provide any corrections by 2/27/13
Please review the Action Items

DRAFT

PSANI Projects – Puget Sound Area Transmission Projects MOA BPA/SCL/PSE Joint Meeting

When: Tuesday, February 26, 2013 10:30 AM-1:30 PM

Attendees:
SCL: Siddiqi, Uzma
Duncan, Margaret
Ambrose, Philip
Lu, Stephanie

PSE: Phillips, John M
Seabrook, Joseph
Kostek, Leann

BPA: Tesema,Berhanu
Marleau,Michael

Action Item

1. Confirm who will Implement the MOA at BPA – Mike – 2/27/13
2. Provide the contact (phone/email/address) info for each of the "key players" – Phil/LeAnn/Mike – 2/27/13
3. How is the MV-SK costs impacted with consideration of terminal end equipment costs – this team -- after SCL and BPA (?) updates the reconductor estimates
4. BPA provides limiting element ratings for terminal equipment upgrades (BO-SK #1, BO-SK #2, MV-SK#1, and MV-SK#2) – Berhanu – 2/27/13
5. SCL provides the desired ratings for DE-DU, BO-SK #1 and BO-SK #2 (MV-SK #1 and MV-SK #2) based on the ColumbiaGrid study – Stephanie – 2/27/13
6. Status of NEPA review from BPA to SCL and PSE- Mike/Brad/Margee – 4/15/13

7. Check with lawyers about how to make/document "official" changes when there are no real disagreements about scope/schedule/cost – Phillips/Siddiqi/Marleau – 4/15/13
8. Coordinate BPA environmental process – Mike/Brad/Margee – 4/15/13
9. SCL will provide PSE (Leann) /BPA(Mike) proposed project cost accounts for review – Phil Ambrose – 4/15/13

Agenda

- Introductions
- Identification of key players at each utility. Executive Sponsor, Program Manager, Project Managers, Environmental folks, etc.

SCL:
Signatoree MOA: Jorge Carrasco, Executive Sponsor: Tuan Tran , Implement MOA/Program Manager: Uzma Siddiqi, Project Manager: Phil Ambrose, Environmental: Margee Duncan (reconductor) and Kathy Fendt (inductors), Planning: Stephanie Lu

PSE:
Signatoree MOA: Sue McLain, Executive Sponsor: Booga Gilbertson, Implement MOA/Contracts Manager: John Phillips, Project Manager: Leann Kostek, Environmental: Brad Strauch, Planning: Joe Seabrook and Carol Jeager

BPA:
Signatoree MOA: Hardev Juj, Executive Sponsor: Hardev Juj, Implement MOA: Jim Hallar, Project Manager: Mike Marleau, Environmental: Phil Smith, Planning: Berhanu Tesema

- Project Updates

SCL:
Began project planning in Jan 2013—define the work, update cost estimates, SEPA checklist for reconductor projects, street vacation project at Broad, SEPA at Denny for substation and inductors (EIS), budget in 2013/14 is limited, start necessary processes – environmental and street vacation. Budget is approved—2015/16 budget is for construction and procurement. Series inductors are included in the Denny Substation project. Energization is still per the schedule listed in the MOA. Terminal end equipment upgrades at Bothell, Delridge, and Duwamish substations may be needed and may impact costs of the projects.

PSE:
PSE has validated load service need. Reviewing alternatives for transmission and transformation. Project is a overlay of load service with the added benefit of alleviating PSANI curtailments.

BPA:
Done preliminary design and cope of work. Design and construction will be CMO (Constuction Management Office). Four projects: Raver, Covington, Line reterminations, RAS (in-house). Detailed design for all but RAS in mid March 2013. Updating estimates in the near future. RAS: working with BCHydro – other pieces that also need to be updated. Met in Sept 2012 with BCHydro for the RAS—consider other options, including ramp instead of separation. RAS: Date is uncertain, target of 2016. Raver: engineering 2013/14, construction in 2015/16 or later. Real property review process started. Environmental review process started.

- How will we document changes (scope/schedule/cost) to MOA – eg Covington to Raver change, terminal end equipment costs, RAS date change, project scope change.

Options:

- Letter of Agreement between the three parties.
- Change Log from MOA with each utility's approvals
- Amend agreement

- NEPA/SEPA Coordination (Since BPA is paying some of the costs, we'd like to make sure that the projects meet any NEPA obligations) – Action item added

- Cost documentation (granularity required to have a smooth reimbursement process in 5 years) – Action item added

- Next Steps for the MOA implementation between BPA/SCL/PSE

Next Meeting mid-September at PSE (Leann to coordinate)

-----Original Appointment-----
From: Siddiqi, Uzma
Sent: Tuesday, February 05, 2013 3:54 PM
To: Siddiqi, Uzma; 'Phillips, John M - Transmission'; 'Tesema,Berhanu K (BPA) - TPP-OPP-3'; Seabrook, Joseph W -Joe - Transmission; SCL_VisitorCenter; Duncan, Margaret; Fendt, Kathy; Ambrose, Philip
Cc: Hammack, Laurie; Tran, Tuan; Lu, Stephanie; 'Marleau,Michael L (BPA) - TEP-TPP-1'; RoqueBamba@pse.com; roque.bamba@pse.com; 'Kostek, Leann'; 'Weiss,John R (BPA) - TPCV-COVINGTON'
Subject: Puget Sound Area Transmission Projects -- BPA/SCL/PSE Joint Meeting
When: Tuesday, February 26, 2013 10:30 AM-1:30 PM (GMT-08:00) Pacific Time (US & Canada).
Where: SCL_SMT_ConfRm3303-18

Puget Sound Area Transmission Projects -- BPA/SCL/PSE Joint Meeting

Memorandum of Agreement -- Jointly BPA, SCL, PSE
Dated Jan 31, 2012 (attached)

<< File: MOA BPA PSE SCL.pdf >>

Preparation:

1. Please forward this meeting invitation to appropriate persons within your organization.

- SCL "To" attendees: Program Manager, Project Manager, Environmental Leads
- SCL "cc" invitees: Director of Engineering, Planning Manager

2. I've booked at room at Seattle City Light, but we could also meet at PSE.

- To SCL from airport and driving -- directions attached

<< File: SCL Directions.doc >>

- Check in on 32nd Floor. Meeting on 33rd Floor in Conference Room 3303.

3. A list of items of interest for the Agenda:

- SCL interest: Identification of key players at each utility. Executive Sponsor, Program Manager, Project Managers, Environmental folks, etc.
- SCL interest: NEPA/SEPA Coordination (Since BPA is paying some of the costs, we'd like to make sure that the projects meet any NEPA obligations)
- SCL interest: Cost documentation (granularity required to have a smooth reimbursement process in 5 years)
- SCL interest: Next Steps for the MOA implementation between BPA/SCL/PSE

- Any other BPA topics of interest?
- Any other PSE topics of interest?

Phone: (360) 619-6816
Email: jlwilson@bpa.gov

From: Tesema,Berhanu K (BPA) - TPP-OPP-3
Sent: Tuesday, January 08, 2013 1:14 PM
To: Wilson,Jenny (BPA) - TPP-OPP-3
Subject: FW: Bothell-Snoking 230-kV upgrade

FYI

Berhanu Tesema
BPA Transmission Services
Transmission Planning -TPP/DITT2
bktesema@bpa.gov
360-619-6819

From: Siddiqi, Uzma [mailto:Uzma.Siddiqi@seattle.gov]
Sent: Friday, December 28, 2012 12:55 PM
To: Tesema,Berhanu K (BPA) - TPP-OPP-3
Cc: Ambrose, Philip
Subject: RE: Bothell-Snoking 230-kV upgrade

Berhanu,
Thanks for the info. I'll get back in touch sometime in the next month or so with more information. We probably need to develop a work plan for the BO-SK 1&2 reconductors and then you'll have something to comment on.

Uzma
p.s. Happy New Year!

From: Tesema,Berhanu K (BPA) - TPP-OPP-3 [mailto:bktesema@bpa.gov]
Sent: Friday, December 28, 2012 12:02 PM
To: Siddiqi, Uzma
Subject: RE: Bothell-Snoking 230-kV upgrade

Thank you Uzma for a quick response. The terminal equipment ratings at Snoking for the two lines are as follows.

Bothell-Snoking #1:

- Circuit breaker is rated at 3000-A, 63-kA
- the three disconnect swithes are rated at 1600-A each

Bothell-Snoking #2:

- Circuit breaker is rated at 2000-A, 40-kA

- The main bus disconnect switch is rated at 3000-A
- The two line disconnects are rated at 1600-A each

Let me know when you want to get together to discuss coordination of this project.

Thanks

Berhanu Tesema
BPA Transmission Services
Transmission Planning -TPP/DITT2
bktesema@bpa.gov
360-619-6819

From: Siddiqi, Uzma [mailto:Uzma.Siddiqi@seattle.gov]
Sent: Friday, December 28, 2012 11:36 AM
To: Tesema,Berhanu K (BPA) - TPP-OPP-3
Subject: RE: Bothell-Snoking 230-kV upgrade

Berhanu,
This work is related to the PSAST recommendations in the 2011 report and then agreed to by SCL/BPA/PSE officers and directors in an MOA. So that you have all the details, I am attaching both of these documents. Yes, let's meet to discuss any work that my result.
Thanks,
Uzma

From: Tesema,Berhanu K (BPA) - TPP-OPP-3 [mailto:bktesema@bpa.gov]
Sent: Friday, December 28, 2012 11:29 AM
To: Siddiqi, Uzma
Subject: Bothell-Snoking 230-kV upgrade

Hi Uzma,
At the last PSAST meeting, you mentioned that SCL is rebuilding the Bothell-Snoking 230-kV lines with high capacity conductor and need to coordinate with BPA for the last 1/2 mile section into Snoking. Could you please let me know the time line you are working with (energization date, .. etc) and the conductor and capacity of the new line. I would be open to have a meeting to discuss this project soon.

Let me know your thoughts.

Thanks,

Berhanu Tesema
BPA Transmission Services
Transmission Planning -TPP/DITT2
bktesema@bpa.gov
360-619-6819

From:	Marleau,Michael L (BPA) - TEP-TPP-1
To:	"Siddiqi, Uzma"; Ambrose, Philip
Cc:	Timberman,Toni L (BPA) - TSE-TPP-2; Angela.Dorf@hdrinc.com; Tesema,Berhanu K (BPA) - TPP-OPP-3; Wilson,Jenny (BPA) - TPP-OPP-3; Cathcart,David A (BPA) - TPP-OPP-3; Jusupovic,Jana D (BPA) - TPC-TPP-4
Subject:	BPA"s Project Requirements Diagrams (PRDs) for PSANI
Date:	Thursday, October 10, 2013 11:23:14 AM
Attachments:	PRD-311814_Sno King Substation.pdf 300515-01.pdf

---

Uzma and Philip, attached is the cover sheet for the final PRD for Raver and Covington Substations (300515-01.pdf) and the preliminary PRD for Sno King Substation.

These are our planning documents to provide a project overview.

Since the Sno King PRD is preliminary, I wanted to verify if the Sno King –Maple Valley 230kV Line needed to be reconductored (therefore requiring the Sno King disconnects to be upgraded on the that line position).

Thanks,

Mike

Michael L. Marleau

Senior Project Manager - TEP

Office Phone: (360) 619-6053

email: mlmarleau@bpa.gov

DISTRICT: SNOHOMISH

MINIMUM HISTORICAL TEMPERATURE: -24.4 C (-28.9 F)
SEISMIC ZONE 3 = ZPA G-LEVEL: 0.40

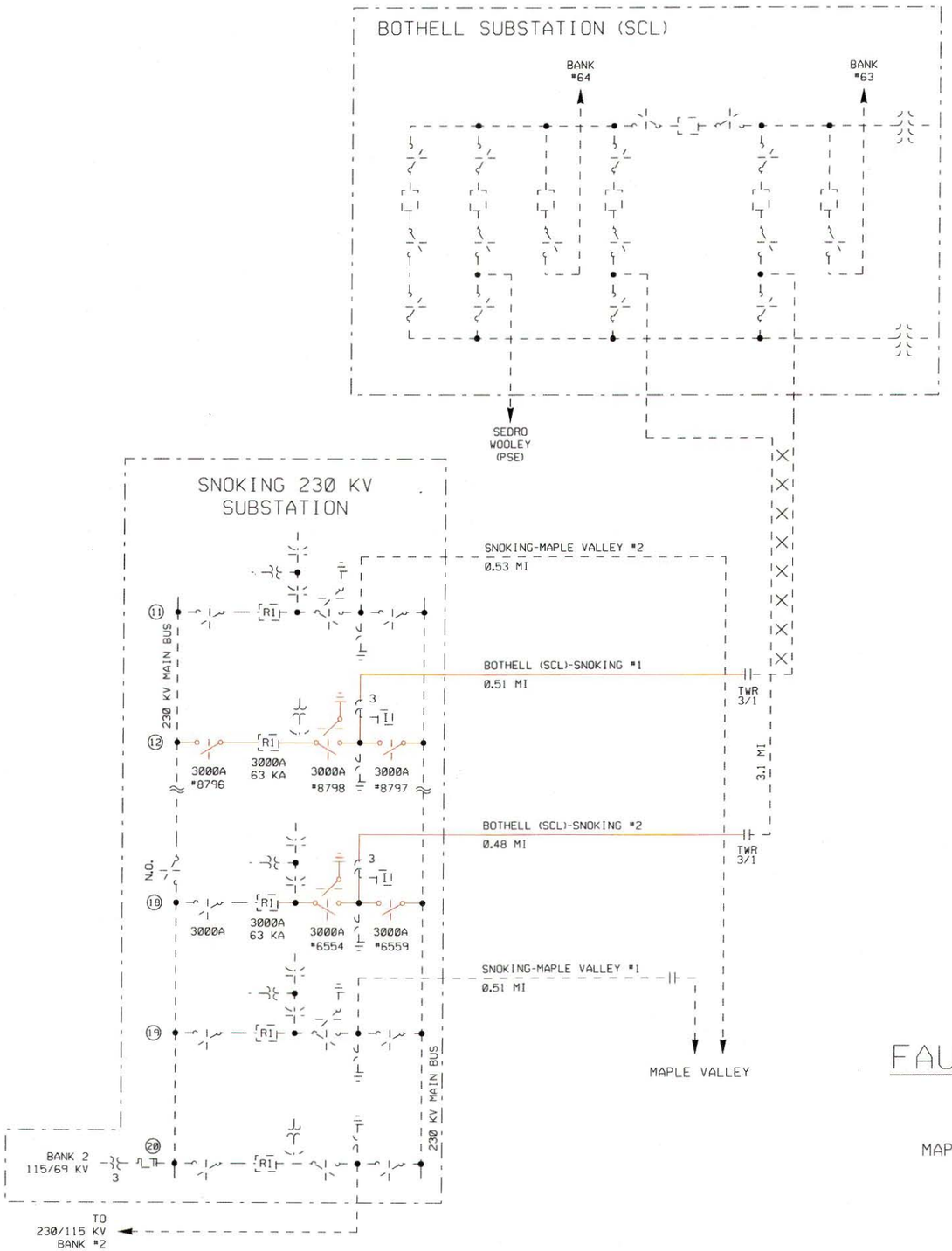

NOTES:

1. THIS PROJECT WILL IMPROVE SYSTEM RELIABILITY IN THE PUGET SOUND AREA AND WILL HELP TO SUPPORT WINTER SOUTH TO NORTH TRANSFERS.
2. RECONDUCTOR 0.51 MILE OF THE BOTHELL -SNOKING #1 LINE FROM THE SNOKING 230 KV BUS IN BAY 12 TO TOWER 3/1 TO ACHIEVE A RATING OF 1900A AT -5C AMBIENT FOR 100C MOT.. REPLACE THE EXISTING 1600 A DISCONNECTS (#8796, #8798 AND #8797) WITH 3000 A DISCONNECTS.
3. RECONDUCTOR 0.48 MILE OF THE BOTHELL - SNOKING #2 LINE FROM THE SNOKING 230 KV BUS IN BAY 18 TO TOWER 3/1 (CHANGE OF OWNERSHIP WITH SEATTLE CITY LIGHT) TO ACHIEVE A RATING OF 1900A AT -5C AMBIENT FOR 100C MOT. REPLACE THE EXISTING 1600 A DISCONNECTS #6554 AND #6559 WITH 3000A DISCONNECTS.
4. OUTAGE COORDINATION WITH SEATTLE CITY LIGHT (SCL) WILL BE REQUIRED DURING CONSTRUCTION OF THIS PROJECT.
5. COORDINATING ENGINEER:
   JENNY WILSON-TPP/OPP-3
   PHONE: (360) 619-6816
6. PLANNING ENGINEER:
   DAVE CATHCART TPP/OPP-3
   PHONE: (360) 619-6854
7. CAD TECHNICIAN:
   ALEX VASILIU-TPM/OPP-3
   PHONE: (360) 619-6773

LEGEND

- NEW THIS PROJECT
- EXISTING OR OTHER PROJECT
- BOUNDARY LINE
- CHANGE OF OWNERSHIP

DRAFT PRELIMINARY
SEP-30-2013

FAULT DUTY AMPS (2011)

		1LG	3LG
MAPLE VALLEY	230 KV	37,033	38,078
SNOKING	115 KV	33,697	37,011
SNOKING	230 KV	29,161	36,309
SNOKING	525 KV	13,298	17,242
BOTHELL	115 KV	43,230	39,267
BOTHELL	230 KV	32,767	37,066

NO.	COMPUTER REVISION ONLY	PLANNING ENGINEER	APPROVED

PROJECT REQUIREMENTS DIAGRAM

UNITED STATES DEPARTMENT OF ENERGY
BONNEVILLE POWER ADMINISTRATION
HEADQUARTERS, PORTLAND, OREGON

PROPOSED ENERGIZATION DATE(S): MMM-DD-20XX

OPERATIONS & PLANNING

PRELIMINARY APPROVED DATE

PLANNING ENGINEER: JENNY WILSON

BOTHELL–SNOKING #1 AND #2
230 KV LINE
RECONDUCTOR PROJECT

FINAL APPROVED DATE

SERIAL	SOURCE	SIZE	SHEET	REVISION
311814	TP	A3	1 OF 1	0

DISTRICT: COVINGTON

MINIMUM HISTORICAL TEMPERATURE: -22°C (-8°F)
SEISMIC ZONE ZPA G-LEVEL: 3=0.30
NERC CRITICAL INFRASTRUCTURE PROTECTION (CIP)
DESIGNATE SITE YES ☒ NO ☐

LEGEND

- NEW THIS PROJECT
- EXISTING OR OTHER PROJECT
- TO BE REMOVED
- FUTURE EQUIPMENT
- BOUNDARY LINE
- CHANGE OF OWNERSHIP

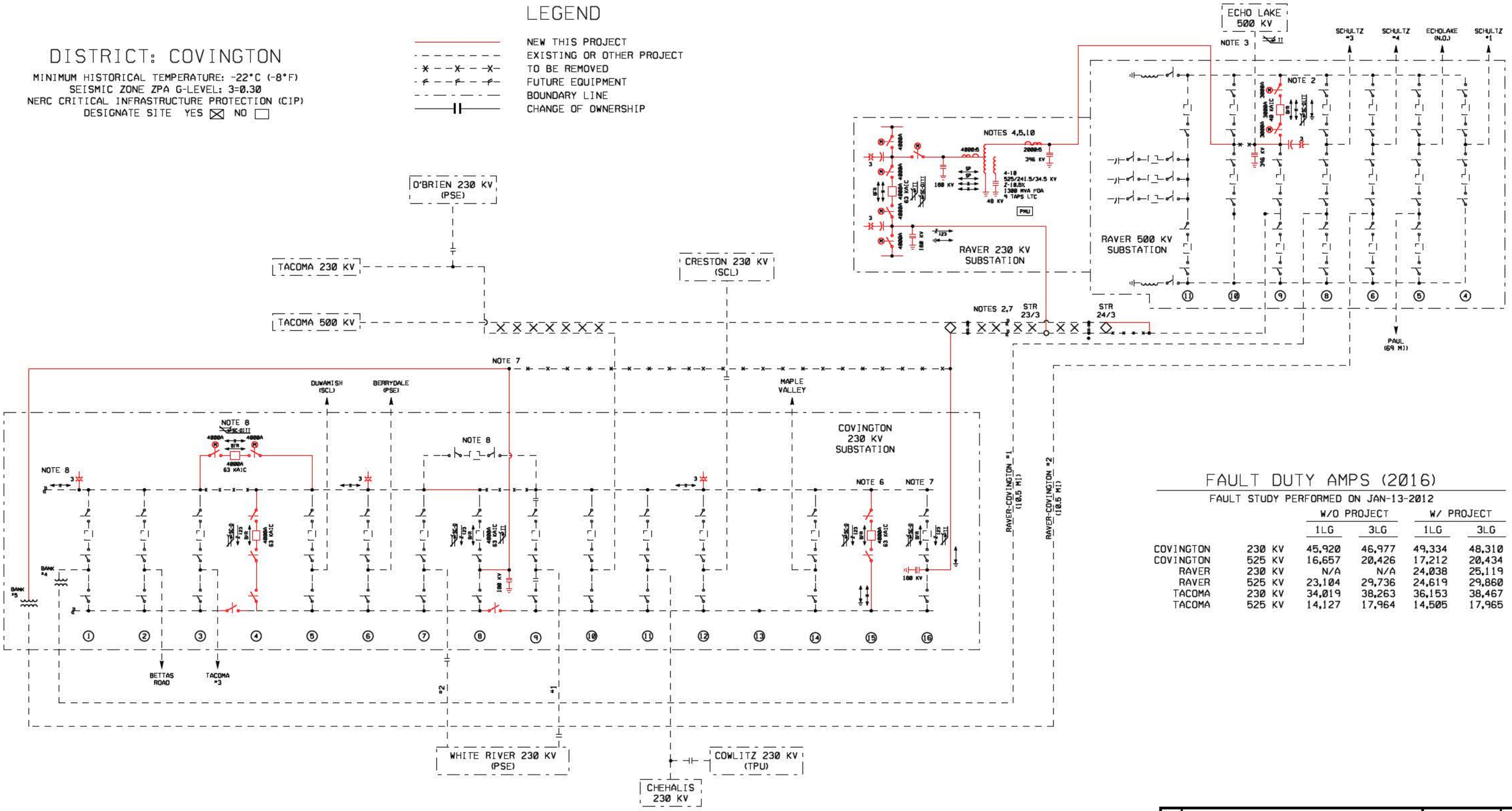

FAULT DUTY AMPS (2016)

FAULT STUDY PERFORMED ON JAN-13-2012

		W/O PROJECT		W/ PROJECT	
		1LG	3LG	1LG	3LG
COVINGTON	230 KV	45,920	46,977	49,334	48,310
COVINGTON	525 KV	16,657	20,426	17,212	20,434
RAVER	230 KV	N/A	N/A	24,038	25,119
RAVER	525 KV	23,104	29,736	24,619	29,860
TACOMA	230 KV	34,019	38,263	36,153	38,467
TACOMA	525 KV	14,127	17,964	14,505	17,965

FINAL
MAR-05-2012

NO.	COMPUTER REVISION ONLY	PLANNING ENGINEER	APPROVED

PROJECT REQUIREMENTS DIAGRAM

UNITED STATES DEPARTMENT OF ENERGY
BONNEVILLE POWER ADMINISTRATION
HEADQUARTERS, PORTLAND, OREGON

PROPOSED ENERGIZATION DATE(S): SEPT-01-2016

OPERATIONS & PLANNING

PRELIMINARY APPROVED DATE: B. TESEMA DEC-29-11

COORDINATING ENGINEER: DAVID CATHCART

FINAL APPROVED DATE

RAVER 500/230 KV TRANSFORMER ADDITION

SERIAL	SOURCE	SIZE	SHEET	REVISION
300515	TP	A3	1 OF 4	0

From: Timberman,Toni L (BPA) - TSE-TPP-2
To: Tesema,Berhanu K (BPA) - TPP-OPP-3
Subject: RE: BPA"s Project Requirements Diagrams (PRDs) for PSANI BOTHELL-SNOKING
Date: Friday, October 11, 2013 8:41:00 AM

Thanks, Berhanu. I am not sure how an estimate of 2.5 million was put in the MOU when that was only the cost of the materials, with no labor included. Seems like there should be a couple more million in there. I will invite you to the meeting with John and Uzma.
Toni

From: Tesema,Berhanu K (BPA) - TPP-OPP-3
Sent: Friday, October 11, 2013 8:18 AM
To: Timberman,Toni L (BPA) - TSE-TPP-2; Cathcart,David A (BPA) - TPP-OPP-3; Rodrigues,Melvin T (BPA) - TPP-OPP-3
Cc: Wilson,Jenny (BPA) - TPP-OPP-3; Custer,Leonard L (BPA) - TELC-TPP-3; Ashburn,Tyler (BPA) - TELC-TPP-3; Marleau,Michael L (BPA) - TEP-TPP-1; angela.dorf@hdrinc.com; Jusupovic,Jana D (BPA) - TPC-TPP-4
Subject: RE: BPA's Project Requirements Diagrams (PRDs) for PSANI BOTHELL-SNOKING

The Quanta estimate is attached for your reference (starting on page 14). The Quanta estimate for the ACSR 795 Drak conductor and the high temp conductor is very close, $2.4million vs $2.69million. I agree with Dave that the estimate for the high temp is on a low side and the rating of 1850A is probably adequate for now. However, the system is never normal and we should target the maximum rating possible when the opportunity arises to reconductor or rebuild, of course with consideration for cost.

On another note, the Snoking tap to Monroe-Echo Lake 500-kV line does not have a disconnect switch.

Thanks,

Berhanu Tesema
BPA Transmission Services
Transmission Planning -TPP/DITT2
bktesema@bpa.gov
360-619-6819

From: Timberman,Toni L (BPA) - TSE-TPP-2
Sent: Friday, October 11, 2013 7:08 AM
To: Cathcart,David A (BPA) - TPP-OPP-3; Tesema,Berhanu K (BPA) - TPP-OPP-3; Rodrigues,Melvin T (BPA) - TPP-OPP-3
Cc: Wilson,Jenny (BPA) - TPP-OPP-3; Custer,Leonard L (BPA) - TELC-TPP-3; Ashburn,Tyler (BPA) - TELC-TPP-3; Marleau,Michael L (BPA) - TEP-TPP-1; angela.dorf@hdrinc.com; Jusupovic,Jana D (BPA) - TPC-TPP-4
Subject: RE: BPA's Project Requirements Diagrams (PRDs) for PSANI BOTHELL-SNOKING

I am scheduling a meeting with both SCL and Puget within the next couple of weeks to discuss the MOU and will put this on the agenda. Because John Phillips from Puget will be there, he should be able to address the conductor cost and alternatives with Uzma – we would likely follow up with another technical meeting. I really appreciate your concern and insight about the potential cost of

the project.
Toni

From: Cathcart,David A (BPA) - TPP-OPP-3
Sent: Thursday, October 10, 2013 5:41 PM
To: Tesema,Berhanu K (BPA) - TPP-OPP-3; Rodrigues,Melvin T (BPA) - TPP-OPP-3
Cc: Wilson,Jenny (BPA) - TPP-OPP-3; Custer,Leonard L (BPA) - TELC-TPP-3; Ashburn,Tyler (BPA) - TELC-TPP-3; Marleau,Michael L (BPA) - TEP-TPP-1; Timberman,Toni L (BPA) - TSE-TPP-2; angela.dorf@hdrinc.com; Jusupovic,Jana D (BPA) - TPC-TPP-4
Subject: RE: BPA's Project Requirements Diagrams (PRDs) for PSANI BOTHELL-SNOKING

The stated ampacity requirement of 1850A (winter) is for TCRM values related to N-1-X conditions. "Gold-plate" ampacities from the report call for 2500A-3000A ratings, while minimum ampacity to meet Deterministic NERC TPL performance levels is about1500A. BPA's current winter rating on these lines is 1550A; **SCL recently adopted an emergency rating for these lines, which is 1484A @ 0degC (up from 1288A used in the 2011 CG Studies)**. CG assumed an 1850A rating to acheive a "middle ground" of TCRM improvements.

I'm a little concerned after today's meeting that SCL is underestimating the true cost of implementing High Temp conductor for BOT-SNK. The overreliance on the exact Project Scope in the MOA is also troubling; it was written with very high level scope and costs in mind. The CG study team assumed HighTemp wire was relatively simple to implement, but the total Quantas estimate of $3M is starting to sound like an extreme low-ball. (My BOE esimtate is that BPA's total cost for our 0.5miles inc terminal equip upgrades is roughly $750K). Including the uncertainty and implementation costs for the HighTemp wire, it seems like the SCL design costs are destined to balloon.

If the BPA towers are remotely similar to the SCL towers on the line, and BPA is able to string a slightly larger conventional AAC/ACSR conductor with minimal (2) tower reinforcements, why doesn't SCL consider a more conventional upgrade approach? At the very least, SCL should be in contact with PSE about the type of High Temp wire they use and PSE's anecdotal experiences (maintenance, reliability, cost, etc). We should communicate this to them in some fashion.

I personally question the need to have much more than the prescribed 1850A in the long term; anything higher is to satisfy TCRM outage conditions that are gold plating the system. And if that ampacity can be met with minimal tower upgrades and traditional conductors, we need to convince SCL to at least examine it. SCL seems to be blindly following the MOA and its implication of reconductoring with "high-temp" wire.

BPA has a financial interest in their chosen design since we'll be paying for at least 1/3 of it.

my 2cents
--Dave

From: Siddiqi, Uzma [mailto:Uzma.Siddiqi@seattle.gov]
Sent: Thursday, October 10, 2013 11:29 AM
To: Marleau,Michael L (BPA) - TEP-TPP-1
Cc: Timberman,Toni L (BPA) - TSE-TPP-2; Angela.Dorf@hdrinc.com; Tesema,Berhanu K (BPA) - TPP-OPP-3; Wilson,Jenny (BPA) - TPP-OPP-3; Cathcart,David A (BPA) - TPP-OPP-3; Jusupovic,Jana D (BPA) - TPC-TPP-4; Ambrose, Philip; Risch, Bob
Subject: RE: BPA's Project Requirements Diagrams (PRDs) for PSANI

Mike,
Thank you for the PRDs.

You asked about the SK_MV lines--
The 2011 ColumbiaGrid plan and the subsequent BPA-PSE-SCL Agreement DO NOT reconductor either of the 230kV SnoKing-MapleValley lines.

(In the agreement there is a partial payment to PSE to compensate them for the work that they are doing based on what the reconductor in the 2010 ColumbiaGrid plan would have cost.)

Uzma

From: Marleau,Michael L (BPA) - TEP-TPP-1 [mailto:mlmarleau@bpa.gov]
Sent: Thursday, October 10, 2013 11:23 AM
To: Siddiqi, Uzma; Ambrose, Philip
Cc: Timberman,Toni L (BPA) - TSE-TPP-2; Angela.Dorf@hdrinc.com; Tesema,Berhanu K (BPA) - TPP-OPP-3; Wilson,Jenny (BPA) - TPP-OPP-3; Cathcart,David A (BPA) - TPP-OPP-3; Jusupovic,Jana D (BPA) - TPC-TPP-4
Subject: BPA's Project Requirements Diagrams (PRDs) for PSANI

Uzma and Philip, attached is the cover sheet for the final PRD for Raver and Covington Substations (300515-01.pdf) and the preliminary PRD for Sno King Substation.

These are our planning documents to provide a project overview.

Since the Sno King PRD is preliminary, I wanted to verify if the Sno King –Maple Valley 230kV Line needed to be reconductored (therefore requiring the Sno King disconnects to be upgraded on the that line position).

Thanks,
Mike

Michael L. Marleau
Senior Project Manager - TEP
Office Phone: (360) 619-6053
email: mlmarleau@bpa.gov

QUANTA TECHNOLOGY

the power of 1

PSANI Project Cost Estimates

Columbia Grid Executive Committee

July 29, 2011

Revision 2

About Quanta Technology

- Independent Consulting Arm of Quanta Services – Fortune 500 Company, "PWR", $3.9B in 2010
- Part of the Electric Division of Quanta Services
- 100+ Staff & Associates
- Senior staff have 25+ years industry experience
- Consulting and Utility Management Backgrounds

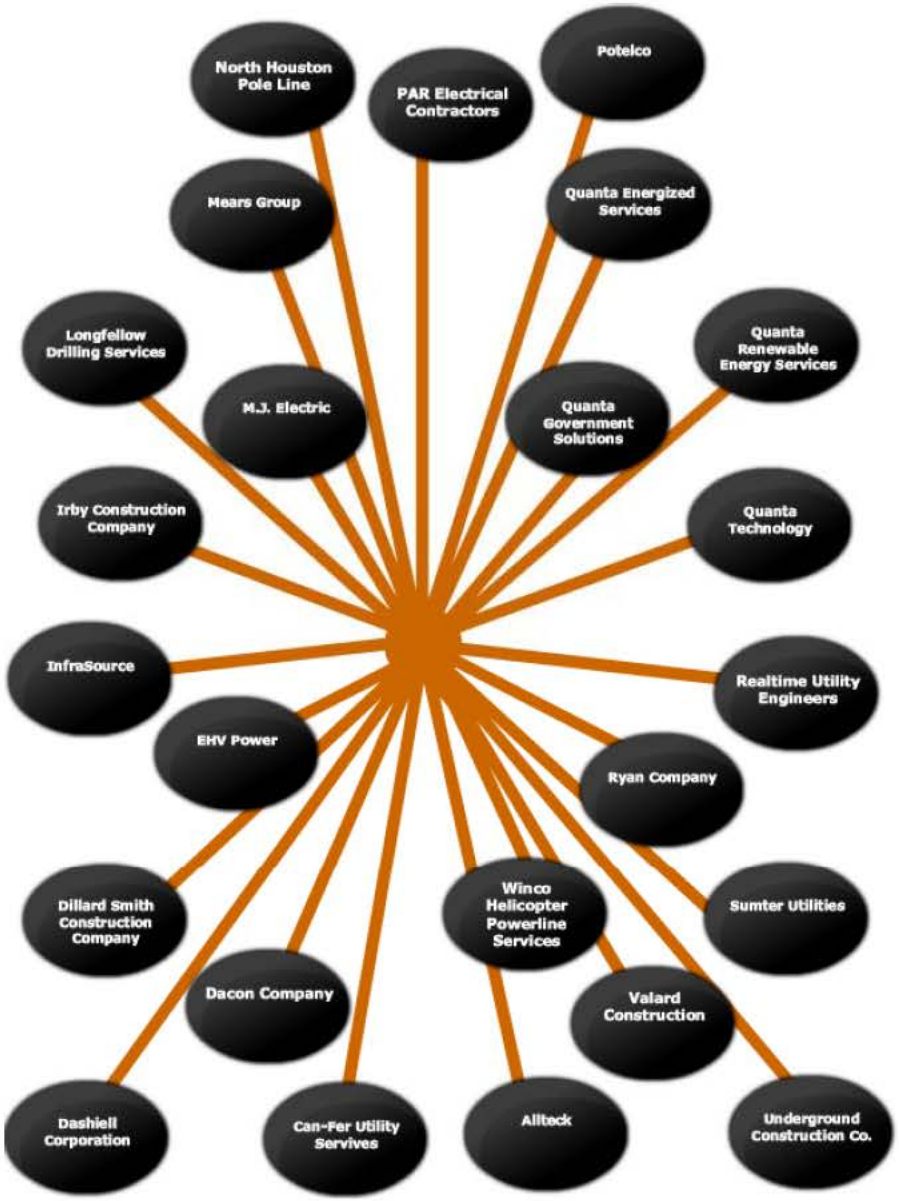

QUANTA TECHNOLOGY

ColumbiaGrid

© 2011 Quanta Technology LLC

Presentation Outline

1. Project Overview
2. Cost Estimating Methodology
3. Key Cost Estimating Assumptions
4. Project Cost Estimates
   i. Project Assumptions & Contingencies
5. Comparison with Columbia Grid Planning Cost Estimates

© 2011 Quanta Technology LLC

Project Overview

- Engaged by Columbia Grid Executive Committee to provide an independent, 3rd party cost estimate for PSANI Facilities Impacted by South to North Flows:
  1. Sammamish to Lakeside to Talbot Rebuild
  2. Bothell to SnoKing Reconductor
  3. SCL West Side Inductors
  4. Delridge to Duwamish Reconductor
  5. SnoKing to Maple Valley Reconductor
  6. Covington Transformer Addition
- Applied a common cost estimating methodology for each project
- Presented Quanta Technology draft cost estimates at July 15, 2011 Columbia Grid Executive Committee
- Revised based upon feedback
- Updated presentation on July 29, 2011

QUANTA TECHNOLOGY ColumbiaGrid

© 2011 Quanta Technology LLC

Quanta Technology Methodology

- Held face to face meeting with planning/engineering teams at PSE, SCL & BPA week of June 13th
- Determined specific construction scope of each project
- Collected project details such as:
  - Line Route & Substation Sites
  - Plan & Profile When Available
  - Layout Drawings When Available
  - Recent Project Cost Estimates
  - Equipment Budgetary Costs
- Applied Quanta Technology assumptions and developed initial project cost estimate
- Reviewed with each individual company for feedback
- Adjusted project cost estimate based upon executive committee feedback

QUANTA TECHNOLOGY ColumbiaGrid

© 2011 Quanta Technology LLC

Key Cost Estimating Assumptions

- Equipment
  - Vendor budgetary quotes or recent purchase orders used for pricing
- Foundations
  - Foundations selected are sizes that are typically used at this voltage for a competent soil
  - Drilled pier foundations will be utilized for the support structures and pad foundations will be used for large equipment supports
  - The Transformer base dimensions is 19'x10
  - The Transformer containment pit shall be a concrete
- Structures
  - Structures assumed are Dashiell (a Quanta Services Company) standard structures
  - Substation equipment, bus, and switch supports will consist of typical tube shape steel members
  - Dead-ends will consist of tapered tubular steel members

© 2011 Quanta Technology LLC

Key Assumptions cont.

- Transmission Lines
  - Clear access to the site is available
  - Self support structures used with no need for guy wires
  - Direct-embedded steel poles for tangent and piered foundations for dead-ends
  - NESC Heavy loading
  - Reconductor projects assume no structure replacements will be required
  - Engineering/Project Management/Internal assumed 14% of project cost
  - Highway crossing control costs are $25k per major intersection
  - Highway repair costs estimated at $25k per crossing (when needed)

- General
  - Standard forty (40) hour work week
  - No taxes are included
  - All soil is non-contaminated
  - Permitting estimates are included

© 2011 Quanta Technology LLC

Caveats

- No environmental or geotechnical data was available
- No highway repair costs currently identified as necessary for any of these projects
- No equipment specifications provided
- No one line diagrams for control and protection schemes provided
- No relay modification or upgrade work at remote stations were included
- Costs are in 2011 dollars
- Some equipment cost provided by vendors required a confidentiality agreement between Quanta Technology and the vendor

© 2011 Quanta Technology LLC

Sammamish to Lakeside to Talbot Rebuild

- Project includes:
  - Rebuilding the existing 115 kV double circuit line for 230 kV operation
    - Existing facilities are 2 115 kV wood H-frame structures in 100 ft ROW
  - Expanding the Lakeside Substation to add a 230 kV transformer
  - Initially operating one line at 230 kV and the other at 115 kV
- Two options under consideration for rebuilding the line
  1. Use double circuit towers
  2. Use two single circuit towers
- Total Cost Estimate
  1. W/ double circuit towers – $60.8 Million
  2. W/ single circuit towers – $64.5 Million

QUANTA TECHNOLOGY ColumbiaGrid

© 2011 Quanta Technology LLC

Sammamish-Talbot-Lakeside Single Circuit Cost Estimate

Transmission Line Estimate for Sammamish to Talbot 230 kV Transmission Line (SC)

Materials					
Sammamish to Lakeside				$	9,227,995
Lakeside to Talbot				$	9,673,256
	Total Materials			**$**	**18,901,251**
Labor					
Sammamish to Lakeside				$	4,307,760
Lakeside to Talbot				$	5,362,812
Mobilization and Demobilization				$	150,000
Public Outreach (In-House & Consultants)				$	600,000
3 FTEs x 2 years				$	2,000,000
Restoration & Mitigations				$	2,010,250
	Total labor			**$**	**14,430,822**
Overheads					
Engineering and Project Management			14%	**$**	**4,666,490**
Total				**$**	**37,998,563**

Contingency 15% **$43,698,348**

© 2011 Quanta Technology LLC

Sammamish-Talbot-Lakeside Double Circuit Cost Est.

Transmission Line Estimate for Sammamish to Talbot 230 kV Transmission Line (DC)

Materials			
Sammamish to Lakeside		$	8,826,440
Lakeside to Talbot		$	8,825,662
	Total Materials	**$**	**17,652,102**
Labor			
Sammamish to Lakeside		$	3,620,208
Lakeside to Talbot		$	4,506,492
Mobilization and Demobilization		$	150,000
Public Outreach (In-House & Consultants)		$	600,000
3 FTEs x 2 years		$	2,000,000
Restoration & Mitigations		$	2,010,250
	Total Labor	**$**	**12,886,950**
Overheads			
Engineering and Project Management	14%	$	4,275,467
Total			**$34,814,520**

Contingency 15% **$40,036,698**

© 2011 Quanta Technology LLC

Lakeside Substation Addition Cost Estimate

- Cost Breakdown to add a single 230/115 kV Transformer

BID SUMMARY	July 12, 2011

PROJECT DATA

Project Title: Lakeside Substation w/1 Autotransformer
Client: PSE

Price SUMMARY

		Subtotal	
Engineering & Services			
Engineering	$	621,345	25%
Field Services	$	312,500	13%
Subcontracts	$	1,295,275	53%
Const. & Proj. Mgmt	$	223,174	9%
Eng & Services:	**$**	**2,452,294**	
Materials			
Major Apparatus	$	5,744,900	65%
Misc. Apparatus	$	1,070,153	12%
Misc. Material	$	1,976,506	22%
Materials:	**$**	**8,791,559**	
Construction labor & Contingency			
All 3 substations	$	7,576,000	78%
10% Contingency	$	1,881,985	19%
Substation Security	$	200,000	2%
Construction labor	**$**	**9,657,985**	
Totals			
TOTALS	**$**	**20,901,838.00**	

© 2011 Quanta Technology LLC

Sammamish-Lakeside-Talbot Project Assumptions

- Key Project Assumptions
  - 4 Major Highway Crossings
  - $140,000 for WA State Patrol and Traffic Control
  - $400,000 Permit Costs
  - ROW was sufficient for project

- Contingencies
  - 10% contingency for substation cost because the actual layout of the substation expansion has not been determined
  - 15% contingency for the line rebuilds since soil type is not yet determined and additional foundations may be required

QUANTA TECHNOLOGY ColumbiaGrid

© 2011 Quanta Technology LLC

Bothell to SnoKing Reconductor Project

- This project is a reconductoring of the existing Bothell to SnoKing 230 kV line
- New conductor would use High Temperature Low Sag composite core
- Two conductor sizes are under consideration – 795 and 886
- 3M indicates that the core is the same for both conductors

© 2011 Quanta Technology LLC

Cost Estimate: Bothell to SnoKing Reconductor 795 ACCR

Transmission Line Estimate for Snoking to Bothell 230 kV Transmission Line

795 ACCR

	Line Length	Miles	3.68			
Materials						
Item	Description	Details		Unit	Unit Cost	Total
1	Conductor	795 ACCR Drake		Foot	$ 14.00	
5		Conductors per circuit	3			
6		Circuits	2			
7		Conductors Feet	116582.4			$ 1,632,154
8	Structures					
9		No Changes				
14	Hardware					
15				Lot	4.00%	$ 65,286
		Materials				**$ 1,697,440**

Labor						
Item	Description	Details	Hours/Week	Unit	Rate/Hours	Weekly Rate
18	**Labor - Installation**					
19	Crew Size	12	40	Manhrs	$ 200.00	$ 96,000.00
20						
21	Performance:	Miles per Week	Weeks Duration			Labor Total
22		2	3.68			$ 353,280
27	ROW Clearing	ACRES	45	AC	$ 800.00	$ 35,685
	Mobilization & Demob					$ 50,000
		Total labor Costs				**$ 438,965**
	Engineering, PM & Internal Review	14%				$ 299,097
		Total				**$ 2,435,501**

© 2011 Quanta Technology LLC

Cost Estimate: Bothell to SnoKing Reconductor 886 T15

Transmission Line Estimate for Snoking to Bothell 230 kV Transmission Line
886 -T15

	Line Length	Miles	3.68			
Materials						
Item	Description	Details		Unit	Unit Cost	Total
1	Conductor	ACCR 886-T15		Foot	$ 15.71	
5		Conductors per circuit	3			
6		Circuits	2			
7		Conductors Feet	116582.4			$ 1,831,510
8	Structures					
9		No Changes				
14	Hardware					
15				Lot	4.00%	$ 73,260
		Materials				**$ 1,904,770**

Labor						
Item	Description	Details	Hours/Week	Unit	Rate/Hours	Weekly Rate
18	**Labor - Installation**					
19	Crew Size	12	40	Manhrs	$ 200.00	$ 96,000.00
20						
21	Performance:	Miles per Week	Weeks Duration			Labor Total
22		2	3.68			$ 353,280
27	ROW Clearing	ACRES	45	AC	$ 800.00	$ 35,685
	Mobilization & Demob					$ 50,000
		Total labor Costs				**$ 438,965**
	Engineering, PM & Internal Review	15%				$ 351,560
		Total				**$ 2,695,295**

© 2011 Quanta Technology LLC

Bothell to SnoKing Assumptions

- Key Project Assumptions
  - Same basic line design as Maple Valley to SnoKing
  - No structural changes were needed
- Contingencies
  - No contingencies included since project appears to be well defined

© 2011 Quanta Technology LLC

Installing Two Inductors at SCL

- Two 6 ohm inductors
- One located at Broad St. Substation
- One located at NODO Substation

- Total Cost Estimate - ¸ 11 M (no land included)

© 2011 Quanta Technology LLC

Broad St Inductor Cost Estimate

PROJECT DATA

Project Title:	Broad Street Substation Series Inductors
Client:	SCL

Price SUMMARY

		Subtotal	
Engineering & Services			
Engineering	$	372,807	30%
Field Services	$	75,000	6%
Subcontracts	$	569,275	46%
Const. & Proj. Mgmt	$	223,174	18%
Eng & Services:	**$**	**1,240,256**	
Materials			
Major Apparatus	$	3,014,550	79%
Misc. Apparatus	$	29,000	1%
Misc. Material	$	773,980	20%
Materials:	**$**	**3,817,530**	
Construction labor & Land			
Labor	$	900,000	75%
Land	$	-	0%
SCL Inspection & Review	$	297,889	25%
Construction labor	**$**	**1,197,889**	
Totals			
TOTALS	**$**	**6,255,675**	

Contengency 15% $ 7,194,026

© 2011 Quanta Technology LLC

NODO Inductor Cost Estimate

PROJECT DATA

Project Title:	Broad Street Substation Series Inductors
Client:	SCL

Price SUMMARY

		Subtotal	
Engineering & Services			
Engineering	$	155,336	27%
Field Services	$	75,000	13%
Subcontracts	$	242,000	42%
Const. & Proj. Mgmt	$	100,218	18%
Eng & Services:	**$**	**572,554**	
Materials			
Major Apparatus	$	1,370,250	63%
Misc. Apparatus	$	29,000	1%
Misc. Material	$	773,980	36%
Materials:	**$**	**2,173,230**	
Construction labor & Contingency.			
Labor	$	900,000	83%
Land Contingency	$	-	0%
SCL Inspection & Review	$	182,289	17%
Construction labor	**$**	**1,082,289**	
Totals			
TOTALS	**$**	**3,828,073**	

Contingency 15% $ 4,402,284

© 2011 Quanta Technology LLC

Inductor Assumptions

- Key Project Assumptions
  - Land Cost for NODO was not included since real estate has been procured
  - Land cost for Broad was not yet included
  - 6 ohm inductor was assumed
  - GIS breakers were assumed at Broad St and NODO
  - One set of GIS breakers would be located by the inductors for the Broad St installation
- Contingencies
  - 15% since at very beginning of design stage in both locations

© 2011 Quanta Technology LLC

Delridge to Duwamish Reconductor Project

- This project is a reconductoring of the existing Delridge to Duwamish 230 kV line
- New conductor would use High Temperature Low Sag composite core
- Two conductor sizes are under consideration – 795 and 886
- 3M indicates that the core is the same for both conductors

© 2011 Quanta Technology LLC

Delridge to Duwamish 795 Reconductor Cost Estimate

Transmission Line Estimate for
Duwamish to Delridge 230 kV Transmission Line 795

Materials			
Duwamish to Delridge		$	1,161,912
	Total Materials	**$**	**1,161,912**
Labor			
Duwamish to Delridge		$	239,520
Mobilization and Demobilization		$	100,000
Restorations & Mitigations		$	62,375
Traffic Control		$	50,000
	Total labor	**$**	**451,895**
Overheads			
Engineering and Project Management	14%	**$**	**225,933**
Total		**$**	**1,839,739**

© 2011 Quanta Technology LLC

Delridge to Duwamish 886 Reconductor Cost Estimate

Transmission Line Estimate for
Duwamish to Delridge 230 kV Transmission Line 886

Materials			
Duwamish to Delridge		$	**1,303,831**
	Total Materials	**$**	**1,303,831**
Labor			
Duwamish to Delridge		$	239,520
Mobilization and Demobilization		$	100,000
Restorations & Mitigations		$	**62,375**
Traffic Control		$	**50,000**
	Total labor	**$**	**451,895**
Overheads			
Engineering and Project Management	**14%**	**$**	**245,802**

Total	**$2,001,527**

© 2011 Quanta Technology LLC

Delridge to Duwamish Assumptions

- Key Project Assumptions
  - No structural changes were needed
- Contingencies
  - No contingencies included since project appears to be well defined

© 2011 Quanta Technology LLC

Maple Valley to SnoKing Reconductor Project

- This project is a reconductoring of the existing Maple Valley to SnoKing 230 kV line
- New conductor would use High Temperature Low Sag composite core
- Two conductor sizes are under consideration – 795 and 886
- 3M indicates that the core is the same for both conductors

© 2011 Quanta Technology LLC

Cost Estimate: SnoKing to Maple Valley Reconductor 795 ACCR

Transmission Line Estimate for Maple Valley to Snoking 230 kV Transmission Line

795 ACCR

	Line Length	Miles	24.4			
Materials						
Item	Description	Details		Unit	Unit Cost	Total
1	Conductor	795 ACCR Drake		Foot	$ 14.00	
5		Conductors per circuit	3			
6		Circuits	2			
7		Conductors Feet	772992			$ 10,821,888
8	Structures					
9		No Changes				
14	Hardware					
15				Lot	4.00%	$ 432,876
		Materials				**$ 11,254,764**

Labor						
Item	Description	Details	Hours/Week	Unit	Rate/Hours	Weekly Rate
18	**Labor - Installation**					
19	Crew Size	12	40	Manhrs	$ 200.00	$ 96,000.00
20						
21	Performance:	Miles per Week	Weeks Duration			Labor Total
22		2	24.4			$ 2,342,400
27	ROW Clearing	ACRES	296	AC	$ 800.00	$ 236,606
	Mobilization & Demob					$ 150,000
		Total labor Costs				**$ 2,729,006**
	Engineering, PM & Internal Review	14%				$ 1,957,728
		Total				**$ 15,941,497**

QUANTA TECHNOLOGY

ColumbiaGrid

© 2011 Quanta Technology LLC

Cost Estimate: SnoKing to Maple Valley Reconductor 886-T15

Transmission Line Estimate for Maple Valley to Snoking 230 kV Transmission Line

886 -T15

	Line Length	Miles	24.4			
	Materials					
Item	Description	Details		Unit	Unit Cost	Total
1	Conductor	ACCR 886-T15		Foot	$ 15.71	
5		Conductors per circuit	3			
6		Circuits	2			
7		Conductors Feet	772992			$ 12,143,704
8	Structures					
9		No Changes				
14	Hardware					
15				Lot	4.00%	$ 485,748
		Materials				**$ 12,629,452**

	Labor					
Item	Description	Details	Hours/Week	Unit	Rate/Hours	Weekly Rate
18	**Labor - Installation**					
19	Crew Size	12	40	Manhrs	$ 200.00	$ 96,000.00
20						
21	Performance:	Miles per Week	Weeks Duration			Labor Total
22		2	24.4			$ 2,342,400
27	ROW Clearing	ACRES	296	AC	$ 800.00	$ 236,606
	Mobilization & Demob					$ 150,000
		Total labor Costs				**$ 2,729,006**
	Engineering, PM & Internal Review	14%				$ 2,150,184
		Total				**$ 17,508,643**

© 2011 Quanta Technology LLC

Maple Valley to SnoKing Assumptions

- Key Project Assumptions
  - Same basic line design as Bothell to SnoKing
  - No structural changes were needed
- Contingencies
  - No contingencies included since project appears to be well defined

© 2011 Quanta Technology LLC

Covington 500 kV Transformer Addition Project

- One 500 kV transformer bank would be added at Covington
- Relocate existing 500 kV bank
- Grading work to expand the yard
- T-Line relocations required for reconfiguring 500 kV buses

© 2011 Quanta Technology LLC

Cost Estimate: Covington 500kV Transformer Addition

PROJECT DATA

Project Title: Covington Substation
Client: BPA

Price SUMMARY

Base		Subtotal	
Engineering & Services			
Engineering	$	3,106,725	43%
Field Services	$	937,500	13%
Subcontracts	$	2,839,568	39%
Const. & Proj. Mgmt	$	318,496	4%
Eng & Services:	**$**	**7,202,289**	
Materials			
Major Apparatus	$	25,241,600	84%
Misc. Apparatus	$	1,920,960	6%
Misc. Material	$	2,808,907	9%
Materials:	**$**	**29,971,467**	
Construction labor & Contingency.....			
Both substations	$	9,550,000	51%
20% Contingency	$	9,344,751	49%
	$	-	0%
Construction labor	**$**	**18,894,751**	
Totals			
TOTALS	**$**	**56,068,507.00**	

QUANTA TECHNOLOGY

ColumbiaGrid

© 2011 Quanta Technology LLC

Covington Transformer Assumptions

- Key Project Assumptions
  - Covington is the site .vs. other locations still under consideration at Columbia Grid
- Contingencies
  - 20% since project is conceptual at this time

© 2011 Quanta Technology LLC

Project Notes:

- For high temp, low sag conductor 795 ACCR is recommended over 886 ACCR T15 based upon cost performance .vs. sag. Both satisfy CG loading requirements to achieve south to north TTC target with existing towers. Getting full current carrying capability of 886 ACCR T15 appears to require structural modifications based upon our preliminary review.
  - July 29th Update - Columbia Grid is currently recommending 795 ACCR for the reconductor projects

- BPA Covington Transformer Project was not as far developed as the other projects, therefore the QT Cost Estimate relies much more on QT assumptions than the other projects.

- Single Transformer cost was used for Lakeside since that is the basis for the cost estimate provided in the CG Report dated July, 2011.

QUANTA TECHNOLOGY

ColumbiaGrid

© 2011 Quanta Technology LLC

CG Cost Estimate .vs. QT Cost Estimate ($M)

	CG (1)	QT		
Project	Cost Estimate	Cost Estimate	Delta	Percent
Sammamish to Lakeside to Talbot & XFMR SCkt	$65.0	$64.5	-$0.5	-0.8%
Sammamish to Lakeside to Talbot & XFMR DCkt	$65.0	$60.8	-$4.2	-6.5%
Bothell to SnoKing Reconductor - 795 ACCR	$3.0	$2.4	-$0.6	-20.0%
Bothell to SnoKing Reconductor - 886-T15	$3.0	$2.7	-$0.3	-10.0%
SCL West Side Inductors (See Note 2)	$13.0	$11.6	-$1.4	-10.8%
Delridge to Duwamish Reconductor (see Note 3)	$2.0	$1.8	-$0.2	-10.0%
Covington Transformer (See Note 4)	$60.0	$56.1	-$3.9	-6.5%
SnoKing to Maple Valley 795 ACCR	na	$15.9	na	
SnoKing to Maple Valley 886-T15	na	$17.5	na	

Notes:

1) Source is June, 2011 Report from Columbia Grid.
2) Land acquistion cost not included. CG still working out final sizing.
3) 795 conductor size used for this comparison
4) Construction project scope not as developed as other projects.

© 2011 Quanta Technology LLC

Questions?

Contacts:
Don Morrow
(919) 334 3023
dmorrow@quanta-technology.com

John Widdifield
(919) 334 3091
jwiddifield@quanta-technology.com

QUANTA TECHNOLOGY

ColumbiaGrid

© 2011 Quanta Technology LLC

From: Timberman,Toni L (BPA) - TSE-TPP-2
To: Tesema,Berhanu K (BPA) - TPP-OPP-3
Subject: Re: BPA"s Project Requirements Diagrams (PRDs) for PSANI BOTHELL-SNOKING
Date: Friday, October 11, 2013 10:14:43 AM

Besides that, the conductor cost was not even included in the MOA. The 2.5 million was only the labor. I sent Uzma the document.

From: Tesema,Berhanu K (BPA) - TPP-OPP-3
Sent: Friday, October 11, 2013 10:08 AM Pacific Standard Time
To: Timberman,Toni L (BPA) - TSE-TPP-2
Subject: RE: BPA's Project Requirements Diagrams (PRDs) for PSANI BOTHELL-SNOKING

Yes. I thought one was a regular conductor. I don't have any reference of high temp conductor costs. Per discussion with Dave, our line design estimates high cost for high temp conductor (3 to 7 times higher). It seems the estimate used is very low.

Berhanu Tesema
BPA Transmission Services
Transmission Planning -TPP/DITT2
bktesema@bpa.gov
360-619-6819

From: Timberman,Toni L (BPA) - TSE-TPP-2
Sent: Friday, October 11, 2013 9:55 AM
To: Tesema,Berhanu K (BPA) - TPP-OPP-3
Subject: RE: BPA's Project Requirements Diagrams (PRDs) for PSANI BOTHELL-SNOKING

Ok – I thought from your comments below that you were comparing the cost of standard conductor vs. high temp, when it is really a cost comparison of two different sizes of hi temp.

From: Tesema,Berhanu K (BPA) - TPP-OPP-3
Sent: Friday, October 11, 2013 9:54 AM
To: Timberman,Toni L (BPA) - TSE-TPP-2
Subject: RE: BPA's Project Requirements Diagrams (PRDs) for PSANI BOTHELL-SNOKING

You are correct.

Berhanu Tesema
BPA Transmission Services
Transmission Planning -TPP/DITT2
bktesema@bpa.gov
360-619-6819

From: Timberman,Toni L (BPA) - TSE-TPP-2

Sent: Friday, October 11, 2013 9:41 AM
To: Tesema,Berhanu K (BPA) - TPP-OPP-3
Subject: RE: BPA's Project Requirements Diagrams (PRDs) for PSANI BOTHELL-SNOKING

Berhanu, it appears that the estimate was done for two different sizes of HI Temp Low Sag conductor, both 3M. 795 ACCR (not ACSR) vs. 886-T15 ACCR.

From: Tesema,Berhanu K (BPA) - TPP-OPP-3
Sent: Friday, October 11, 2013 8:18 AM
To: Timberman,Toni L (BPA) - TSE-TPP-2; Cathcart,David A (BPA) - TPP-OPP-3; Rodrigues,Melvin T (BPA) - TPP-OPP-3
Cc: Wilson,Jenny (BPA) - TPP-OPP-3; Custer,Leonard L (BPA) - TELC-TPP-3; Ashburn,Tyler (BPA) - TELC-TPP-3; Marleau,Michael L (BPA) - TEP-TPP-1; angela.dorf@hdrinc.com; Jusupovic,Jana D (BPA) - TPC-TPP-4
Subject: RE: BPA's Project Requirements Diagrams (PRDs) for PSANI BOTHELL-SNOKING

The Quanta estimate is attached for your reference (starting on page 14). The Quanta estimate for the ACSR 795 Drak conductor and the high temp conductor is very close, $2.4million vs $2.69million. I agree with Dave that the estimate for the high temp is on a low side and the rating of 1850A is probably adequate for now. However, the system is never normal and we should target the maximum rating possible when the opportunity arises to reconductor or rebuild, of course with consideration for cost.

On another note, the Snoking tap to Monroe-Echo Lake 500-kV line does not have a disconnect switch.

Thanks,

Berhanu Tesema
BPA Transmission Services
Transmission Planning -TPP/DITT2
bktesema@bpa.gov
360-619-6819

From: Timberman,Toni L (BPA) - TSE-TPP-2
Sent: Friday, October 11, 2013 7:08 AM
To: Cathcart,David A (BPA) - TPP-OPP-3; Tesema,Berhanu K (BPA) - TPP-OPP-3; Rodrigues,Melvin T (BPA) - TPP-OPP-3
Cc: Wilson,Jenny (BPA) - TPP-OPP-3; Custer,Leonard L (BPA) - TELC-TPP-3; Ashburn,Tyler (BPA) - TELC-TPP-3; Marleau,Michael L (BPA) - TEP-TPP-1; angela.dorf@hdrinc.com; Jusupovic,Jana D (BPA) - TPC-TPP-4
Subject: RE: BPA's Project Requirements Diagrams (PRDs) for PSANI BOTHELL-SNOKING

I am scheduling a meeting with both SCL and Puget within the next couple of weeks to discuss the MOU and will put this on the agenda. Because John Phillips from Puget will be there, he should be able to address the conductor cost and alternatives with Uzma – we would likely follow up with another technical meeting. I really appreciate your concern and insight about the potential cost of the project.
Toni

From: Cathcart,David A (BPA) - TPP-OPP-3
Sent: Thursday, October 10, 2013 5:41 PM
To: Tesema,Berhanu K (BPA) - TPP-OPP-3; Rodrigues,Melvin T (BPA) - TPP-OPP-3
Cc: Wilson,Jenny (BPA) - TPP-OPP-3; Custer,Leonard L (BPA) - TELC-TPP-3; Ashburn,Tyler (BPA) - TELC-TPP-3; Marleau,Michael L (BPA) - TEP-TPP-1; Timberman,Toni L (BPA) - TSE-TPP-2; angela.dorf@hdrinc.com; Jusupovic,Jana D (BPA) - TPC-TPP-4
Subject: RE: BPA's Project Requirements Diagrams (PRDs) for PSANI BOTHELL-SNOKING

The stated ampacity requirement of 1850A (winter) is for TCRM values related to N-1-X conditions. "Gold-plate" ampacities from the report call for 2500A-3000A ratings, while minimum ampacity to meet Deterministic NERC TPL performance levels is about1500A. BPA's current winter rating on these lines is 1550A; **SCL recently adopted an emergency rating for these lines, which is 1484A @ 0degC (up from 1288A used in the 2011 CG Studies)**. CG assumed an 1850A rating to acheive a "middle ground" of TCRM improvements.

I'm a little concerned after today's meeting that SCL is underestimating the true cost of implementing High Temp conductor for BOT-SNK. The overreliance on the exact Project Scope in the MOA is also troubling; it was written with very high level scope and costs in mind. The CG study team assumed HighTemp wire was relatively simple to implement, but the total Quantas estimate of $3M is starting to sound like an extreme low-ball. (My BOE esimtate is that BPA's total cost for our 0.5miles inc terminal equip upgrades is roughly $750K). Including the uncertainty and implementation costs for the HighTemp wire, it seems like the SCL design costs are destined to balloon.

If the BPA towers are remotely similar to the SCL towers on the line, and BPA is able to string a slightly larger conventional AAC/ACSR conductor with minimal (2) tower reinforcements, why doesn't SCL consider a more conventional upgrade approach? At the very least, SCL should be in contact with PSE about the type of High Temp wire they use and PSE's anecdotal experiences (maintenance, reliability, cost, etc). We should communicate this to them in some fashion.

I personally question the need to have much more than the prescribed 1850A in the long term; anything higher is to satisfy TCRM outage conditions that are gold plating the system. And if that ampacity can be met with minimal tower upgrades and traditional conductors, we need to convince SCL to at least examine it. SCL seems to be blindly following the MOA and its implication of reconductoring with "high-temp" wire.

BPA has a financial interest in their chosen design since we'll be paying for at least 1/3 of it.

my 2cents
--Dave

From: Siddiqi, Uzma [mailto:Uzma.Siddiqi@seattle.gov]
Sent: Thursday, October 10, 2013 11:29 AM
To: Marleau,Michael L (BPA) - TEP-TPP-1
Cc: Timberman,Toni L (BPA) - TSE-TPP-2; Angela.Dorf@hdrinc.com; Tesema,Berhanu K (BPA) - TPP-OPP-3; Wilson,Jenny (BPA) - TPP-OPP-3; Cathcart,David A (BPA) - TPP-OPP-3; Jusupovic,Jana D (BPA) - TPC-TPP-4; Ambrose, Philip; Risch, Bob
Subject: RE: BPA's Project Requirements Diagrams (PRDs) for PSANI

Mike,
Thank you for the PRDs.

You asked about the SK_MV lines--
The 2011 ColumbiaGrid plan and the subsequent BPA-PSE-SCL Agreement DO NOT reconductor

either of the 230kV SnoKing-MapleValley lines.

(In the agreement there is a partial payment to PSE to compensate them for the work that they are doing based on what the reconductor in the 2010 ColumbiaGrid plan would have cost.)

Uzma

From: Marleau,Michael L (BPA) - TEP-TPP-1 [mailto:mlmarleau@bpa.gov]
Sent: Thursday, October 10, 2013 11:23 AM
To: Siddiqi, Uzma; Ambrose, Philip
Cc: Timberman,Toni L (BPA) - TSE-TPP-2; Angela.Dorf@hdrinc.com; Tesema,Berhanu K (BPA) - TPP-OPP-3; Wilson,Jenny (BPA) - TPP-OPP-3; Cathcart,David A (BPA) - TPP-OPP-3; Jusupovic,Jana D (BPA) - TPC-TPP-4
Subject: BPA's Project Requirements Diagrams (PRDs) for PSANI

Uzma and Philip, attached is the cover sheet for the final PRD for Raver and Covington Substations (300515-01.pdf) and the preliminary PRD for Sno King Substation.

These are our planning documents to provide a project overview.

Since the Sno King PRD is preliminary, I wanted to verify if the Sno King –Maple Valley 230kV Line needed to be reconductored (therefore requiring the Sno King disconnects to be upgraded on the that line position).

Thanks,
Mike

Michael L. Marleau
Senior Project Manager - TEP
Office Phone: (360) 619-6053
email: mlmarleau@bpa.gov

DISTRICT: SNOHOMISH

MINIMUM HISTORICAL TEMPERATURE: -24.4 C (-28.9 F)
SEISMIC ZONE 3 = ZPA G-LEVEL: 0.40

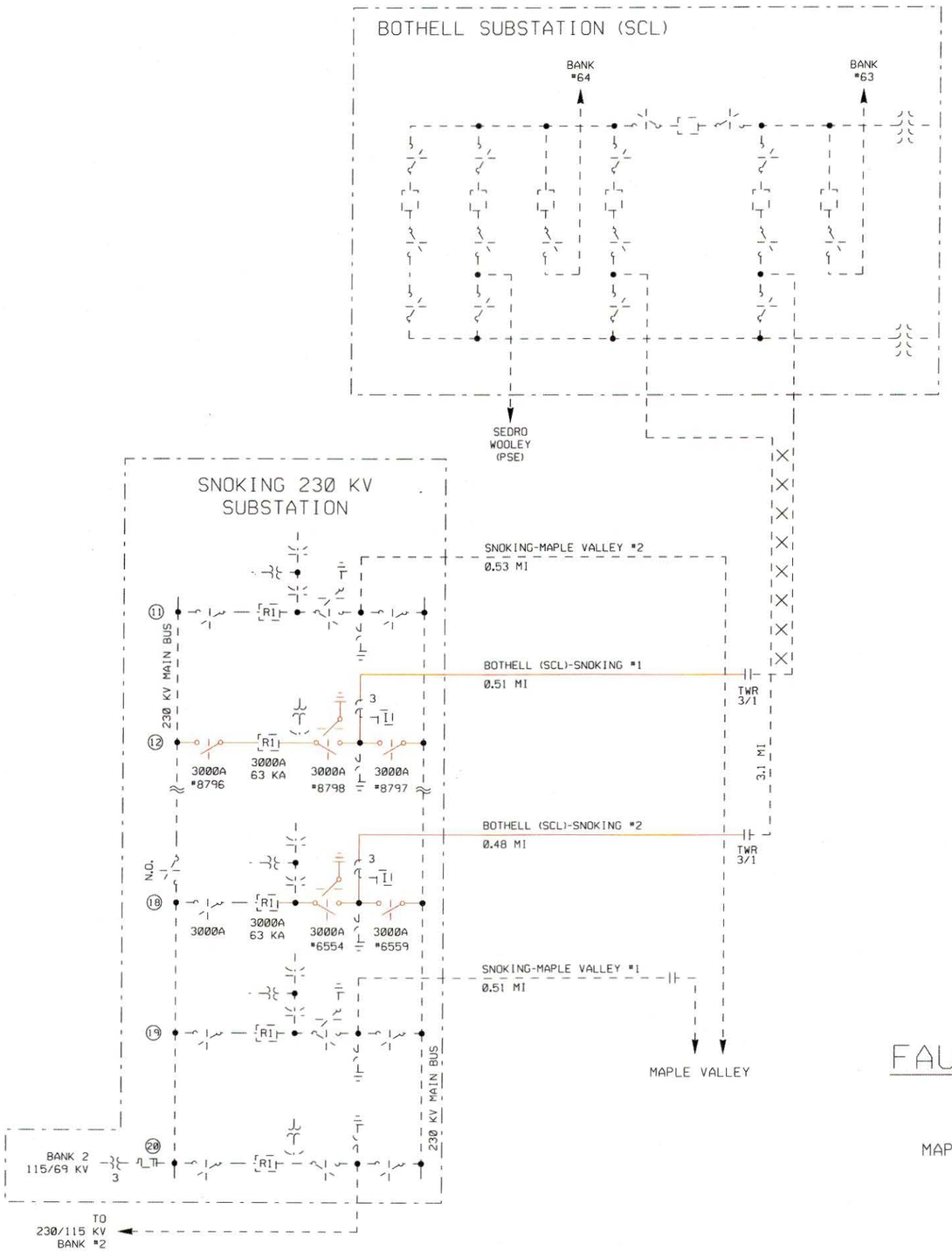

NOTES:

1. THIS PROJECT WILL IMPROVE SYSTEM RELIABILITY IN THE PUGET SOUND AREA AND WILL HELP TO SUPPORT WINTER SOUTH TO NORTH TRANSFERS.
2. RECONDUCTOR 0.51 MILE OF THE BOTHELL -SNOKING #1 LINE FROM THE SNOKING 230 KV BUS IN BAY 12 TO TOWER 3/1 TO ACHIEVE A RATING OF 1900A AT -5C AMBIENT FOR 100C MOT.. REPLACE THE EXISTING 1600 A DISCONNECTS (#8796, #8798 AND #8797) WITH 3000 A DISCONNECTS.
3. RECONDUCTOR 0.48 MILE OF THE BOTHELL - SNOKING #2 LINE FROM THE SNOKING 230 KV BUS IN BAY 18 TO TOWER 3/1 (CHANGE OF OWNERSHIP WITH SEATTLE CITY LIGHT) TO ACHIEVE A RATING OF 1900A AT -5C AMBIENT FOR 100C MOT. REPLACE THE EXISTING 1600 A DISCONNECTS #6554 AND #6559 WITH 3000A DISCONNECTS.
4. OUTAGE COORDINATION WITH SEATTLE CITY LIGHT (SCL) WILL BE REQUIRED DURING CONSTRUCTION OF THIS PROJECT.
5. COORDINATING ENGINEER:
   JENNY WILSON-TPP/OPP-3
   PHONE: (360) 619-6816
6. PLANNING ENGINEER:
   DAVE CATHCART TPP/OPP-3
   PHONE: (360) 619-6854
7. CAD TECHNICIAN:
   ALEX VASILIU-TPM/OPP-3
   PHONE: (360) 619-6773

LEGEND

- NEW THIS PROJECT
- EXISTING OR OTHER PROJECT
- BOUNDARY LINE
- CHANGE OF OWNERSHIP

DRAFT PRELIMINARY
SEP-30-2013

FAULT DUTY AMPS (2011)

		1LG	3LG
MAPLE VALLEY	230 KV	37,033	38,078
SNOKING	115 KV	33,697	37,011
SNOKING	230 KV	29,161	36,309
SNOKING	525 KV	13,298	17,242
BOTHELL	115 KV	43,230	39,267
BOTHELL	230 KV	32,767	37,066

NO.	COMPUTER REVISION ONLY	PLANNING ENGINEER	APPROVED

PROJECT REQUIREMENTS DIAGRAM

UNITED STATES DEPARTMENT OF ENERGY
BONNEVILLE POWER ADMINISTRATION
HEADQUARTERS, PORTLAND, OREGON

PROPOSED ENERGIZATION DATE(S): MMM-DD-20XX

OPERATIONS & PLANNING

PRELIMINARY APPROVED DATE

PLANNING ENGINEER: JENNY WILSON

BOTHELL–SNOKING #1 AND #2
230 KV LINE
RECONDUCTOR PROJECT

FINAL APPROVED DATE

SERIAL	SOURCE	SIZE	SHEET	REVISION
311814	TP	A3	1 OF 1	0

DISTRICT: COVINGTON

MINIMUM HISTORICAL TEMPERATURE: -22°C (-8°F)
SEISMIC ZONE ZPA G-LEVEL: 3=0.30
NERC CRITICAL INFRASTRUCTURE PROTECTION (CIP)
DESIGNATE SITE YES ☒ NO ☐

LEGEND

- NEW THIS PROJECT
- EXISTING OR OTHER PROJECT
- TO BE REMOVED
- FUTURE EQUIPMENT
- BOUNDARY LINE
- CHANGE OF OWNERSHIP

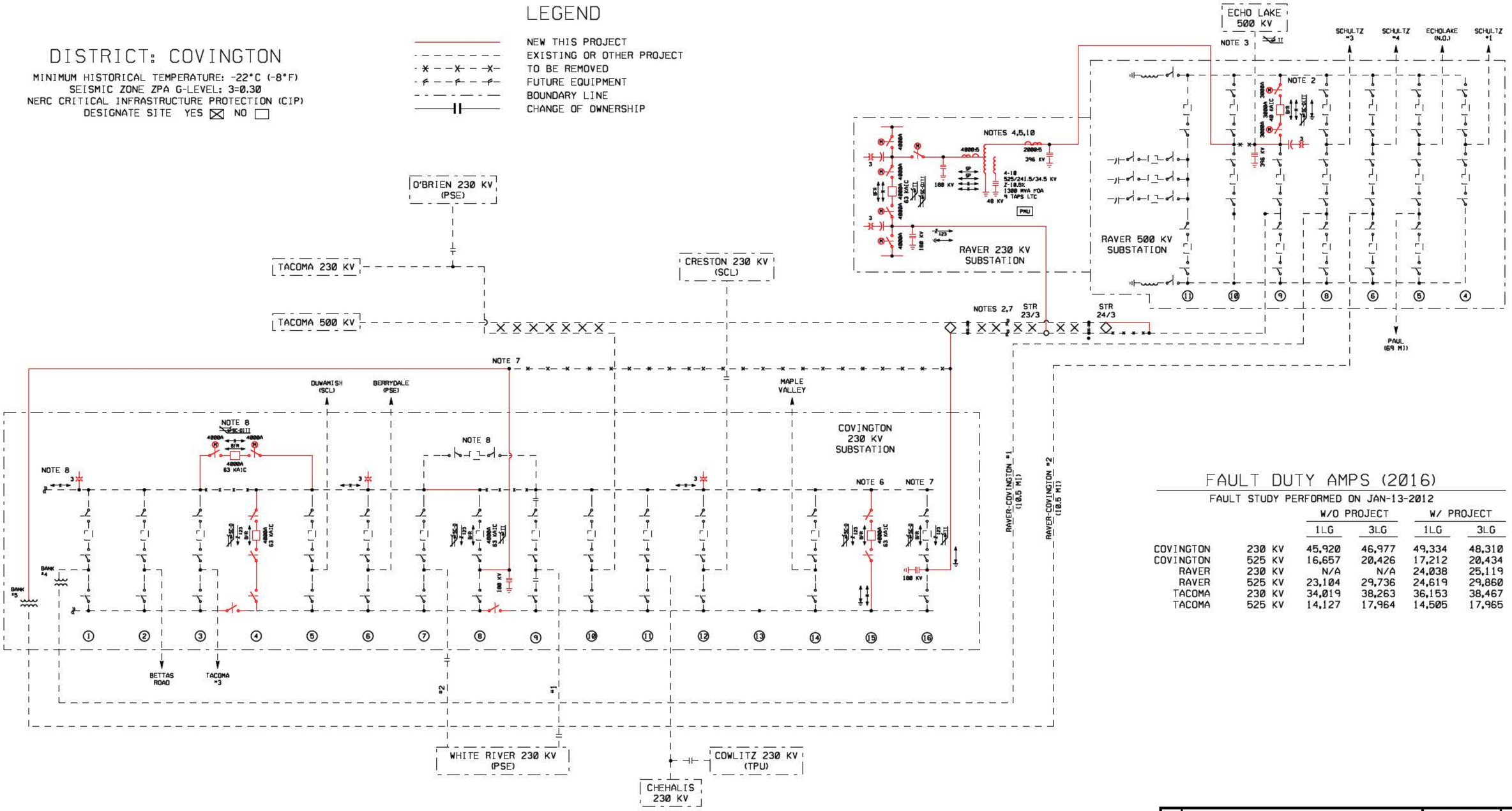

FAULT DUTY AMPS (2016)

FAULT STUDY PERFORMED ON JAN-13-2012

		W/O PROJECT		W/ PROJECT	
		1LG	3LG	1LG	3LG
COVINGTON	230 KV	45,920	46,977	49,334	48,310
COVINGTON	525 KV	16,657	20,426	17,212	20,434
RAVER	230 KV	N/A	N/A	24,038	25,119
RAVER	525 KV	23,104	29,736	24,619	29,860
TACOMA	230 KV	34,019	38,263	36,153	38,467
TACOMA	525 KV	14,127	17,964	14,505	17,965

FINAL
MAR-05-2012

NO.	COMPUTER REVISION ONLY	PLANNING ENGINEER	APPROVED

PROJECT REQUIREMENTS DIAGRAM

UNITED STATES DEPARTMENT OF ENERGY
BONNEVILLE POWER ADMINISTRATION
HEADQUARTERS, PORTLAND, OREGON

PROPOSED ENERGIZATION DATE(S): SEPT-01-2016

OPERATIONS & PLANNING

PRELIMINARY APPROVED DATE: B. TESEMA DEC-29-11

COORDINATING ENGINEER: DAVID CATHCART

FINAL APPROVED DATE

RAVER 500/230 KV TRANSFORMER ADDITION

SERIAL	SOURCE	SIZE	SHEET	REVISION
300515	TP	A3	1 OF 4	0

From:	Timberman,Toni L (BPA) - TSE-TPP-2
To:	"Siddiqi, Uzma"
Subject:	RE: MOA for PSANI Projects
Date:	Friday, October 11, 2013 11:40:00 AM

Ok – will try something else.

From: Siddiqi, Uzma [mailto:Uzma.Siddiqi@seattle.gov]
Sent: Friday, October 11, 2013 11:39 AM
To: Timberman,Toni L (BPA) - TSE-TPP-2
Subject: RE: MOA for PSANI Projects

All day.

From: Timberman,Toni L (BPA) - TSE-TPP-2 [tltimberman@bpa.gov]
Sent: Friday, October 11, 2013 11:32 AM
To: Siddiqi, Uzma
Subject: RE: MOA for PSANI Projects

John P. will be here for the Capacity Owner meeting next Thursday 9-noon. When is the col Grid meeting?

From: Siddiqi, Uzma [mailto:Uzma.Siddiqi@seattle.gov]
Sent: Friday, October 11, 2013 11:26 AM
To: Timberman,Toni L (BPA) - TSE-TPP-2
Subject: RE: MOA for PSANI Projects

He is probably coming for a CG member's caucus.
I come for the CG Planning meetings mostly--next one is next Thursday.

Uzma

From: Timberman,Toni L (BPA) - TSE-TPP-2 [tltimberman@bpa.gov]
Sent: Friday, October 11, 2013 9:25 AM
To: Siddiqi, Uzma
Subject: RE: MOA for PSANI Projects

Uzma, do you ever come down here for the same meetings as John P.? I was thinking that if you are both here, Berhanu and I could zip across the river to have this meeting.

From: Siddiqi, Uzma [mailto:Uzma.Siddiqi@seattle.gov]
Sent: Wednesday, October 09, 2013 5:12 PM
To: Timberman,Toni L (BPA) - TSE-TPP-2
Subject: RE: MOA for PSANI Projects

Just responded--crazy day...

From: Timberman,Toni L (BPA) - TSE-TPP-2 [tltimberman@bpa.gov]
Sent: Wednesday, October 09, 2013 11:58 AM
To: Siddiqi, Uzma
Subject: FW: MOA for PSANI Projects

Uzma, are you available for an 11-noon meeting on the 23rd?

From: Phillips, John M - Transmission [mailto:john.phillips@pse.com]
Sent: Wednesday, October 09, 2013 11:21 AM
To: Timberman,Toni L (BPA) - TSE-TPP-2; 'Uzma Siddiqi (uzma.siddiqi@seattle.gov)'
Subject: RE: MOA for PSANI Projects

I apologize. After reviewing my schedule, my flight doesn't leave until 2:15 on the 23rd so I am free between 10:30 and 12:30 that day. I will be in LA on the 25th.

From: Timberman,Toni L (BPA) - TSE-TPP-2 [mailto:tltimberman@bpa.gov]
Sent: Wednesday, October 09, 2013 11:16 AM
To: Phillips, John M - Transmission; 'Uzma Siddiqi (uzma.siddiqi@seattle.gov)'
Subject: RE: MOA for PSANI Projects

I am out of the office next Wednesday. Are you in the office on the 25th? If that works, I could stay over another night.

From: Phillips, John M - Transmission [mailto:john.phillips@pse.com]
Sent: Wednesday, October 09, 2013 11:00 AM
To: Timberman,Toni L (BPA) - TSE-TPP-2; 'Uzma Siddiqi (uzma.siddiqi@seattle.gov)'
Subject: RE: MOA for PSANI Projects

Unfortunately I have the WECC PCC meeting on the 23rd and 24th and a ColumbiaGrid meeting on the 5th. I will be in Portland next Wednesday, 10/16, and available in the afternoon if that is a possibility. Otherwise we may need to have a conference call but face to face would be better.

From: Timberman,Toni L (BPA) - TSE-TPP-2 [mailto:tltimberman@bpa.gov]
Sent: Wednesday, October 09, 2013 10:29 AM
To: Phillips, John M - Transmission; 'Uzma Siddiqi (uzma.siddiqi@seattle.gov)'
Subject: MOA for PSANI Projects

Hi John and Uzma,

Now that we are ramping up efforts associated with the PSANI Projects it seems like a good time to review the MOA to determine what, if any, changes need to be made, and to discuss the process in general.

I will be up there for meetings on October 23 and 24, with free time between 11-noon on the 23rd, or after 3:00 that day, and any time on the morning of the 24th.

Let me know if you would like to get together during any of these times.

I believe I will be in Tacoma for a meeting from 1-2 on November 5, so if nothing earlier works perhaps we can meet on that day.

Toni

From:	Timberman,Toni L (BPA) - TSE-TPP-2
To:	"Risch, Bob"
Cc:	"Ambrose, Philip"; "Siddiqi, Uzma"
Subject:	RE: Estimate for PSANI Projects
Date:	Friday, October 11, 2013 12:00:00 PM

You are right – I don't know why I was not seeing that. Sorry for the false alarm.

From: Risch, Bob [mailto:Bob.Risch@seattle.gov]
Sent: Friday, October 11, 2013 11:57 AM
To: Timberman,Toni L (BPA) - TSE-TPP-2
Cc: Ambrose, Philip; Siddiqi, Uzma
Subject: RE: Estimate for PSANI Projects

Hi Toni,

In looking at the estimates on pages 15/16 of the Quanta document, the labor is approximately $440,000 and the total project cost (adding the top orange line "Materials" with the bottom orange line "Total Labor Costs" and the blue line "Engineering, PM and Internal review") is $2,435,500.

The larger of the two conductors (page 16) has a total project cost of $2,695,295.

I did an estimate for a standard ACSR conductor option, using bundled Pheasant, which resulted in a total project cost of $5.5M, which included the replacement of all 16 structures in the double circuit line.

Please let us know if you have additional questions.

Regards,

Bob Risch, PE
Transmission Engineering
Seattle City Light
206-684-3269

From: Siddiqi, Uzma
Sent: Friday, October 11, 2013 11:20 AM
To: Risch, Bob
Cc: Timberman,Toni L (BPA) - TSE-TPP-2; Ambrose, Philip
Subject: RE: Estimate for PSANI Projects

Bob,
Can you please respond to Toni's questions about the estimate SCL provided to ColumbiaGrid in 2010 for the BO-SK reconductor project?

(Please cc Phil and myself on the response).
Thanks,

Uzma

From: Timberman,Toni L (BPA) - TSE-TPP-2 [tltimberman@bpa.gov]
Sent: Friday, October 11, 2013 9:50 AM
To: Siddiqi, Uzma
Subject: Estimate for PSANI Projects

Hi Uzma,

You probably already have this document, but on p. 15 and 16 are the estimates prepared for the Bothell-SnoKing reconductor. My immediate concern is that in the MOA the estimated project cost was $2.5 million, but that is only the labor cost for the smaller conductor, not including the $1.7 million for the conductor itself.

I know you are not sure of the cost until you go out for bids, but this is a significant enough difference that I thought you should be aware.

Considering the high cost of this type of conductor, did anyone do an estimate for standard conductor, including any structure replacements, or was that not an option for certain reasons?

Toni

From:	Dorf, Angela
To:	Timberman,Toni L (BPA) - TSE-TPP-2; jwilson@bpa.gov; Custer,Leonard L (BPA) - TELC-TPP-3; Cathcart,David A (BPA) - TPP-OPP-3; tashburn@bpa.gov
Cc:	Marleau,Michael L (BPA) - TEP-TPP-1
Subject:	PSANI PRD Scoping Meeting Notes
Date:	Wednesday, October 16, 2013 1:40:25 PM
Attachments:	10-03-13 PSANI PRD Meeting Notes.pdf

Attached please find the meeting notes from the PSANI SnoKing PRD Meeting. If you have any questions or concerns, please let me know.

Thank you,

ANGELA DORF, PLS

HDR, Inc.
Project Manager

1001 SW 5th Ave. STE 1900 | Portland, OR 97204
503.727-3945 | (b) (6) [redacted]
angela.dorf@hdrinc.com | hdrengineering.com
Follow Us – Facebook | Twitter | YouTube

PSANI Project

PRD Scoping Meeting Notes

October 3, 2013 @1:30PM

Attendees:

Name:	Organization	Role	Contact Info:
BPA Team			
Mike Marleau	BPA	Project Manager (Substations)	mlmarleau@bpa.gov
Angela Dorf	HDR	Assistant Project Manager	angela.dorf@hdrinc.com
Toni Timberman	BPA	Customer Service	tltimberman@bpa.gov
Jenny Wilson	BPA	Coordinating Engineer	jwilson@bpa.gov
Dave Cathcart	BPA	Planning Engineer	dacathcart@bpa.gov
Leonard Custer	BPA	Transmission Engineer	llcuster@bpa.gov

- PSANI PRD Scoping
  - SnoKing-Bothell #1 and #2 Lines – reconductor, single bundle and BPA structure rebuild and upgrade a few other poles/structures.
  - Len will send Jenny tower numbers for structure upgrades.
  - Per Dave, we are sticking with 1900A. He will verify with Berhanu.
  - BPA will revisit with SCL on the need to cross over the 500kV line.
  - Mike to send Jenny the standard to use for the disconnect switches (2000A or 3000A).
  - In service date set for October 2, 2016.
  - RAS Intertie PRD will be updated.

- Action item list:
  - Mike to include Toni on Project Manager meeting notices.
  - Mike to verify standard for disconnect switches (2000A/3000A).
  - Jenny to route to sub design and schedule a coordination meeting.
  - Mike to send LLR information to Jenny once received.

From: Timberman,Toni L (BPA) - TSE-TPP-2
To: "john.phillips@pse.com"
Subject: Re: Urgent-Meet tomorrow?
Date: Wednesday, October 23, 2013 12:36:15 PM

Ok-I will be back in the office tomorrow and will schedule something. I will get you the PR contacts.

----- Original Message -----
From: Phillips, John M - Transmission [mailto:john.phillips@pse.com]
Sent: Wednesday, October 23, 2013 12:27 PM Pacific Standard Time
To: 'Siddiqi, Uzma' <Uzma.Siddiqi@seattle.gov>; Timberman,Toni L (BPA) - TSE-TPP-2
Subject: RE: Urgent-Meet tomorrow?

I am headed to the airport for PCC. Let's find a date to at least have a call. I also have a request from our project team to get Corporate Communication contacts at BPA and SCL for future coordination on project messaging.

John Phillips
Manager of Transmission Contracts
Electric Transmission
Location: 355 110 Ave NE, Bellevue WA
Phone: (425) 462-3579

-----Original Message-----
From: Siddiqi, Uzma [mailto:Uzma.Siddiqi@seattle.gov]
Sent: Wednesday, October 23, 2013 10:11 AM
To: Timberman,Toni L (BPA) - TSE-TPP-2; Phillips, John M - Transmission
Subject: RE: Urgent-Meet tomorrow?

I can change pretty much anything on my calender except for a 12:30-1:30 meeting.

-----Original Message-----
From: Timberman,Toni L (BPA) - TSE-TPP-2 [mailto:tltimberman@bpa.gov]
Sent: Wednesday, October 23, 2013 10:09 AM
To: Siddiqi, Uzma; 'john.phillips@pse.com'
Subject: Urgent-Meet tomorrow?

I am now available any time tomorrow in Seattle to discuss PSANI Project MOA.

I need to know by 11:30 whether to stay another night to meet with you tomorrow or check out of my hotel and drive home tonight.

Toni

From: Tesema,Berhanu K (BPA) - TPP-OPP-3
To: Marleau,Michael L (BPA) - TEP-TPP-1; Cathcart,David A (BPA) - TPP-OPP-3; Custer,Leonard L (BPA) - TELC-TPP-3; Ashburn,Tyler (BPA) - TELC-TPP-3
Cc: Gentry,Natasha A (BPA) - TELC-TPP-3; Wilson,Jenny (BPA) - TPP-OPP-3; Timberman,Toni L (BPA) - TSE-TPP-2; Tyson,Ivy L (BPA) - TPS-TPP-1
Subject: RE: Sno King - Bothell Lines
Date: Friday, October 25, 2013 2:07:48 PM

I support Mike's idea since it is only a mile.

Berhanu Tesema
BPA Transmission Services
Transmission Planning -TPP/DITT2
bktesema@bpa.gov
360-619-6819

From: Marleau,Michael L (BPA) - TEP-TPP-1
Sent: Friday, October 25, 2013 11:18 AM
To: Cathcart,David A (BPA) - TPP-OPP-3; Tesema,Berhanu K (BPA) - TPP-OPP-3; Custer,Leonard L (BPA) - TELC-TPP-3; Ashburn,Tyler (BPA) - TELC-TPP-3

Cc: Gentry,Natasha A (BPA) - TELC-TPP-3; Wilson,Jenny (BPA) - TPP-OPP-3; Timberman,Toni L (BPA) - TSE-TPP-2; Tyson,Ivy L (BPA) - TELP-TPP-3

Subject: RE: Sno King - Bothell Lines

Thanks Dave, I really appreciate the background.

My thoughts on the ratings and moving forward. The reason we're doing the PSANI project in the first place is to upgrade the Seattle Area to avoid bottlenecks and restrictions. It is a significant bundle of projects with a great deal of planning and coordination with numerous BPA groups, foreign utilities, regulatory agencies, and other entities even before we start executing the design and construction. That being said, I suggest we move forward with a rebuild for the upper range of what the study recommends (3000A) with conventional conductor. The 1900A rating is at the upper limit of a reconductor project anyway. So if we rebuild, we might as well rebuild to the upper limit. Sure, it will cost more but I don't think the incremental cost would be prohibitive.

The original estimates by Quanta shows the Bothell-SnoKing line reconductored with either 795 ACCR or 886-T15 ACCR rather than conventional conductor. I don't believe these conductors have ratings for 3000A at 105 deg. C so SCL would likely need to rebuild their sections of the lines as well if they would like to match our rating. If they rebuild, they may as well rebuild with conventional conductor to match what we propose. That would also resolve the second coordination issue we have is that of the physical interface at interconnection point between SCL and BPA.

This would also allow us to move forward with developing only one estimate.

So, that's my suggestion on how we should approach our next conference call with SCL.

If everyone can chime in with their opinions by next Friday (11/1/13), I'd appreciate it.

Thanks,
Mike

From: Cathcart,David A (BPA) - TPP-OPP-3
Sent: Thursday, October 24, 2013 8:10 PM
To: Marleau,Michael L (BPA) - TEP-TPP-1; Tesema,Berhanu K (BPA) - TPP-OPP-3; Custer,Leonard L (BPA) - TELC-TPP-3; Ashburn,Tyler (BPA) - TELC-TPP-3
Cc: Gentry,Natasha A (BPA) - TELC-TPP-3; Wilson,Jenny (BPA) - TPP-OPP-3; Timberman,Toni L (BPA) - TSE-TPP-2
Subject: RE: Sno King - Bothell Lines

Mike:
To answer your phone question, the 2500A rating comes from the lower end of a range described on page 4 section 2.1 and again in the table on page 48-49 of the CG report. The absolute maximum needed to meet the initial CG TCRM requirements was roughly 2900A for an outage condition (N-1-2) that we typically do not build for. 2500A is would be required for a more plausible N-2 condition WHILE eliminating a Bothell-Snoking local RAS scheme. The 1900A is only needed to meet NERC planning critieria while maintaining the local RAS scheme.

Upon review, the original report did recommend an approximate 3000A rating for each circuit, but that was based on minimizing the TCRM value, rather than traditional planning standards. I'm thinking that our "rebuild option" estimates should be based on a 3000A conductor, which given Tyler and Len's feedback is going to be a high level estimate of scope at best—unless we have them do more detailed analysis up front.

I'm still wondering if there is any way BPA line design could perform the tower/conductor analysis on SCL's behalf if they lack the design expertise to truly eliminate the Conventional conductor option. Perhaps it is worth the incremental investment to just rebuild our sections with 2-bundled wire and upgrade our Terminal equipment and let SCL worry about managing the bottleneck. For sure we'd eliminate a RAS scheme and never have to worry about outage coordination for these circuits. I know it will be worth the short term headache I'm having…

Hope this helps
--Dave

From: Marleau,Michael L (BPA) - TEP-TPP-1
Sent: Thursday, October 24, 2013 10:05 AM
To: Tesema,Berhanu K (BPA) - TPP-OPP-3; Custer,Leonard L (BPA) - TELC-TPP-3; Ashburn,Tyler (BPA) - TELC-TPP-3
Cc: Gentry,Natasha A (BPA) - TELC-TPP-3; Cathcart,David A (BPA) - TPP-OPP-3; Wilson,Jenny (BPA) - TPP-OPP-3; Timberman,Toni L (BPA) - TSE-TPP-2
Subject: RE: Sno King - Bothell Lines

Thanks everyone. I'm setting up a meeting with SCL so we can continue the rating discussion.

From: Tesema,Berhanu K (BPA) - TPP-OPP-3
Sent: Thursday, October 24, 2013 9:42 AM
To: Custer,Leonard L (BPA) - TELC-TPP-3; Ashburn,Tyler (BPA) - TELC-TPP-3
Cc: Gentry,Natasha A (BPA) - TELC-TPP-3; Marleau,Michael L (BPA) - TEP-TPP-1; Cathcart,David A (BPA) - TPP-OPP-3; Wilson,Jenny (BPA) - TPP-OPP-3
Subject: RE: Sno King - Bothell Lines

Len,
As you know, this area is very congested and the maximum rating we can get on these lines is the better for the future. The minimum requirement is 1900A rating on these lines at this time. SCL is in the process of selecting high temp conductors at this time. It may be a while (2015) before they can make a decision on the selection. We are trying to avoid to rebuild or reconductor a few years down the road if the SCL rating is greater than 1900A. SCL indicated the ratings are about 1850A, but they are not certain until they make a selection.

On the other hand, you told us that the high temp conductors are very expensive. I am not sure if SCL realizes how expensive it could be and we will be paying 1/3rd per the MOA. We will verify if they know the cost on the next conference call. At the mean time, we are thinking if we can help them determine what it takes to use regular conductors and achieve the 2500A rating on the whole line (which may be less expensive than the high temp), we are set for a long time. Anything you can do to facilitate this is appreciated. So, if it helps to facilitate, the minimum rating is 1900A and maximum rating is 2500A.

Let me know if you have any questions.

Berhanu Tesema
BPA Transmission Services
Transmission Planning -TPP/DITT2
bktesema@bpa.gov
360-619-6819

From: Custer,Leonard L (BPA) - TELC-TPP-3

Sent: Thursday, October 24, 2013 9:09 AM

To: Ashburn,Tyler (BPA) - TELC-TPP-3

Cc: Gentry,Natasha A (BPA) - TELC-TPP-3; Marleau,Michael L (BPA) - TEP-TPP-1; Cathcart,David A (BPA) - TPP-OPP-3; Wilson,Jenny (BPA) - TPP-OPP-3; Tesema,Berhanu K (BPA) - TPP-OPP-3

Subject: FW: Sno King - Bothell Lines

Tyler,
It seems that SCL and BPA are not certain what the load requirements should be for these lines. Until the load requirements are final, it does not seem like we can do credible design work or estimates.

Mike,
Please include Tyler in future scoping or design meetings.

Thanks,
Len

From: Marleau,Michael L (BPA) - TEP-TPP-1

Sent: Wednesday, October 23, 2013 3:23 PM

To: 'Siddiqi, Uzma'; Ambrose, Philip

Cc: Wilson,Jenny (BPA) - TPP-OPP-3; Timberman,Toni L (BPA) - TSE-TPP-2; Cathcart,David A (BPA) - TPP-OPP-3; Tesema,Berhanu K (BPA) - TPP-OPP-3; Jusupovic,Jana D (BPA) - TPC-TPP-4; Dorf, Angela; Custer,Leonard L (BPA) - TELC-TPP-3

Subject: Sno King - Bothell Lines

Hi Uzma, I'd like to get together for another conference call (maybe next week or the week after). I'd like to continue coordinating our design approach so we can develop the estimates further.

Are there any days/times that are better for you and your team?

Thanks,
Mike

Michael L. Marleau
Senior Project Manager - TEP
Office Phone: (360) 619-6053
email: mlmarleau@bpa.gov

From: Timberman,Toni L (BPA) - TSE-TPP-2
To: "Dorf, Angela"
Subject: Accepted: PSANI Bothell-SnoKing Project

From: Jusupovic,Jana D (BPA) - TPC-TPP-4
To: Timberman,Toni L (BPA) - TSE-TPP-2
Subject: RE: PSANI Project Info
Date: Friday, November 08, 2013 1:17:01 PM

Yes, please!

From: Timberman,Toni L (BPA) - TSE-TPP-2
Sent: Friday, November 08, 2013 1:08 PM
To: Jusupovic,Jana D (BPA) - TPC-TPP-4
Subject: PSANI Project Info

Jana, I will be scheduling a meeting with Puget and Seattle to specifically discuss possible changes to the agreement. Do you want to be included in the meeting?

From: Timberman,Toni L (BPA) - TSE-TPP-2
Sent: Friday, October 04, 2013 2:46 PM
To: Dexter,Lisa L (CONTR) - TSE-TPP-2
Subject: for bi-weekly

In January of 2012 BPA, Puget and Seattle executed a Memorandum of Agreement in which commitments were made to build certain transmission reinforcement projects in the Puget Sound area, for the purpose of relieving congestion and reducing the number and severity of transmission curtailments. These projects are commonly referred to as the "PSANI Projects". The cost of the Seattle and Puget projects will be allocated roughly 1/3 to each of the Parties, with BPA additionally paying the full cost of the BPA projects. Efforts are now ramping up and the Project Managers from each utility have been meeting to more clearly define and coordinate the scope, design and schedule.

Seattle is on track to complete the Bothell to SnoKing Reconductor Project, the Broad Street Inductor Project, the North Downtown Inductor Project and the Delridge to Duwamish Reconductor Project in 2016. BPA has a role in the Bothell to SnoKing project, needing to reconductor our ½-mile owned sections of both Bothell-SnoKing #1 and #2 230 kV lines.

Puget Sound Energy is delaying expected energization of their "Eastside 230" project from 2017 to 2018 due to complex siting issues. The "Eastside 230" consists of the Sammamish to Lakeside to Talbot Rebuild Project, and the Lakeside 230 kV Transformer Addition Project.

BPA, in addition to the Bothell-SnoKing work, is proceeding with development of the plan of service for addition of a 500/230 kV transformer at Raver, including reconfiguration of the Raver-Tacoma #1 & #2 transmission lines and additional reconfigurations at Covington Substation. This work is scheduled for 2016 completion.

BPA is also scoping the Northern Intertie RAS Improvement Project, replacing the existing communication and relaying equipment and ensuring that it meets current BPA Design and Operations Standards for Communications, Relaying, and RAS. There has been some resistance from BC Hydro regarding expanding the scope of the RAS to include additional contingencies that

were identified in the Columbia Grid Study, but discussions between our respective Planning staff will hopefully lead to the desired outcome. The new equipment being installed by BPA will include the flexibility to add the contingencies once agreement is reached with BC Hydro. The equipment upgrades are tentatively scheduled to be completed in 2016.

From: Jusupovic,Jana D (BPA) - TPC-TPP-4
To: Timberman,Toni L (BPA) - TSE-TPP-2
Subject: RE: PSANI Project Info
Date: Friday, November 08, 2013 1:20:47 PM
Attachments: TFY130641 - PSANI MOA Business Case 01102012.doc

---

If it helps, this was the business case for PSANI....it'll at least give you more info on the project. Sections 19, 24 and 26 would be most beneficial for you.

From: Timberman,Toni L (BPA) - TSE-TPP-2
Sent: Friday, November 08, 2013 1:08 PM
To: Jusupovic,Jana D (BPA) - TPC-TPP-4
Subject: PSANI Project Info

Jana, I will be scheduling a meeting with Puget and Seattle to specifically discuss possible changes to the agreement. Do you want to be included in the meeting?

From: Timberman,Toni L (BPA) - TSE-TPP-2
Sent: Friday, October 04, 2013 2:46 PM
To: Dexter,Lisa L (CONTR) - TSE-TPP-2
Subject: for bi-weekly

In January of 2012 BPA, Puget and Seattle executed a Memorandum of Agreement in which commitments were made to build certain transmission reinforcement projects in the Puget Sound area, for the purpose of relieving congestion and reducing the number and severity of transmission curtailments. These projects are commonly referred to as the "PSANI Projects". The cost of the Seattle and Puget projects will be allocated roughly 1/3 to each of the Parties, with BPA additionally paying the full cost of the BPA projects. Efforts are now ramping up and the Project Managers from each utility have been meeting to more clearly define and coordinate the scope, design and schedule.

Seattle is on track to complete the Bothell to SnoKing Reconductor Project, the Broad Street Inductor Project, the North Downtown Inductor Project and the Delridge to Duwamish Reconductor Project in 2016. BPA has a role in the Bothell to SnoKing project, needing to reconductor our ½-mile owned sections of both Bothell-SnoKing #1 and #2 230 kV lines.

Puget Sound Energy is delaying expected energization of their "Eastside 230" project from 2017 to 2018 due to complex siting issues. The "Eastside 230" consists of the Sammamish to Lakeside to Talbot Rebuild Project, and the Lakeside 230 kV Transformer Addition Project.

BPA, in addition to the Bothell-SnoKing work, is proceeding with development of the plan of service for addition of a 500/230 kV transformer at Raver, including reconfiguration of the Raver-Tacoma #1 & #2 transmission lines and additional reconfigurations at Covington Substation. This work is scheduled for 2016 completion.

BPA is also scoping the Northern Intertie RAS Improvement Project, replacing the existing

communication and relaying equipment and ensuring that it meets current BPA Design and Operations Standards for Communications, Relaying, and RAS. There has been some resistance from BC Hydro regarding expanding the scope of the RAS to include additional contingencies that were identified in the Columbia Grid Study, but discussions between our respective Planning staff will hopefully lead to the desired outcome. The new equipment being installed by BPA will include the flexibility to add the contingencies once agreement is reached with BC Hydro. The equipment upgrades are tentatively scheduled to be completed in 2016.

CAPITAL PROJECT PROPOSAL
- *Business Case* -

Print Options >> | Spell Check | Unprotect

PROJECT IDENTIFICATION		
01	Project Number:	TFY130641
02	Name of Project:	PSANI MOA (Puget Area Study Team Recommendation)
03	Asset Category:	Transmission [T]
04	Portfolio:	[T] Main Grid
05	Sub-Portfolio:	5785 - Seattle/Puget Sound Area
06	Discretionary or Non-Discretionary Project?	Non-Discretionary
06A	*If Non-Discretionary, please provide explanation:*	Required to meet NERC TPL-003 criteria for N-2 outage conditions in the 10-year planning horizon, also required as part of the Regional agreement with Puget Sound Area utilities in the Columbia Grid Transmission Expansion Plan
07	Approval for:	New Start
08	Investment Type:	Program Expansion
09	Emergency?	☐ **YES** ☒ **NO**
09A	*If "YES", please provide explanation:*	

KEY PROJECT DATES		
10	Business Case Submission Date ***or*** Revision Date:	1/10/2012
11	Planned Start Date:	10/1/2012
12	Note Regarding Planned Start Date:	Other
12A	*If "Other", please provide explanation:*	Design Start Date
13	Planned Completion Date:	9/30/2017

PROJECT INVESTMENT SUMMARY TABLE | **HELP**

The box below is where you will paste in the "Project Investment Summary" table from Excel [refer to Help instructions above

Dollars in Thousands	Prior Years	FY 2012	FY 2013	FY 2014	FY 2015	FY 2016	Future Years	Total Project
Capital Investment								
Direct Costs	-	-	(6,950)	(22,370)	(19,700)	(11,240)	-	(60,260)
Overheads	-	-	(1,599)	(5,145)	(4,531)	(2,585)	-	(13,860)
AFUDC	-	-	(174)	(917)	(2,010)	(2,869)	-	(5,970)
Total Capital	-	-	(8,723)	(28,432)	(26,241)	(16,694)	-	(80,090)
Project Expense	-	-	-	-	-	(1,000)	(10,000)	(11,000)
Total Project Costs	-	-	(8,723)	(28,432)	(26,241)	(17,694)	(10,000)	(91,090)

Recommended Alternative	
NPV in 2012 Dollars	(71,231)
Discount rate sensitivity	(79,157)
Net benefit to cost ratio	(1.00)
Economic benefit/cost	-
Discount rate - standard	9.0%
Discount rate - sensitivity	5.0%

Next Best Alternative	
NPV in 2012 Dollars	-
Net benefit to cost ratio	NA
Economic benefit/cost	NA

CAPITAL PROJECT PROPOSAL
- *Business Case* -

PROJECT SPECIFICS			
14	In Start of Year Budget?	☐ YES	☒ NO
14A	*If "**YES**", please provide the following:*	**Dollar Amount:**	**$ Project was actually forecasted for the FY16-19 budget.**
		In-Service Date:	
15	In Asset Plan?	☒ YES	☐ NO
15A	*If "**YES**", please provide the following:*	**Dollar Amount:**	**$ $88.9M**
		In-Service Date:	9/30/2019
16	Has this Asset been designated "***critical***" in the business unit asset strategy?	☐ YES	☒ NO
17	Is this a stage-gate project?	☒ YES	☐ NO
17A	*If "**YES**", please provide explanation:*	**The capital and expense costs in this Business Case are based on third-party estimates and may change. If the capital costs change significantly then this business case will be reevaluated**	
18	Other requirements/approvals needed for project?	☐ YES	☒ NO
18A	*If "**YES**", please provide explanation:*		

BUSINESS CASE SYNOPSIS	HELP
	This section is an overview of the project proposal. It should be completed after all the other sections in the Business Case have been completed
19	BPA will fund the following capital investments: (1)South Seattle 500/230 kV Transformer Addition Project: BPA will install a new 500/230 kV transformer at the BPA Raver Substation. The plan will also reconfigure Raver and Covington 230kV stations to accommodate the addition with several line re-terminations and bus reconfigurations. This capital investment is $56.2 M. (2) Northern Intertie RAS Improvement Project: BPA will install new communication and logic to expand the Northern Intertie RAS (NI RAS) Scheme, and will consolidate the NI RAS and Bellingham Area Load Trip Scheme (BALTS) into the West Side RAS (WS-RAS) controller. This capital investment is $4 M. (3) BPA will also fund one-third of the Puget Study Team (BPA & Columbia Grid) Recommendation for Puget, Maple Valley to Sno-King Re-conductor (whereas Puget will actually construct their Preferred Plan Projects), as well as one-third of the Seattle City Light Preferred Plan Projects. This cost is $11 M expense. The preferred projects maintain the Northern Intertie capacity in order to fulfill existing entitlement return obligations to Canada as well as load service obligations of the Puget Sound Area utilities. Without these projects, there is a risk that BPA would be unable to fulfill the treaty obligations under the Canadian Entitlement within the Columbia River Treaty. In addition, the preferred plan projects will also help to mitigate Puget Sound area congestion and reduce the risk of curtailments.

CAPITAL PROJECT PROPOSAL
- *Business Case* -

APPROVALS		HELP
20	*Please note that **ALL FIELDS** must be completed below!*	

Asset Accounting Capitalization Review:		Date Approved:
Khatera Mahan, FRP		12/9/2011
This form is completed by:		**Date Submitted:**
Kevlyn Mathews, David Cathcart & Berhanu Tesema		12/15/2011
Name of Project Sponsor/Title:		**Date Approved:**
James Hallar	**Program Manager**	12/19/2011
Project Sponsor	*Title*	
Asset Category Approval/Title:		**Date Approved:**
Hardev Juj	**Transmission Planning VP**	
Approval	*Title*	

NARRATIVE

21	Project Context/Background:	HELP

The Puget Sound Area and Northern Intertie (PSANI) area is located in northwest Washington, is the largest and most dense load center on the BPA system; and includes a complex interconnection with multiple transmission owners/operators. The Northern Intertie path consists of two BPA 500kV Westside circuits, Custer-Ingledow #1 and #2 (Westside Northern Intertie); and two 230kV eastside circuits, Boundary-Nelway and Boundary-Waneta (Eastside Northern Intertie). The references to the Northern Intertie herein are primarily to the Westside Northern Intertie. The largest BPA customers in the area include Puget Sound Energy, Snohomish PUD, Seattle City Light, Tacoma Power Utilities, ALCOA-Intalco, and deliveries to British Columbia Hydro. Including Canadian Entitlement exports (up to 1500MW, allocated 11/14 to the Westside NI), the simultaneous winter peak load in the PSANI area is roughly 10,000MW and is growing at approximately 1.0% per year. The PSANI firm load service obligation is supplemented by local, customer-owned thermal and hydro generation facilities owned by SCL, SNOPUD and PSE. It is also served by Federal Hydro Projects and Eastern Oregon/Washington Wind plants via the West of Cascades North (WOCN) path.

The Puget Sound Area is a highly interconnected and complicated system with varied transmission ownership/operation (PSE, SCL, SPUD, TPU, BPA, BC Hydro). Currently, area congestion is mitigated using complicated operational nomograms for the Northern Intertie path, a PSANI redispatch program, a curtailment calculator that reduces PSANI schedules in and through the area; and congestion mitiagtion tools limited to Northern Intertie users only. Redispatch and curtailment events are usually triggered by outage conditions on one or more of the interconnected PSANI systems, ususally during peak load periods. These mitigation events can be expensive for BPA customers in the area. It may require ramping expensive local thermal generation in order to maintain firm load obligations or acquiring power from sources north of the area. Depending upon the year, there can be up to 15 events in a single year that require some form of OSG Redispatch or NI curtailment.

The need for this project is thus driven primarily by the goal to minimize the number and likelihood of curtailments to firm transmission deliveries in and through the PSANI area and 1) meet firm obligations for Canadian Entitlement Return, and 2) maintain reliable firm load obligations for the greater Puget Sound Area. Columbia Grid facilitated a PSANI Study Team comprising of BPA, PowerEx, PSE, SCL, SPUD and TPU to develop a long term plan to minimize PSANI Curtailment Events. The stated goal of the study team was to develop a project that minimized PSANI firm Curtailments while maintaining Canadian Entitlement return and reliable load service. The metrics used for evaluating the projects were a new Transmission Curtailment Risk Measure (TCRM) and Total Transfer Capability (TTC) on the Northern Intertie, as well as preliminary cost comparisons and project feasibility. TCRM measures the interconnected system performance for outage conditions, and TTC measures performance for standard NERC/WECC all-lines-in-service conditions. These methods are explained in detail in the 2011 Columbia Grid PSAST Recommended Transmission Expansion Plan report.

The 2010 NOS Cluster Study indentified the same PSANI projects to address limitations for the South-to-North transfer direction, because S-N implies return of the Canadian Entitlement. The limitations associated with North-to-South transfers were identified as separate projects. The projects identified in the 2010 NOS also serve to support the PSANI long range (10-20 year) plan of service.

CAPITAL PROJECT PROPOSAL
- *Business Case* -

NARRATIVE

22	**Investment Objectives:**	HELP

A. **PRIMARY Long-Term Outcome:**
(T) Transmission reliability standards

B. **SECONDARY Long-Term Outcome:**
(T) Transmission availability requirements

C. **Please describe investment objectives below:**

The primary objective of this project is to maintain NERC, WECC and BPA Transmission System Reliability criteria for the Puget Sound Area. The proposed project would allow BPA to meet NERC and WECC TPL criteria for planning cases in the 10-year horizon and beyond. Meeting this criteria is important in preserving BPA's strategic objectives of system reliability and regional accountability.

The secondary objective of this project will be to increase transmission availability during outage conditions. Specifically, the projects will reduce the Transmission Reliability Curtailment Measure (TCRM) as defined in the regional Columbia Grid joint Puget Sound Area Study. Minimizing TCRM results in fewer curtailments of load and/or transfers (for BPA, PSE , SCL, and Snohomish PUD) during N-1-X and other critical outage conditions. Fewer curtailments translates to greater overall transmission availability.

The preferred projects maintain the Northern Intertie capacity in order to fulfill existing entitlement return obligation to Canada as well as load service obligations of the Puget Sound Area utilities. Without these projects, there is a risk that BPA would be unable to fulfill the treaty obligations under the Canadian Entitlement within the Columbia River Treaty.

23	**Key Decision Criteria:** (Type up to a maximum of **FIVE (5) entries** for each category)	HELP

Business/Finance:

- The Puget Sound Area experiences period of transmission congestion that may require mitigation to maintain reliable operation of the Puget Sound Area Interconnection, including in some cases, curtailments of firm transmission service.
- Project will reduce the frequency and amount of curtailment to the Canadian Entitlement that impacts the Puget Sound Area
-
-
-

Legal/Regulatory:

- BPA owns and is responsible for the reliable operation of the Federal Columbia River Transmission System (FCTRS)
- The Parties (BPA, Puget, and Seattle City Light) have identified the projects, as described in this case that, when taken as a whole, are expected to preserve the reliable operation of the Puget Sound Area Interconnection
- BPA has an obligation to comply with the Canadian Entitlement Treaty
-
-

Environmental:

NARRATIVE

- BPA's financial contributions under the MOA may trigger the need for analysis of projects under the National Environmental Policy Act.
-
-
-
-

Public Interest:

- Seattle City Light and Puget each own and operate electric systems that are interconnected with the FCRTS in the Puget Sound Area and electric power is delivered within those electric systems, and to or from them by BPA over the FCRTS.
- The representatives from each of the Parties and other entities participated in regional studies to develop a long term plan, and implement a range of physical improvements to improve reliability
-
-
-

BPA's People and Processes:

-
-
-
-
-

Other Factors:

-
-
-
-
-

24	**Describe the proposed investment and the alternatives considered:**	**HELP**

Proposed Investment:

The Proposed Investment is the recommendation of the Puget Sound Area Study Team. The proposal follows the one utility concept and regional solution.

(1) South Seattle 500/230 kV Transformer Addition Project: BPA will install a new 500/230 kV transformer at the BPA Raver Substation. The plan will also reconfigure Raver and Covington 230kV stations to accommodate the addition with several line re-terminations and bus reconfigurations. This will require protection, communication and control upgrades at Covington, Tacoma, Raver and Echo Lake Stations.

(2) Northern Intertie RAS Improvement Project: BPA will install new communication and logic to expand the Northern Intertie RAS (NI RAS) Scheme, and will consolidate the NI RAS and Bellingham Area Load Trip Scheme (BALTS) into the West Side RAS (WS-RAS) controller. BPA will upgrade and replace communications and control equipment and several 500kV sites including Custer, Monroe, Echo Lake, Chief Joe, Intalco, Sno-King, Grand Coulee. This will also require controller and logic reprogramming at Dittmer and Munro Control Center.

NARRATIVE

(3) BPA will fund one-third of the Preferred Plan Project Not Planned for Construction Based on the Construction of the Puget Preferred Plan Projects as well as one-third of the Seattle City Light Preferred Plan Projects.

The preferred projects maintain the Northern Intertie capacity in order to fulfill existing entitlement return obligation to Canada as well as load service obligations of the Puget Sound Area utilities. Without these projects, there is a risk that BPA would be unable to fulfill the treaty obligations under the Canadian Entitlement within the Columbia River Treaty. In addition, the preferred plan projects will also help to mitigate Puget Sound area congestion and reduce the risk of curtailments.

Next best alternative:

Several alternatives were studied and eliminated by the Puget Sound Area Study Team. The Proposed Investment was discussed and agreed upon by all Parties. The next best alternative would be to have BPA pay for the entire cost of the proposed package of PSANI projects, which introduces complexities regarding expense or capital dollar allocations (most of the proposed system upgrades are on non-BPA facilities).

If these complications make the proposed package of PSANI projects not feasible, the next best BPA-only solution is to construct a new BPA 500kV line between Echolake and Monroe. Gross costs for a new Monroe-Echolake line alternative are more than $200M construction costs. This alternative would allow BPA to capitalize all costs, but would yield a relatively small amount in Available Capacity for transmission sales.

Alternatives for the individual parts of the PSANI projects were as follows:

1) The alternative for the Raver 500kV transformer project was to site the transformer at Covington. This requires substantially more cost for some incremental boost in performance, but also increase in overall risks (criticality of Covington station with three large 500/230kV transformers) and decrease in future expansion opportunities (230kV yard at Raver).

2) The alternative for the NI RAS improvements is to only add one additional outage to the existing scheme. This is not preferred due to age of equipment and cost-savings for consolidating upgrade work. Also, the alternative would increase operational complexity with 3 separate protection schemes for the Puget Sound Area operating on isolated (or for the BALTS, non-centralized) controller systems.

3) The alternatives for the Puget Preferred Plan Projects and Seattle Preferred Plan Projects can be found in detail in the Columbia Grid Puget Sound Area Study Team Transmission Expansion Plan report..

Status Quo:

If BPA were not to move forward with the plan of service, there would be more curtailment of transmission in the area, and with load growth, BPA will not be able to meet its entitlement obligation or its load service obligations.

25	**Risks Addressed by this Project:**	**HELP**

NARRATIVE

1. Increased frequency and amount of congestion mitigation measures affecting firm transmission service in and through the PSANI area.

Likelihood: Almost Certain. Implementation of PSANI congestion mitigation tools, including PSANI Curtailments, to continue for conditions that exist on today's (current) system. In 2009 alone, there were 15 events that triggered and average of 143MW of OSG Redispatch or PSANI curtailment. Load growth and more restrictive PSANI generation patterns will only exacerbate this problem.

Consequences:
Regional Accountability: Moderate. The consensus in the Columbia Grid forum of the PSA utilities has been to create a system that allows for more conservative generation and operational patterns than seen historically. Failure to complete this project will have negative impacts on relations with the PSA utilities and customers.

Financial: Moderate. Exact costs are unknown, but it is estimated that the annual cost to BPA for PSANI Curtailment events could up to $1 million per year. Customer costs may be equal to or greater than this value.
==========

2. Reduced reliability of the Puget Sound Area Interconnected systems

Likelihood: Rare to Almost Certain. Severe outage conditions have a 1-in-30 year frequency, while less severe but problematic outages have a once per year frequency.

Consequences:
Legal/Regulatory: Major. NERC fines possible for N-1-1 outages, but not likely.
Reliability: Extreme to Moderate. Load reductions greater than 300MW cannot mitigate severe/rare N-1-1 outages. Load reductions of 100-300 MW mitigate more frequent N-2 and N-2 outages.

Regional Accountability: Moderate. Interruptions to firm service would likely be subject to intense Regional and local public scrutiny due to size and nature of Puget Sound Area load and Canadian Entitlement return obligations to Canada. Local utilities would continue to pressure BPA directly and indirectly to address the reliability concerns.
==========

3. Ability to meet BPA's Columbia River Treaty obligation

Likelihood: Possible. Outage conditions that require PSANI congestion measures may occur several times per year. Under current operational procedures BPA is more likely to meet the Entitlement return obligations during less congested periods, but CER delivery may be at risk during the higher congestion periods requiring PSANI congestion measures.

Consequences:
Legal/Regulatory: Extreme. Failure to meet the entitlement return obligations in full and at all times could result in high level diplomatic discussions between the US and Canadian Entities pursuant to the international treaty. Such an event would likely involve BPA, the U.S. State Department, the DOD/Corps of Engineers, and the Canadian Government entities.

Financial: Major. Short term corrective actions to mitigate the risk could include invoking the PSANI redispatch arrangements and paying PSA utilities to run generation during congestion periods. The cost for these actions would be vary with the market and the discretion of the generation owners to operate the generation units.

NARRATIVE

26	**Financial Analysis:**	**HELP**

Describe the assumptions for capital costs:

The project costs mentioned herein are based on a third party estimating company contracted by the Columbia Grid study team, Quantas Technologies. These estimates were based on underdeveloped project scopes, and at the time, were sufficient as placeholder costs in the relative analysis of the study team. These cost estimates also include a 20% contingency.

The capital costs are based on the cost allocation to BPA of the different preferred projects agreed to by the Parties. The reinforcement projects agreed to by the Parties are as follows:

Preferred Plan of service Projected Project Completion Costs

(A) BPA Preferred Plan Projects (Capital Portion)

1. South Seattle 500 kV Transformer Addition project; Completion 2017; Capital Cost $56.2 M
2. Northern Intertie RAS Improvement Project; Completion 2014; Capital Cost $4 M

(B) Puget Preferred Plan Projects (No cost to BPA)

1. Sammamish to Lakeside to Talbot Rebuild Project; Completion 2017; Capital Cost $45 M
2. Lakeside 230 kV Transformer Addition Project; Completion 2017; Capital Cost $22 M

(C) Seattle Light Preferred Plan Projects (BPA Expense: $5.4 M)

1. Bothell to Sno-King Reconductoring Project; Completion 2017; Capital Cost $2.5 M
2. Broad Street Inductor Project; Completion 2017; Capital Cost $7.3 M
3. North Downtown Inductor Project; Completion 2017; Capital Cost $4.4 M
4. Delridge to Duwamish Reconductoring Project; Completion 2016; Capital Cost $1.9 M

(D) Preferred Plan Project Not Planned for Construction Based On the Construction of the Puget Plan Projects (BPA Expense: $5.3 M)

1. Each Party Acknowledges that the construction of the Puget Preferred Plan Projects negated the need for the construction of the Maple Valley to SnoKing Reconductoring.
Maple Valley to SnoKing Reconductoring Project, Completion 2017, Capital Cost $16.1 M

Cost Allocation:

(A) BPA Preferred Plan Projects: BPA will pay the entire actual capital cost of each Project listed

(B) Seattle City Light Preferred Plan Projects: BPA, Puget, and Seattle City Light will each pay one-third of the total actual capital cost of each Project. BPA portion to be expense.

(C) Puget Preferred Plan Projects: BPA and Seattle City Light will each pay Puget an amount equal to one-third of the adjusted projected capital cost of the Maple Valley to SnoKing Reconductoring Project. The adjusted projected capital cost will be $16.1 M * the Cost Differences in Reconductoring Projects. Cost Differences in Reconductoring Projects = the quotient of the sum of the actual capital costs of the Delridge to Duwamish and Bothell to SnoKing Projects, and the sum of the projected

NARRATIVE

capital costs for the Projects ($4.4 M). BPA portion to be expense, the expense cost is estimated at $5.3 M to BPA.

The allocations identified are based on preliminary planning capital cost projections.

Payments will be made at the completion of individual projects.

The South Seattle Transformer Addition Cost is split between FY14, FY15, FY16, and FY17.

The Northern Intertie RAS Project has its cost in FY13 and FY14.

The expense costs of one-third of the Party projects are placed in the fiscal year of project completion, as the payments will be made at the completion of the individual projects as specified in the MOA.

Describe the assumptions for non-recurring project expense(s):

The funding of the Puget Sound Energy and Seattle City Light Projects will be expense because BPA is not gaining any physical assets from these projects. There is a capacity gain on the path from these projects, but further studies and negotiations are required to determine how much can be allocated to BPA. It is unknown if BPA can claim all of the capacity gain. As such, the sum of funding for PSE and SCL projects totals $10.724 M expense dollars, based on BPA paying a portion of PSE's Maple Valley to Sno-king Reconductoring Project and SCL preferred projects.

Describe the assumptions for incremental benefits:

None

Describe the assumptions for incremental costs:

BPA will own the assets from BPA's Preferred Plan Projects for which it is the sponsor and shall be solely responsible for the operation and maintenance of these assets
South Seattle 500/230 Transformer $56.2 M * 3.30% = $1.85 M
RAS Upgrade $4 M *2.01% = $ 0.0804 M
(percentage provided by typical estimating criteria)

NPV of the recommended alternative:	**$ (71,231) K**
NPV of the next best alternative:	**$ N/A**

Please discuss the NPV results:

NARRATIVE

Discuss the Sensitivity Analysis and Results:

Not completed

27	**Project execution risks and management controls:**	**HELP**

1. Project Scope: The scope of the BPA Preferred Plan Project items (Raver Transformer and NI RAS Improvement) was described in the Puget Study and not fully vetted internally. The scope Raver Transformer and NI RAS Improvement will change, and preliminary BPA estimates indicate that the costs will likely be lower than the Quantas estimates.
Likelihood: 4, Almost Certain. The PRD is currently being reviewed, so it the scope of the Plan of Service will change.
Consequence: Lower Capital Portion: 4, Major $10M - $100M
Expense Portion: 3, Moderate $1M - $10M
Mitigation: Provide better and more developed scope for the BPA Preferred Plan Project items.

2. Not in the Demand Plan, no resources identified: Demand Planning for FY13 has not been completed and so we have no information regarding the availability of resources to complete this work fin the given timeframe. This Project will be added to the list of projects to be Demand Planned for FY13 when that work is completed later in FY12. There is some risk that resources will be unable to be committed and may cause schedules to slip for each project.

Likelihood: 2, Unlikely. This project is highly supported by the region.
Consequence: Capital Portion: 4, Major $10M - $100M
Expense Portion: 3, Moderate $1M - $10M
Mitigation: Transmission will have to re-prioritize other projects in order to accommodate the schedule for this PSANI project.

3. Preliminary Study Estimates: The capital cost assumptions for this project are based upon estimates provided by Quanta. TPW preliminary estimates show Raver Transformer costs could be $35M-$40M, and NI RAS Improvement costs could be $2M-$3M. Actual estimates could be $17M-$23M lower than the Quantas estimates

Likelihood: 4, Likely. When TPW estimates are created, the business case financials will be updated to reflect the estimates.
Consequence: Capital Portion: 4, Major $10M - $100M
Mitigation: TPW is currently processing the Budget Level estimates based on the newly defined project scope.

4. Customer Project: There is a risk that Puget and SCL will not meet their obligations as specified in the MOA agreement, or that the cost of their projects will overrun and BPA will be required to pay more expense dollars than expected.

Likelihood: 2. Unlikely
Consequence: Expense Portion: 4, Major $10M - $100M

5. The Puget Project may run into schedule delays resulting from environmental litigation and land acquisition. This would result in BPA's expense payment being made in a different fiscal year.

CAPITAL PROJECT PROPOSAL
- *Business Case* -

NARRATIVE

Likelihood: 3, Possible
Consequence: Expense Portion: 4, Major $10M - $100M

28	**Recommended Targets & Thresholds for PBVIEWS:**		**HELP**
Measure Description:	**PROGRAM COST**		
Progress Indicators (PI):	**GREEN:**	Total direct capital cost is forecast to be $61 M or less	
	YELLOW:	Total direct capital cost is forecast to be $61 M to $65M	
	RED:	Total direct capital cost is forecast to be greater than $65 M	
End of Project Target:	**GREEN:**	Total direct capital cost is $61 M or less	
	RED:	Total direct capital cost is greater than $65 M	
Measure Owner:	TEP Manager		
Point of Contact:			
Subject Matter Expert:			
PBVIEWS Entry:	TEPO		
Measure Description:	**PROJECT SCHEDULE**		
Progress Indicators (PI):	**GREEN:**	Project is forecast to be in service by FY17	
	YELLOW:	Project is forecast to be in service in FY18	
	RED:	Project is forecast to be in service after FY18	
End of Project Target:	**GREEN:**	Project is placed in service by FY17	
	RED:	Project is placed in service after FY18	
Measure Owner:	TEP Manager		
Point of Contact:			
Subject Matter Expert:			
PBVIEWS Entry:	TEPO		
Measure Description:	**PROJECT / PROGRAM SCOPE OR CAPABILITY**		
Progress Indicators (PI):	**GREEN:**	There are no major scope changes or additional preferred projects	
	YELLOW:	There are minor scope changes but no additional preferred projects	
	RED:	There are many scope changes and changes to preferred projects	
End of Project Target:	**GREEN:**	There are no major scope changes or additional preferred	

NARRATIVE

		projects
	RED:	There are major scope changes and additional (or changes to) preferred projects
Measure Owner:	TEP Manager	
Point of Contact:		
Subject Matter Expert:		
PBVIEWS Entry:	TEPO	
Measure Description:	**OTHER PERFORMANCE MEASURE(S)**	
Progress Indicators (PI):	**GREEN:**	NA
	YELLOW:	NA
	RED:	NA
End of Project Target:	**GREEN:**	NA
	RED:	NA
Measure Owner:	TEP manager	
Point of Contact:		
Subject Matter Expert:		
PBVIEWS Entry:	TEPO	

29 What are the appropriate metrics to judge the success of the investment once it is placed in service? **HELP**

If the stated objectives have been met (stated below) and no thresholds are red:

The primary objective of this project is to maintain NERC, WECC and BPA Transmission System Reliability criteria for the Puget Sound Area. The proposed project would allow BPA to meet NERC and WECC TPL criteria for planning cases in the 10-year horizon and beyond. Meeting this criteria is important in preserving BPA's strategic objectives of system reliability and regional accountability.

The secondary objective of this project will be to increase transmission availability during outage conditions. Specifically, the projects will reduce the Transmission Curtailment Risk Measurement (TCRM) as defined in the regional Columbia Grid joint Puget Sound Area Study. Minimizing TCRM results in fewer curtailments of load and/or transfers (for BPA, PSE and SCL) during N-1-X and other critical outage conditions. Fewer curtailments translates to greater overall transmission availability.

The preferred projects maintain the Northern Intertie capacity in order to fulfill existing entitlement return obligation to Canada as well as load service obligations of the Puget Sound Area utilities. Without these projects, there is a risk that BPA would be unable to fulfill the treaty obligations under the Canadian Entitlement within the Columbia River Treaty.

CAPITAL PROJECT PROPOSAL
- Business Case -

Financial Model and Other Information	HELP

Double click on icon below to open up the EXCEL MODEL workbook:

Financial Model

CAPITAL PROJECT PROPOSAL
- Business Case -

HELP SECTION ON SPECIFIC QUESTIONS	
SECTION C: PROJECT INVESTMENT SUMMARY TABLE	The Project Summary Investment table from the embedded Excel financial model must be copied and pasted into the box provided. The Excel model is embedded in the template in the final section (Financial Model and Other Information): From the "Summary" worksheet of the Excel model, highlight the complete table and click on the "Copy" icon. Switch to the Word template, place your cursor inside the box provided and select Edit, Paste Special, and then choose Picture (Enhanced Metafile). You will need to replace the summary table if the numbers in the Excel model change, so this step is better left until the business case is nearly complete.
Question #19 BUSINESS CASE SYNOPSIS	The business case synopsis should be completed only after the rest of the business case is complete. The synopsis should be brief, but should capture key points from each section of the business case. The synopsis discussion should be organized to follow the order of the template – background, objectives, etc. No new information should be included in the synopsis. If you cut and paste from the rest of the template, be careful to be brief and to focus on just the key points.
Question #20 APPROVALS	All approvals must be complete before the business case is submitted for agency approval. The Asset Accounting review requires that you consult with Asset Accounting to obtain the approval signature. The purpose of the Asset Accounting review is to verify that the project costs are properly classified as either expense or capital. The signature should be from the Asset Accounting representative who performed the review. You should obtain and retain an e-mail or other document from the Asset Accounting representative to support their approval. The final approval (Asset Category Approval) should generally be a vice president. In addition to filling out their name and date on this electronic form, some form of supporting documentation for the approval must be sent to Agency Asset Management. That documentation can be an e-mail from the approver indicating approval, a hard copy signature, PDF signature, or equivalent.

HELP SECTION ON SPECIFIC QUESTIONS	
Question #21 **NARRATIVE** **Project Context/Background**	In general, this section is the problem statement. You should describe the current state and explain how we arrived at the current state. What has (or hasn't) occurred that now requires this investment? This section should include (where appropriate): A description of the facility/equipment/asset that is to be replaced, expanded, reinforced or upgraded. Include location, capability, purpose, etc. The condition of the equipment, including supporting inspection and maintenance information. The requirements or standards that are not being met (or will not be met) by the current equipment.
Question #22 **NARRATIVE** **Investment Objectives**	In this section, you will describe the objectives of the investment. Select the general objectives from the supplied options for A and B. Then describe the specific objectives in section C. Your explanation should: Describe the desired future state – what does this investment need to accomplish? This is not a description of the project; it is a description of the outcome you are trying to achieve. Be specific – comply with NERC standard X, increase capacity by X, improve response time to X, reduce outages by X, serve new customer X, etc.

HELP SECTION ON SPECIFIC QUESTIONS	
Question #23 **NARRATIVE** **Key Decision Criteria**	The key decision criteria are the factors you will use to evaluate the alternatives to meeting your investment's objectives. Here you are identifying which factors will be important to you as you evaluate your alternatives to choose the best solution. You may be unable to identify criteria in each of the categories. The following are some examples: **Business/Finance:** • The solution must be least life cycle cost. • Reliability must increase by at least X. • The solution must be accommodated within the FY XXXX budget. • Capability must increase by at least X. • The rate impact must be less than X. **Legal:** • Contract provision X must be met. • At minimum, the solution must comply with regulation X. **Environmental:** • The solution must produce a minimum flow of X. • The solution should reduce energy consumption. • The solution should have no carbon footprint. • The solution must be consistent with renewable resource goals. **Public Interest:** • The solution must accommodate public input. • The solution must support regional goals for X. **BPA's People and Processes:** • The solution must add no workforce. • The solution must be consistent with BPAM X. • The solution must have executive support. • Implementation must be accomplished with existing workforce.

HELP SECTION ON SPECIFIC QUESTIONS	
Question #24 **NARRATIVE** **Proposed Investment**	Describe the proposed investment or recommended alternative. Be specific: • What is being purchased, constructed or implemented? • Where will the work be performed? • When will the work be completed? • What resources are required to complete the project? • How will the project be conducted? • Explain why the proposed investment meets the key decision criteria better than the other options considered. **Next Best Alternative:** Describe the next best alternative – what would you do if you didn't make the proposed investment? Explain why the next best alternative is not as attractive as the recommended alternative. If any other alternatives were considered, briefly discuss them and why they were rejected. **Status Quo:** Describe the status quo if it was not described as one of the alternatives. The status quo is "business as usual" and isn't necessarily a "do nothing" case. It describes what you will do to get by, or continue to get by, instead of pursuing one of the alternatives.

HELP SECTION ON SPECIFIC QUESTIONS	
Question #25 **NARRATIVE** **Risks Addressed by this Project**	**1. Provide Agency risk management context:** a. Define relationship of project to applicable **Agency** Top Enterprise Risks. b. Define relationship of project to applicable **Agency** strategic objectives. **2. Outline the risks to the Agency if this investment does *not* occur:** **a.** Provide a concise risk statement for each risk identified. **i.** Example: "Risk that *(description of event)* leads to *(description of outcome expressed in terms of impact on the Agency objectives)*" b. For each risk statement, quantify the level of risk in terms of Likelihood (probability of event occurring) and Consequence (impact on the organization). Do not use arbitrary or undefined ratings. Refer to the pre-defined Agency scales if necessary.

HELP SECTION ON SPECIFIC QUESTIONS	
Question #26 **NARRATIVE** **Financial Analysis**	Respond to each of the prompts concerning the financial analysis contained in the embedded financial analysis model. When describing assumptions: Explain how you estimated your capital costs and non-recurring project expenses. What contingency is included in the estimates? Describe the incremental costs and benefits. This information should provide a general understanding of the costs and benefits that are included in the financial analysis model. In the financial analysis model, you will be required to detail the calculation of those costs and benefits. When discussing the NPV results, you may need to explain why the project NPV is negative, or why the recommended alternative may have a less attractive NPV than the next best alternative. A sensitivity analysis is required for projects over $7 million which have key cost/benefit drivers that are highly uncertain. The sensitivity analysis should include a range of assumptions to address the risk around the delivery of the expected value of the project, as measured by NPV or NCR. This should be done for all alternatives, including the status quo. The results should show the NPV of each alternative at the various sensitivity levels. You may use this analysis to support the cost threshold that you will propose in Section 28. Before proceeding with this analysis, consult the ACPRT or your finance subject matter expert to discuss the best approach for this analysis.

HELP SECTION ON SPECIFIC QUESTIONS	
Question #27 **NARRATIVE** **Project Execution Risks and Management Controls**	**1. Describe the Project Execution risks related to this project:** **a.** Provide a concise risk statement for each project execution risk that may impact project performance, cost, and schedule milestones (Example: "Risk that *(description of event)* leads to *(description of outcome expressed in terms of impact on the project objectives or deliverables).*" b. For each risk statement, quantify the level of risk in terms of Likelihood (probability of event occurring) and Consequence (impact on the organization). Do not use arbitrary or undefined ratings. Refer to the pre-defined Agency scales if necessary. Avoid boilerplate language (e.g. "risk that schedule overruns results in project delays"); each risk should be supported by specific and verifiable supporting information. c. For each risk, outline the details of your treatment plan that will reduce the level of risk. The level of information here should follow S.M.A.R.T. principles; information provided should be Specific, Measurable, Actionable, Relevant, and Time-oriented. d. If management is willing to accept all (or a portion of) the risks identified, supporting rationale should be provided.

HELP SECTION ON SPECIFIC QUESTIONS	
Question #28 **NARRATIVE** **Recommended Targets & Thresholds for PBVIEWS:**	In this section, you will propose targets and thresholds for cost, schedule and scope. There is a fourth field available (Other Performance Measure) for an additional target, if appropriate. The targets should be focused on the project-end state: total direct capital costs, final in-service date and complete delivered scope. The thresholds you propose, above the direct capital costs and expected in-service date in your business case, should be based on some level of thought or analysis regarding the uncertainty in your project. What, in particular, is uncertain and what does that mean for cost, schedule and scope? The following example is a typical set of targets for cost, schedule and scope. There are many actual examples available on the Agency Asset Management SharePoint site. You can access those by browsing the approved projects folders and looking at the ACPRT or CAB decision documents. ***PROJECT COSTS:*** Program Indicators: Green: Total direct capital cost is forecast to be $8.0 million or less. Yellow: Total direct capital cost is forecast to be between $8.0 million and $8.9 million. Red: Total direct capital cost is forecast to be greater than $8.9 million. End of Project Target: Green: Total direct capital cost is $8.9 million or less. Red: Total direct capital cost is greater than $8.9 million. ***PROJECT SCHEDULE:*** Project Indicators: Green: Project is forecast to be placed in service by 6/30/2014. Yellow: Project is forecast to be placed in service between 6/30/2014 and 8/31/2014. Red: Project is forecast to be placed in service after 8/31/2014. End of Project Target: Green: Project is placed in service by 8/31/2014. Red: Project is placed in service after 8/31/2014. ***PROJECT/PROGRAM SCOPE OR CAPABILITY:*** Program Indicators: Green: Component replacements are forecast to be completed at all of the 20 sites identified. Yellow: Component replacements are forecast to be completed at between 19 and 20 sites. Red: Component replacements are forecast to be completed at less than 19 sites. End of Project Target: Green: Component replacements are completed for at least 19 of the sites identified. Red: Component replacements are completed for less than 19 of the sites identified.

HELP SECTION ON SPECIFIC QUESTIONS	
Question #29 NARRATIVE **What are the appropriate metrics to judge the success of the investment once it is placed in service?**	Describe the metrics that you would use to measure the project's success, once it has been implemented. These metrics should be specific and measurable, wherever possible. Provide the baseline (pre-implementation) measurement for those metrics and the expected performance for those metrics following project implementation. Examples of metrics would include: capacity is X and is expected to be Y, response time is X and is targeted to be Y, outage minutes are X and will improve to Y, customer satisfaction levels are X and are expected to move to Y, etc. You may have already touched on these metrics in the objectives discussion in section 22. It's possible that the metrics are not clearly identified at this point in the project's development. In those cases, provide a commitment as to when the project metrics and current baseline measurements will be provided to the ACPRT.
Financial Model and Other Information	The Excel model that supports the business case must always be saved in the dedicated spot that it occupied when the template was delivered to you. The remaining area in this section may be used to attach additional information that supports the business case: • Limit attachments to information that is clearly relevant to the business case: maps, project timelines, cost detail, etc. • Relevant and focused excerpts from documents are more useful than entire documents. • You may also note and describe a document that is available, but not attached if the information in that document has a more general relation to the project, but not being specifically referenced. • If you attach entire documents select Insert/Object/Create from File and check the "Display as Icon" box. You may rename your attached file to a more meaningful name by clicking on the "Change Icon" button.

From:	Marleau,Michael L (BPA) - TEP-TPP-1
To:	Dorf, Angela; Wilson,Jenny (BPA) - TPP-OPP-3; tashburn@bpa.gov; Cathcart,David A (BPA) - TPP-OPP-3; Tesema,Berhanu K (BPA) - TPP-OPP-3; Jusupovic,Jana D (BPA) - TPC-TPP-4; Timberman,Toni L (BPA) - TSE-TPP-2; Siddiqi, Uzma (Uzma.Siddiqi@seattle.gov); Ambrose, Philip (Philip.Ambrose@seattle.gov); bob.risch@seattle.gov; Tyson,Ivy L (BPA) - TPS-TPP-1
Subject:	RE: PSANI Bothell-SnoKing Project (meeting room TPP154)
Date:	Friday, November 08, 2013 8:35:00 AM
Attachments:	BPA-SCL Interconnection.pdf

Update:

Agenda:

1. **Line Rating:** BPA is planning to use at least 2200A @ -5deg. C so we will definitely be rebuilding our portion of the SnoKing-Bothell Lines 1 & 2. We will develop estimates based on a rebuild with conventional conductor.

2. **Interconnection Point:** The proposed interconnection point would have the line owner terminate the line to the structure. See attachment.

3. **Relaying:** 230kV Snoking – Bothell No. 1 line has KD/IRD-9 electromechanical relays on it, along with RFL-9745 and some Remedial Action System (RAS) equipment. If we are going to have fiber communications to Bothell it would be nice to upgrade the relays to SEL-411L line current differential relays as part of the line bebuild.

PHONE BRIDGE INFO FOR PARTICIPANTS:

To call into the bridge dial ext. 8001 (360-418-8001), and at any time during or after the message and the double beep, enter 6053 #.

The system will not allow access into the bridge until 5 minutes before the start time of your conference.

Callers can mute or un-mute their lines by pressing *6. If you will not be speaking, please mute your line to minimize noise on the bridge.

Participants should not place this call on hold; doing so will cause other participants to hear their hold music.

If you need assistance dialing into the bridge, have questions or problems, or need to cancel this bridge, please contact the BPA Phone office at x8888 (360-418-8888) or x5050 (503-230-5050).

DESIGNATION OF TYPICAL OWNERSHIP OF EQUIPMENT & HARDWARE USED IN THIS AGREEMENT

1. UTILITY "A" OWNS THE TRANSMISSION LINE STRUCTURE.
2. UTILITY "A" OWNS THE TRANSMISSION LINE CONDUCTOR ON ONE SIDE OF THE STRUCTURE AND UTILITY "B" OWNS THE TRANSMISSION LINE CONDUCTOR ON THE OTHER SIDE OF THE STRUCTURE.
3. UTILITY "A" OWNS THE INSULATORS AND ASSOCIATED CONNECTING HARDWARE IN THE CENTER AND ON THE RIGHT SIDE OF THE STRUCTURE.
4. UTILITY "A" OWNS THE JUMPERS (CONDUCTOR) BETWEEN BOTH THE CENTER AND THE RIGHT INSULATORS AND BETWEEN THE CENTER AND LEFT INSULATORS.
5. UTILITY "B" OWNS THE INSULATORS AND ASSOCIATED CONNECTING HARDWARE ON THE LEFT SIDE OF THE STRUCTURE.
6. UTILITY "A" EQUIPMENT / HARDWARE IS SHOWN WITH SOLID LINES AND UTILITY "B" EQUIPMENT / HARDWARE IS SHOWN WITH DASHED LINES.

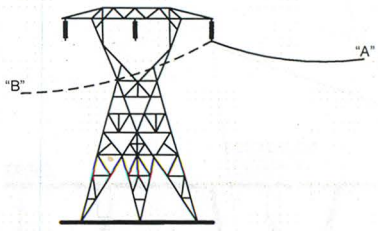

UTILITY "A"
STRUCTURE
("IN-LINE" VIEW)

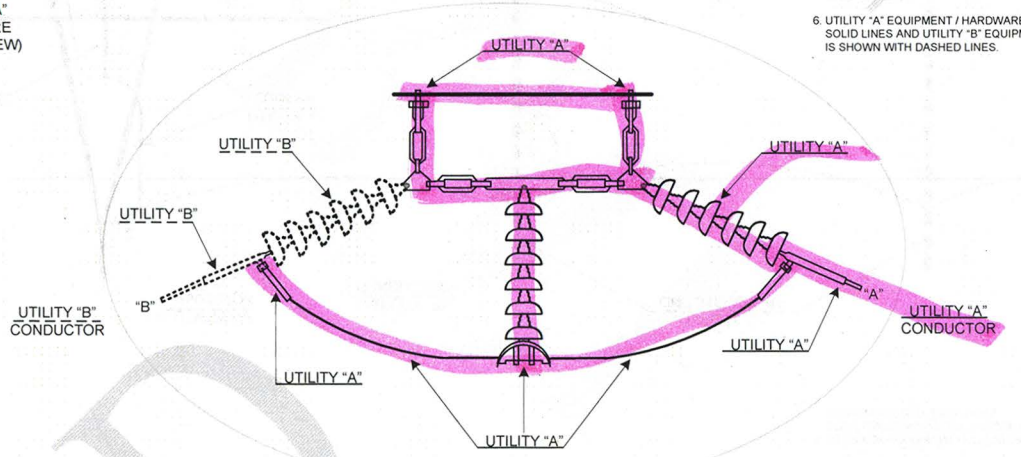

ROTATED VIEW OF ONE CONDUCTOR
FROM SIDE OF TRANSMISSION LINE STRUCTURE

TYPICAL DEAD-END STRUCTURE HARDWARE OWNERSHIP

ORIGINAL CONCEPT DRAWING DERIVED FROM BPA STANDARDS DOCUMENTS

BONNEVILLE POWER ADMINISTRATION

INTERCONNECTED TRANSMISSION SYSTEMS AGREEMENT

SEATTLE CITY LIGHT

EXHIBIT B
DIAGRAMS

TABLE3
TYPICAL DEADEND STRUCTURE EQUIPMENT AND HARDWARE OWNERSHIP

From:	Dorf, Angela
To:	Siddiqi, Uzma (Uzma.Siddiqi@seattle.gov); Ambrose, Philip (Philip.Ambrose@seattle.gov); bob.risch@seattle.gov; Tyson,Ivy L (BPA) - TPS-TPP-1; Gentry,Natasha A (BPA) - TELC-TPP-3; Cathcart,David A (BPA) - TPP-OPP-3; Tesema,Berhanu K (BPA) - TPP-OPP-3; Wilson,Jenny (BPA) - TPP-OPP-3; Ashburn,Tyler (BPA) - TELC-TPP-3; Timberman,Toni L (BPA) - TSE-TPP-2; Jusupovic,Jana D (BPA) - TPC-TPP-4
Cc:	Marleau,Michael L (BPA) - TEP-TPP-1
Subject:	Bothell-SnoKing Meeting Notes
Date:	Tuesday, November 12, 2013 12:50:09 PM
Attachments:	11-08-13 SnoKing Meeting Notes.pdf

Attached please find meeting notes from our meeting last week.

ANGELA DORF, PLS

HDR, Inc.
Project Manager

1001 SW 5th Ave. STE 1900 | Portland, OR 97204
503.727-3945 | c: 760.641.1551
angela.dorf@hdrinc.com | hdrengineering.com
Follow Us – Facebook | Twitter | YouTube

SnoKing Project

Transmission Line Meeting Notes

November 8, 2013 @ 9:00AM

Attendees:

Name:	Organization	Role	Contact Info:
BPA Team			
Mike Marleau	BPA	Project Manager	mlmarleau@bpa.gov
Angela Dorf	HDR	Assistant Project Manager	angela.dorf@hdrinc.com
Natasha Gentry	BPA	Supervisory Civil Engineer – Transmission Line Design	nagentry@bpa.gov
Tyler Ashburn	BPA	Transmission Line Civil Engineer	txashburn@bpa.gov
Toni Timberman	BPA	Customer Account Executive	tltimberman@bpa.gov
Jana Jusupovic	BPA	Customer Service Engineering	jdjusupovic@bpa.gov
Jenny Wilson	BPA	Coordinating Engineer	jlwilson@bpa.gov
Dave Cathcart	BPA	Planning Engineer	dacathcart@bpa.gov
Berhanu Tesema	BPA	Transmission Planner	bktesema@bpa.gov
Uzma Siddiqi	Seattle City Light (SCL)	Principal Systems Engineer	Uzma.siddiqi@seattle.gov
Philip Ambrose	Seattle City Light (SCL)	Sr. Project Manager	Philip.ambrose@seattle.gov
Bob Risch	Seattle City Light (SCL)	Transmission Engineer	Bob risch@seattle.gov

- SnoKing-Bothell No.1 & No.2 230kV Lines
  - BPA is considering rebuilding their portion of the line so that future needs can be met without rebuilding the line at a later date. SCL was concerned about the possible cost of a rebuild, if that cost was a shared cost.
  - Dave used WECC study cases and the Columbia Grid Report to rate the lines for future needs, which will likely require BPA to rebuild for higher than a 1900A rating (likely +2500A). The Columbia Grid report suggests a range for the line ratings roughly between 1850A and 3000A.
  - SCL stated they are aiming for 1800A-1900A for their portion of the line, using high temperature, low sag conductor.
  - BPA relayed to SCL why we are unwilling to place high temperature, low sag conductors on our line. BPA sited sources from EPRI reports on why this conductor type is not reliable. BPA will send something in writing to SCL showing a summary of our findings.
  - Before BPA makes a decision on the line size, estimates will be prepared for a reconductor and a rebuild project. Internal team will meet in a month's time to review the estimates and make a determination.

SnoKing Project

Transmission Line Meeting Notes

- Action item list:
  - Tyler (BPA) will send SCL an informal summary analysis of high temperature, low sag conductors.
  - BPA will prepare cost estimates for both a line rebuild and a reconductor option of BPA-owned lines to determine which scenario is the most cost-effective at this time.
  - Dave will send SCL WECC cases that he used to come up with future requirements.
  - Angela will schedule a BPA internal meeting to review the cost estimates in four weeks time.

From:	Marleau,Michael L (BPA) - TEP-TPP-1
To:	"Siddiqi, Uzma"; Ambrose, Philip; Bob.Risch@seattle.gov
Cc:	Timberman,Toni L (BPA) - TSE-TPP-2; Ashburn,Tyler (BPA) - TELC-TPP-3; Dorf, Angela; Tyson,Ivy L (BPA) - TPS-TPP-1; Gentry,Natasha A (BPA) - TELC-TPP-3
Subject:	FW: Bothell - Sno King HTLS Conductor
Date:	Thursday, November 14, 2013 11:37:38 AM

Uzma, Philip, and Bob,

Below is BPA's summary position on the use of HTLS conductor on our system. While we are not licensed to share the EPRI reports, Tyler referenced the ones used to form our basis.

Please let me know if you have any questions.

Thanks,

Mike

Michael L. Marleau

Senior Project Manager - TEP

Office Phone: (360) 619-6053

email: mlmarleau@bpa.gov

From: Ashburn,Tyler (BPA) - TELC-TPP-3
Sent: Thursday, November 14, 2013 10:41 AM
To: Marleau,Michael L (BPA) - TEP-TPP-1; Cathcart,David A (BPA) - TPP-OPP-3; Tesema,Berhanu K (BPA) - TPP-OPP-3; Wilson,Jenny (BPA) - TPP-OPP-3; Dorf, Angela
Cc: Gentry,Natasha A (BPA) - TELC-TPP-3; Custer,Leonard L (BPA) - TELC-TPP-3; Havel,Jennifer L (BPA) - TELC-TPP-3; Staats,Michael L (BPA) - TEL-TPP-3
Subject: Bothell - Sno King HTLS Conductor

Bothell - Sno King folks,

(Mike please forward to the SCL team, I don't have them in my directory, also anyone else you deem appropriate)

In our last meeting I was asked to provide a justification of BPA's choice not to install HTLS conductors. I'll start with a bit on my background in the field of HTLS conductors. I'm currently the chair of EPRI's Increased Transmission Capacity (ITC) Task Force. This is a consortium of 30 funding utilities that focuses on three areas:

1. HTLS Conductor & Connector Systems

2. High Temperature Operation of Conventional Conductor

3. Line Rating Methodologies & Dynamic Line Rating

In addition to the work in this task force I've been involved heavily in two separate EPRI Projects. One is a lab test of various types of HTLS conductors that is coming to completion in the next six months and the other is a field trial project currently underway in Ottawa, ON, testing several HTLS conductors as part of a functioning electrical grid.

From my work on these projects, I cannot recommend BPA use HTLS conductor for this upgrade project. Please see the reasons detailed below:

Standards: Typically, BPA purchases conductor manufactured to ASTM standards. Published standards do not yet exist for HTLS conductors (core or stranded conductor) or the compression fittings. The ANSI C119.7 group has yet to even agree how to judge these connectors because the temperature rise required to age them similarly to ACSR connectors fundamentally alters the material properties of the carbon/composite cores. Approved industry standards are essential for maintaining product consistency, quality, and to ensure you know what it is that you're ordering.

Handling/Live Work: BPA's system currently consists of typical ACSR and AAC conductors. One way HTLS conductors vary from these conductors is in the annealing of the aluminum strands. Because the annealed strands are significantly softer and weaker than un-annealed strands they require different tools and techniques for installation and maintenance to prevent damaging the strands. Additionally, special care must be taken for live work at elevated temperatures. Hot sticks and other live working tools are not designed for temperatures above 100 deg C and can be damaged by these higher temperatures. In order to successfully install and maintain a line with HTLS conductor, new tools would be required and our field crews would have to be trained in the proper methods. This amount of startup cost isn't feasible for ~1 mile of line.

Radial Temperature Profile: In the utility industry, conductor temperature is calculated as the temperature at the surface of the conductor due to electrical load and ambient conditions. Conductors sag characteristics are determined predominantly by the temperature at the core of the conductor. When operated at normal temperatures <100 deg C the difference between the two is nominal (~5 deg C) and is largely ignored. When operating at elevated temperatures the difference in temperature between the core and surface grows significantly (up to 25-30 deg C) and can no longer be ignored. There is currently no proven methodology to determine the core temperature of a conductor, further research is needed in this area.

Mechanical Loading: Currently on BPA's system, maximum sag for all conductors is at the maximum rated temperature. Because of the extremely low coefficient of thermal expansion of HTLS conductors, sag is no longer controlled at maximum temperature, instead maximum sag will occur at maximum mechanical (ice) loading. This is problematic for several reasons, including clearance validation and mapping issues.

Cost: HTLS conductors are considerably more expensive than ASCR conductors. 3M's ACCR conductor, in particular, runs approximately 7x the price of ACSR. Obviously much of this cost is mitigated through savings achieved by not rebuilding towers, but fails to incorporate the cost of extra stock required for any maintenance replacement that is required. An HTLS conductor system would be "special," so new stocking, cataloging, and training would be required. Some acceptance testing would be required, with specifications and Standards development, prior to purchasing. New maintenance tools, products, practices and standards would also be required.

Material Availability: Because HTLS conductor has not been standardized (ASTMs) and so little is currently installed in North America, it is not available on an as needed basis and must be pre-ordered with a significant lead time. This would require a large stockpile of materials to be held in case of emergency. It would be inefficient to maintain such a stockpile for a conductor at only one place on

the system.

These opinions included information from the following EPRI reports:

EPRI 1017448 - Demonstration of Advanced Conductors for Overhead Transmission Lines

EPRI 1024161 - Guide for Selection and Application of High-Temperature Conductors

EPRI 1024140 - Live Work on High Temperature Conductors

EPRI 1024153 - Radial Temperature Gradients of Overhead Transmission Conductors

EPRI 1024160 - Accelerated Aging Test of High-Temperature Conductor and Connectors

Please feel free to contact me with any questions.

-Tyler

H. Tyler Ashburn

Bonneville Power Administration

TELC-TPP-3

(360) 619-6197

From:	Jusupovic,Jana D (BPA) - TPC-TPP-4
To:	Timberman,Toni L (BPA) - TSE-TPP-2
Subject:	Accepted: PSANI MOA Discussion

Toni, can we meet before hand to discuss what we should discuss and bring to the meeting on the 6th, I'll set something up.
PS
Thank you for the invite.

From: Timberman,Toni L (BPA) - TSE-TPP-2
To: Jusupovic,Jana D (BPA) - TPC-TPP-4
Subject: RE: PSANI MOA Discussion
Date: Thursday, November 21, 2013 2:58:00 PM

Still waiting for confirmation from Puget and Seattle, but I have my fingers crossed.

-----Original Appointment-----
From: Jusupovic,Jana D (BPA) - TPC-TPP-4
Sent: Thursday, November 21, 2013 2:07 PM
To: Timberman,Toni L (BPA) - TSE-TPP-2
Subject: Accepted: PSANI MOA Discussion
When: Friday, December 06, 2013 1:00 PM-3:00 PM (UTC-08:00) Pacific Time (US & Canada).
Where: TBD - likely Columbia Grid

Toni, can we meet before hand to discuss what we should discuss and bring to the meeting on the 6th, I'll set something up.

PS

Thank you for the invite.

From: Timberman,Toni L (BPA) - TSE-TPP-2
To: "Phillips, John M - Transmission"
Subject: RE: PSANI MOA discussion
Date: Thursday, November 21, 2013 4:00:00 PM

Ok – will meet you there at 1:00. Still waiting for confirmation from Uzma.

From: Phillips, John M - Transmission [mailto:john.phillips@pse.com]
Sent: Thursday, November 21, 2013 3:34 PM
To: Timberman,Toni L (BPA) - TSE-TPP-2; 'Siddiqi, Uzma'
Cc: Jusupovic,Jana D (BPA) - TPC-TPP-4
Subject: RE: PSANI MOA discussion

ColumbiaGrid would be best.

John Phillips
Manager of Transmission Contracts
Electric Transmission
Location: 355 110 Ave NE, Bellevue WA
Phone: (425) 462-3579

From: Timberman,Toni L (BPA) - TSE-TPP-2 [mailto:tltimberman@bpa.gov]
Sent: Thursday, November 21, 2013 1:59 PM
To: Phillips, John M - Transmission; 'Siddiqi, Uzma'
Cc: Jusupovic,Jana D (BPA) - TPC-TPP-4
Subject: RE: PSANI MOA discussion

Would it be possible to meet starting at 1:00? I have another commitment at 3:00.
Jana and I could come over to Columbia Grid or to the PDX Conf Center.

From: Phillips, John M - Transmission [mailto:john.phillips@pse.com]
Sent: Thursday, November 21, 2013 1:55 PM
To: 'Siddiqi, Uzma'; Timberman,Toni L (BPA) - TSE-TPP-2
Cc: Jusupovic,Jana D (BPA) - TPC-TPP-4
Subject: RE: PSANI MOA discussion

I will be down at ColumbiaGrid on the 6th. I think we will be available after lunch.

John Phillips
Manager of Transmission Contracts
Electric Transmission
Location: 355 110 Ave NE, Bellevue WA
Phone: (425) 462-3579

From: Siddiqi, Uzma [mailto:Uzma.Siddiqi@seattle.gov]
Sent: Wednesday, November 20, 2013 1:53 PM
To: Timberman,Toni L (BPA) - TSE-TPP-2; Phillips, John M - Transmission
Cc: Jusupovic,Jana D (BPA) - TPC-TPP-4
Subject: RE: PSANI MOA discussion

Dec 5-6, I believe will be approved.
Uzma

From: Timberman,Toni L (BPA) - TSE-TPP-2 [tltimberman@bpa.gov]
Sent: Wednesday, November 20, 2013 1:52 PM
To: Siddiqi, Uzma; 'john.phillips@pse.com'
Cc: Jusupovic,Jana D (BPA) - TPC-TPP-4
Subject: PSANI MOA discussion

Hi Uzma and John,
Are you going to be down here for a Columbia Grid or other meeting before the end of the year? I would like to get together to discuss the PSANI MOA.
Thanks,
Toni

From: Timberman,Toni L (BPA) - TSE-TPP-2
To: Jusupovic,Jana D (BPA) - TPC-TPP-4
Subject: Accepted: Prep For PSANI MOA Discussion on Friday (12/6)

From: Timberman,Toni L (BPA) - TSE-TPP-2
To: "Siddiqi, Uzma"
Subject: RE: PSANI MOA Discussion
Date: Monday, December 02, 2013 1:50:00 PM

Makes sense. I will see you the following Thursday, on Dec. 12.

From: Siddiqi, Uzma [mailto:Uzma.Siddiqi@seattle.gov]
Sent: Monday, December 02, 2013 1:49 PM
To: Timberman,Toni L (BPA) - TSE-TPP-2
Subject: RE: PSANI MOA Discussion

Aww shucks…

I felt Tuan was a better match given the level of the folks from PSE and BPA--more management focused than engineering focused. He will be there for the same meeting John Phillips is attending so it worked well for him.

From: Timberman,Toni L (BPA) - TSE-TPP-2 [mailto:tltimberman@bpa.gov]
Sent: Monday, December 02, 2013 1:32 PM
To: Siddiqi, Uzma
Subject: RE: PSANI MOA Discussion

Won't be as much fun without you there!

From: Siddiqi, Uzma [mailto:Uzma.Siddiqi@seattle.gov]
Sent: Monday, December 02, 2013 1:30 PM
To: Timberman,Toni L (BPA) - TSE-TPP-2
Subject: RE: PSANI MOA Discussion

Instead of me.

From: Timberman,Toni L (BPA) - TSE-TPP-2 [mailto:tltimberman@bpa.gov]
Sent: Monday, December 02, 2013 1:29 PM
To: Siddiqi, Uzma
Subject: RE: PSANI MOA Discussion

Ok – is he attending rather than you, or also?

From: Siddiqi, Uzma [mailto:Uzma.Siddiqi@seattle.gov]
Sent: Monday, December 02, 2013 1:28 PM
To: Timberman,Toni L (BPA) - TSE-TPP-2; Jusupovic,Jana D (BPA) - TPC-TPP-4; 'john.phillips@pse.com'
Cc: Tran, Tuan
Subject: RE: PSANI MOA Discussion

Update: Tuan Tran will be attending for SCL.
Uzma

-----Original Appointment-----
From: Timberman,Toni L (BPA) - TSE-TPP-2 [mailto:tltimberman@bpa.gov]

Sent: Monday, December 02, 2013 12:51 PM
To: Jusupovic,Jana D (BPA) - TPC-TPP-4; Siddiqi, Uzma; 'john.phillips@pse.com'
Subject: PSANI MOA Discussion
When: Friday, December 06, 2013 1:00 PM-3:00 PM (GMT-08:00) Pacific Time (US & Canada).
Where: Columbia Grid

From: Timberman,Toni L (BPA) - TSE-TPP-2
To: Marleau,Michael L (BPA) - TEP-TPP-1
Subject: RE: Bothell-SnoKing
Date: Wednesday, December 04, 2013 10:45:00 AM

---

ok – thanks. We are trying to decide how to allocate that cost within the agreement. I will need to get permission from Hardev on how to treat the cost, so the sooner we have that information the better.

Another question –

(b) (5) [redacted]

From: Marleau,Michael L (BPA) - TEP-TPP-1
Sent: Wednesday, December 04, 2013 10:21 AM
To: Timberman,Toni L (BPA) - TSE-TPP-2
Cc: Jusupovic,Jana D (BPA) - TPC-TPP-4; Dorf, Angela
Subject: RE: Bothell-SnoKing

Toni, we're still trying to determine the order of magnitude difference in cost. To me, it makes sense to re-build but I'll wait until we get the costs to formalize a decision. I'm hoping to have that information by late next week.

Thanks,
Mike

From: Timberman,Toni L (BPA) - TSE-TPP-2
Sent: Wednesday, December 04, 2013 9:43 AM
To: Marleau,Michael L (BPA) - TEP-TPP-1
Cc: Jusupovic,Jana D (BPA) - TPC-TPP-4
Subject: Bothell-SnoKing

Hi Mike,
Has a decision been made whether BPA will reconductor or re-build our portion of the Bothell-SnoKing line?
Thanks,
Toni

From: Jusupovic,Jana D (BPA) - TPC-TPP-4
To: Timberman,Toni L (BPA) - TSE-TPP-2
Subject: RE: Urgent question on PSANI MOA
Date: Thursday, December 05, 2013 9:36:42 AM

Good to know...Thank you.

-----Original Message-----
From: Timberman,Toni L (BPA) - TSE-TPP-2
Sent: Thursday, December 05, 2013 9:36 AM
To: Jusupovic,Jana D (BPA) - TPC-TPP-4
Subject: FW: Urgent question on PSANI MOA
Importance: High

-----Original Message-----
From: Redenbo,Alaina D (BPA) - TP-DITT-2
Sent: Wednesday, December 04, 2013 8:27 PM
To: Timberman,Toni L (BPA) - TSE-TPP-2
Cc: Juj,Hardev S (BPA) - TP-DITT-2; Hallar Jr,James J (BPA) - TPO-MODD; Rowe,Pilar R (BPA) - TPW-TPP-4; Hamilton,Jessica K (BPA) - TPWP-MODW; Bekkedahl,Larry N (BPA) - T-DITT2
Subject: Re: Urgent question on PSANI MOA
Importance: High

Toni,

After giving this more thought, I'm sorry but I gave some bad advice.

We must go through the approval process and not make this an exception. Per your justification, I don't believe it will take that long to get the approval once we get the estimates as we can do an evote if needed. We will take it to the TAMC as a scope change. As a result, please do not sign any agreements until the change has been officially approved.

I'm assuming you can let them know that we generally support the change, but need to take it through the official approval process.

Again I am very sorry for my change in getting it approved, but we must follow the policy. Please let me know if you have any questions.

Thanks,
Alaina Redenbo

From: Timberman,Toni L (BPA) - TSE-TPP-2
Sent: Friday, December 06, 2013 8:56 AM
To: 'Phillips, John M - Transmission'; Jusupovic,Jana D (BPA) - TPC-TPP-4;
'Uzma Siddiqi (uzma.siddiqi@seattle.gov)'
Cc: 'Tuan Tran'
Subject:RE: PSANI MOA Discussion

No problem, John. I suspected that we might need to reschedule due to the weather.
I will be at Seattle's offices Thursday morning – maybe we can set up a time that day and have Jana call in.

From: Phillips, John M - Transmission [mailto:john.phillips@pse.com]
Sent: Friday, December 06, 2013 8:53 AM
To: Timberman,Toni L (BPA) - TSE-TPP-2; Jusupovic,Jana D (BPA) - TPC-TPP-4; 'Uzma Siddiqi (uzma.siddiqi@seattle.gov)'
Cc: Tuan Tran
Subject: RE: PSANI MOA Discussion

Hi Toni,
Tuan has some traveling this afternoon and is concerned with the weather and would like to reschedule our 1:00 meeting. Maybe we could meet next Thursday when you are in Seattle.
Thanks,
John

_____

From: Timberman,Toni L (BPA) - TSE-TPP-2 [mailto:tltimberman@bpa.gov]
Sent: Monday, December 02, 2013 12:51 PM
To: Timberman,Toni L (BPA) - TSE-TPP-2; Jusupovic,Jana D (BPA) - TPC-TPP-4; 'Uzma Siddiqi (uzma.siddiqi@seattle.gov)'; Phillips, John M -
Transmission
Subject: PSANI MOA Discussion
When: Friday, December 06, 2013 1:00 PM-3:00 PM (GMT-08:00) Pacific Time (US & Canada).
Where: Columbia Grid

From:	Timberman,Toni L (BPA) - TSE-TPP-2
To:	Jusupovic,Jana D (BPA) - TPC-TPP-4; "Uzma Siddiqi (uzma.siddiqi@seattle.gov)"; "john.phillips@pse.com"; "Tuan H. Tran (tuan.tran@Seattle.gov)"
Subject:	Canceled: PSANI MOA Discussion
Importance:	High

12/6 – Due to weather conditions this meeting is cancelled and will be rescheduled for a future date.

From: Timberman,Toni L (BPA) - TSE-TPP-2
To: Jusupovic,Jana D (BPA) - TPC-TPP-4
Subject: Fw: PSANI MOA Discussion
Date: Monday, December 09, 2013 8:17:57 AM

Jana, could you please help me answer this? I know you did the Business case, but do you have another role too?

From: Siddiqi, Uzma [mailto:Uzma.Siddiqi@seattle.gov]
Sent: Friday, December 06, 2013 06:09 PM Pacific Standard Time
To: Phillips, John M - Transmission <john.phillips@pse.com>; Timberman,Toni L (BPA) - TSE-TPP-2; Jusupovic,Jana D (BPA) - TPC-TPP-4; Tran, Tuan <Tuan.Tran@seattle.gov>
Subject: RE: PSANI MOA Discussion

Toni,
Can you remind me of Jana's role in the PSANI projects?
Thanks,
Uzma

From: Phillips, John M - Transmission [mailto:john.phillips@pse.com]
Sent: Friday, December 06, 2013 8:53 AM
To: 'Timberman,Toni L (BPA) - TSE-TPP-2'; Jusupovic,Jana D (BPA) - TPC-TPP-4; Siddiqi, Uzma
Cc: Tran, Tuan
Subject: RE: PSANI MOA Discussion

Hi Toni,
Tuan has some traveling this afternoon and is concerned with the weather and would like to reschedule our 1:00 meeting. Maybe we could meet next Thursday when you are in Seattle.
Thanks,
John

---

an,Toni L (BPA) - TSE-TPP-2 [mailto:tltimberman@bpa.gov]
)ecember 02, 2013 12:51 PM
,Toni L (BPA) - TSE-TPP-2; Jusupovic,Jana D (BPA) - TPC-TPP-4; 'Uzma Siddiqi (uzma.siddiqi@seattle.gov)'; Phillips, John M - Transmission
NI MOA Discussion
ecember 06, 2013 1:00 PM-3:00 PM (GMT-08:00) Pacific Time (US & Canada).
a Grid

From: Jusupovic,Jana D (BPA) - TPC-TPP-4
Sent: Monday, December 09, 2013 9:29 AM
To: Timberman,Toni L (BPA) - TSE-TPP-2
Subject:RE: PSANI MOA Discussion

I wasn't sure if you wanted me to answer it or you…so I took a risk :)

From: Timberman,Toni L (BPA) - TSE-TPP-2
Sent: Monday, December 09, 2013 9:29 AM
To: Jusupovic,Jana D (BPA) - TPC-TPP-4
Subject: Re: PSANI MOA Discussion

Thanks, Jana!

From: Jusupovic,Jana D (BPA) - TPC-TPP-4
Sent: Monday, December 09, 2013 09:26 AM Pacific Standard Time
To: Siddiqi, Uzma <Uzma.Siddiqi@seattle.gov>; Phillips, John M - Transmission <john.phillips@pse.com>; Timberman,Toni L (BPA) - TSE-TPP-2; Tran, Tuan <Tuan.Tran@seattle.gov>
Subject: RE: PSANI MOA Discussion

Morning Uzma,
My role in Customer Service Engineering is "Team Lead for all Customer driven work."
I make sure the funding is available and contracts are in place for all customer driven projects.

I hope that answers your question.

From: Siddiqi, Uzma [mailto:Uzma.Siddiqi@seattle.gov]
Sent: Friday, December 06, 2013 6:10 PM
To: Phillips, John M - Transmission; Timberman,Toni L (BPA) - TSE-TPP-2; Jusupovic,Jana D (BPA) - TPC-TPP-4; Tran, Tuan
Subject: RE: PSANI MOA Discussion

Toni,
Can you remind me of Jana's role in the PSANI projects?
Thanks,
Uzma

From: Phillips, John M - Transmission [mailto:john.phillips@pse.com]
Sent: Friday, December 06, 2013 8:53 AM
To: 'Timberman,Toni L (BPA) - TSE-TPP-2'; Jusupovic,Jana D (BPA) - TPC-TPP-4; Siddiqi, Uzma
Cc: Tran, Tuan
Subject: RE: PSANI MOA Discussion

Hi Toni,
Tuan has some traveling this afternoon and is concerned with the weather and would like to reschedule our 1:00 meeting. Maybe we could meet next Thursday when you are in Seattle.
Thanks,
John

_____

From: Timberman,Toni L (BPA) - TSE-TPP-2 [mailto:tltimberman@bpa.gov]
Sent: Monday, December 02, 2013 12:51 PM
To: Timberman,Toni L (BPA) - TSE-TPP-2; Jusupovic,Jana D (BPA) - TPC-TPP-4; 'Uzma Siddiqi (uzma.siddiqi@seattle.gov)'; Phillips, John M - Transmission
Subject: PSANI MOA Discussion
When: Friday, December 06, 2013 1:00 PM-3:00 PM (GMT-08:00) Pacific Time (US & Canada).
Where: Columbia Grid

From:	Timberman,Toni L (BPA) - TSE-TPP-2
To:	"john.phillips@pse.com"; "tuan.tran@Seattle.gov"; "uzma.siddiqi@seattle.gov"; Jusupovic,Jana D (BPA) - TPC-TPP-4
Subject:	Re: PSANI MOA-meet Wed afternoon?
Date:	Tuesday, December 10, 2013 5:20:20 PM

Yes-i extended my hotel for another night with the hope that this would work. What time do you want to meet and where?

----- Original Message -----
From: Phillips, John M - Transmission [mailto:john.phillips@pse.com]
Sent: Tuesday, December 10, 2013 12:56 PM Pacific Standard Time
To: Timberman,Toni L (BPA) - TSE-TPP-2; 'tuan.tran@Seattle.gov' <tuan.tran@Seattle.gov>; 'uzma.siddiqi@seattle.gov' <uzma.siddiqi@seattle.gov>; Jusupovic,Jana D (BPA) - TPC-TPP-4
Subject: RE: PSANI MOA-meet Wed afternoon?

I can do Friday morning as well. Will you be staying in Bellevue on Thursday?

-----Original Message-----
From: Timberman,Toni L (BPA) - TSE-TPP-2 [mailto:tltimberman@bpa.gov]
Sent: Tuesday, December 10, 2013 12:37 PM
To: Phillips, John M - Transmission; 'tuan.tran@Seattle.gov'; 'uzma.siddiqi@seattle.gov'; Jusupovic,Jana D (BPA) - TPC-TPP-4
Subject: Re: PSANI MOA-meet Wed afternoon?

How about Friday morning? Let me know if this would work.

----- Original Message -----
From: Phillips, John M - Transmission [mailto:john.phillips@pse.com]
Sent: Monday, December 09, 2013 11:32 AM Pacific Standard Time
To: Timberman,Toni L (BPA) - TSE-TPP-2; 'tuan.tran@Seattle.gov' <tuan.tran@Seattle.gov>; 'uzma.siddiqi@seattle.gov' <uzma.siddiqi@seattle.gov>; Jusupovic,Jana D (BPA) - TPC-TPP-4
Subject: RE: PSANI MOA-meet Wed afternoon?

Unfortunately I will be coming back from Portland on Wednesday. I am free from 10 to 1 on Thursday.

-----Original Message-----
From: Timberman,Toni L (BPA) - TSE-TPP-2 [mailto:tltimberman@bpa.gov]
Sent: Monday, December 09, 2013 9:04 AM
To: Phillips, John M - Transmission; 'tuan.tran@Seattle.gov'; 'uzma.siddiqi@seattle.gov'; Jusupovic,Jana D (BPA) - TPC-TPP-4
Subject: PSANI MOA-meet Wed afternoon?

I am available all afternoon on Wednesday this week if that would be a convenient time to get together to discuss the MOA. I will be in Seattle for other meetings but have nothing scheduled for that afternoon.

From: Timberman,Toni L (BPA) - TSE-TPP-2
Cc: Jusupovic,Jana D (BPA) - TPC-TPP-4
Subject: Fw: PSANI MOA-meet Wed afternoon?
Date: Tuesday, December 10, 2013 6:31:12 PM

Jana, are you available to call in to this meeting on Friday?

----- Original Message -----
From: Phillips, John M - Transmission [mailto:john.phillips@pse.com]
Sent: Tuesday, December 10, 2013 05:27 PM Pacific Standard Time
To: Timberman,Toni L (BPA) - TSE-TPP-2; 'tuan.tran@Seattle.gov' <tuan.tran@Seattle.gov>; 'uzma.siddiqi@seattle.gov' <uzma.siddiqi@seattle.gov>; Jusupovic,Jana D (BPA) - TPC-TPP-4
Subject: RE: PSANI MOA-meet Wed afternoon?

Do we want to meet at PSE at 9:00?

-----Original Message-----
From: Timberman,Toni L (BPA) - TSE-TPP-2 [mailto:tltimberman@bpa.gov]
Sent: Tuesday, December 10, 2013 5:20 PM
To: Phillips, John M - Transmission; 'tuan.tran@Seattle.gov'; 'uzma.siddiqi@seattle.gov'; Jusupovic,Jana D (BPA) - TPC-TPP-4
Subject: Re: PSANI MOA-meet Wed afternoon?

Yes-i extended my hotel for another night with the hope that this would work. What time do you want to meet and where?

----- Original Message -----
From: Phillips, John M - Transmission [mailto:john.phillips@pse.com]
Sent: Tuesday, December 10, 2013 12:56 PM Pacific Standard Time
To: Timberman,Toni L (BPA) - TSE-TPP-2; 'tuan.tran@Seattle.gov' <tuan.tran@Seattle.gov>; 'uzma.siddiqi@seattle.gov' <uzma.siddiqi@seattle.gov>; Jusupovic,Jana D (BPA) - TPC-TPP-4
Subject: RE: PSANI MOA-meet Wed afternoon?

I can do Friday morning as well. Will you be staying in Bellevue on Thursday?

-----Original Message-----
From: Timberman,Toni L (BPA) - TSE-TPP-2 [mailto:tltimberman@bpa.gov]
Sent: Tuesday, December 10, 2013 12:37 PM
To: Phillips, John M - Transmission; 'tuan.tran@Seattle.gov'; 'uzma.siddiqi@seattle.gov'; Jusupovic,Jana D (BPA) - TPC-TPP-4
Subject: Re: PSANI MOA-meet Wed afternoon?

How about Friday morning? Let me know if this would work.

----- Original Message -----
From: Phillips, John M - Transmission [mailto:john.phillips@pse.com]
Sent: Monday, December 09, 2013 11:32 AM Pacific Standard Time
To: Timberman,Toni L (BPA) - TSE-TPP-2; 'tuan.tran@Seattle.gov' <tuan.tran@Seattle.gov>; 'uzma.siddiqi@seattle.gov' <uzma.siddiqi@seattle.gov>; Jusupovic,Jana D (BPA) - TPC-TPP-4
Subject: RE: PSANI MOA-meet Wed afternoon?

Unfortunately I will be coming back from Portland on Wednesday. I am free from 10 to 1 on Thursday.

-----Original Message-----
From: Timberman,Toni L (BPA) - TSE-TPP-2 [mailto:tltimberman@bpa.gov]
Sent: Monday, December 09, 2013 9:04 AM
To: Phillips, John M - Transmission; 'tuan.tran@Seattle.gov'; 'uzma.siddiqi@seattle.gov'; Jusupovic,Jana D (BPA) - TPC-TPP-4

Subject: PSANI MOA-meet Wed afternoon?

I am available all afternoon on Wednesday this week if that would be a convenient time to get together to discuss the MOA. I will be in Seattle for other meetings but have nothing scheduled for that afternoon.

From:	Tran, Tuan
To:	Timberman,Toni L (BPA) - TSE-TPP-2; "john.phillips@pse.com"; Siddiqi, Uzma; Jusupovic,Jana D (BPA) - TPC-TPP-4
Subject:	RE: PSANI MOA-meet Wed afternoon?
Date:	Tuesday, December 10, 2013 12:42:08 PM

That works for me.

-----Original Message-----
From: Timberman,Toni L (BPA) - TSE-TPP-2 [mailto:tltimberman@bpa.gov]
Sent: Tuesday, December 10, 2013 12:37 PM
To: 'john.phillips@pse.com'; Tran, Tuan; Siddiqi, Uzma; Jusupovic,Jana D (BPA) - TPC-TPP-4
Subject: Re: PSANI MOA-meet Wed afternoon?

How about Friday morning? Let me know if this would work.

----- Original Message -----
From: Phillips, John M - Transmission [mailto:john.phillips@pse.com]
Sent: Monday, December 09, 2013 11:32 AM Pacific Standard Time
To: Timberman,Toni L (BPA) - TSE-TPP-2; 'tuan.tran@Seattle.gov' <tuan.tran@Seattle.gov>; 'uzma.siddiqi@seattle.gov' <uzma.siddiqi@seattle.gov>; Jusupovic,Jana D (BPA) - TPC-TPP-4
Subject: RE: PSANI MOA-meet Wed afternoon?

Unfortunately I will be coming back from Portland on Wednesday. I am free from 10 to 1 on Thursday.

-----Original Message-----
From: Timberman,Toni L (BPA) - TSE-TPP-2 [mailto:tltimberman@bpa.gov]
Sent: Monday, December 09, 2013 9:04 AM
To: Phillips, John M - Transmission; 'tuan.tran@Seattle.gov'; 'uzma.siddiqi@seattle.gov'; Jusupovic,Jana D (BPA) - TPC-TPP-4
Subject: PSANI MOA-meet Wed afternoon?

I am available all afternoon on Wednesday this week if that would be a convenient time to get together to discuss the MOA. I will be in Seattle for other meetings but have nothing scheduled for that afternoon.

From: Jusupovic,Jana D (BPA) - TPC-TPP-4
To: Timberman,Toni L (BPA) - TSE-TPP-2
Subject: RE: PSANI MOA-meet Wed afternoon?
Date: Wednesday, December 11, 2013 9:41:10 AM

Morning Toni,
Just giving you a heads up, I have a TAMC meeting this Friday at 9am as well.
I can always check in with you after the meeting? But it would be nice to hear what the customers say.

PS I have not heard from Uzma since I last spoke with you.

-----Original Message-----
From: Tran, Tuan [mailto:Tuan.Tran@seattle.gov]
Sent: Wednesday, December 11, 2013 7:52 AM
To: Phillips, John M - Transmission; Timberman,Toni L (BPA) - TSE-TPP-2; Siddiqi, Uzma; Jusupovic,Jana D (BPA) - TPC-TPP-4
Subject: RE: PSANI MOA-meet Wed afternoon?

I'm good with 9:00 am.

-----Original Message-----
From: Phillips, John M - Transmission [mailto:john.phillips@pse.com]
Sent: Tuesday, December 10, 2013 5:27 PM
To: 'Timberman,Toni L (BPA) - TSE-TPP-2'; Tran, Tuan; Siddiqi, Uzma; Jusupovic,Jana D (BPA) - TPC-TPP-4
Subject: RE: PSANI MOA-meet Wed afternoon?

Do we want to meet at PSE at 9:00?

-----Original Message-----
From: Timberman,Toni L (BPA) - TSE-TPP-2 [mailto:tltimberman@bpa.gov]
Sent: Tuesday, December 10, 2013 5:20 PM
To: Phillips, John M - Transmission; 'tuan.tran@Seattle.gov'; 'uzma.siddiqi@seattle.gov'; Jusupovic,Jana D (BPA) - TPC-TPP-4
Subject: Re: PSANI MOA-meet Wed afternoon?

Yes-i extended my hotel for another night with the hope that this would work. What time do you want to meet and where?

----- Original Message -----
From: Phillips, John M - Transmission [mailto:john.phillips@pse.com]
Sent: Tuesday, December 10, 2013 12:56 PM Pacific Standard Time
To: Timberman,Toni L (BPA) - TSE-TPP-2; 'tuan.tran@Seattle.gov' <tuan.tran@Seattle.gov>; 'uzma.siddiqi@seattle.gov' <uzma.siddiqi@seattle.gov>; Jusupovic,Jana D (BPA) - TPC-TPP-4
Subject: RE: PSANI MOA-meet Wed afternoon?

I can do Friday morning as well. Will you be staying in Bellevue on Thursday?

-----Original Message-----
From: Timberman,Toni L (BPA) - TSE-TPP-2 [mailto:tltimberman@bpa.gov]
Sent: Tuesday, December 10, 2013 12:37 PM
To: Phillips, John M - Transmission; 'tuan.tran@Seattle.gov'; 'uzma.siddiqi@seattle.gov'; Jusupovic,Jana D (BPA) - TPC-TPP-4
Subject: Re: PSANI MOA-meet Wed afternoon?

How about Friday morning? Let me know if this would work.

----- Original Message -----
From: Phillips, John M - Transmission [mailto:john.phillips@pse.com]
Sent: Monday, December 09, 2013 11:32 AM Pacific Standard Time
To: Timberman,Toni L (BPA) - TSE-TPP-2; 'tuan.tran@Seattle.gov' <tuan.tran@Seattle.gov>; 'uzma.siddiqi@seattle.gov' <uzma.siddiqi@seattle.gov>; Jusupovic,Jana D (BPA) - TPC-TPP-4
Subject: RE: PSANI MOA-meet Wed afternoon?

Unfortunately I will be coming back from Portland on Wednesday. I am free from 10 to 1 on Thursday.

-----Original Message-----
From: Timberman,Toni L (BPA) - TSE-TPP-2 [mailto:tltimberman@bpa.gov]
Sent: Monday, December 09, 2013 9:04 AM
To: Phillips, John M - Transmission; 'tuan.tran@Seattle.gov'; 'uzma.siddiqi@seattle.gov'; Jusupovic,Jana D (BPA) - TPC-TPP-4
Subject: PSANI MOA-meet Wed afternoon?

I am available all afternoon on Wednesday this week if that would be a convenient time to get together to discuss the MOA. I will be in Seattle for other meetings but have nothing scheduled for that afternoon.

From: Timberman,Toni L (BPA) - TSE-TPP-2
To: Weiss,John R (BPA) - TPCV-COVINGTON
Subject: RE: Urgent question on PSANI MOA
Date: Thursday, December 12, 2013 8:05:00 PM

Absolutely! 9:00 in the east building – see you then.

From: Weiss,John R (BPA) - TPCV-COVINGTON
Sent: Thursday, December 12, 2013 8:05 PM
To: Timberman,Toni L (BPA) - TSE-TPP-2
Subject: RE: Urgent question on PSANI MOA
Importance: High

Toni, if it is still OK to attend, I think I will attend the PSE meeting in person. It might be difficult to follow the discussion about so many projects and drawings over the phone.

I believe John Phillips said that the meeting is tomorrow at 9:00 in the east tower building (where transmission staff is located).

Is this OK?

Thank you.

Please contact me if you have questions or comments concerning this information.

Thanks!! - *John R Weiss*
TPC-Covington
jrweiss@bpa.gov
Phone 253-638-3749
Fax 253-638-3707
(b) [redacted]

From: Timberman,Toni L (BPA) - TSE-TPP-2
Sent: Thursday, December 12, 2013 7:37 PM
To: Weiss,John R (BPA) - TPCV-COVINGTON
Subject: FW: Urgent question on PSANI MOA
Importance: High

The MOA is attached

From: Timberman,Toni L (BPA) - TSE-TPP-2
Sent: Wednesday, December 04, 2013 11:31 AM
To: Juj,Hardev S (BPA) - TP-DITT-2
Cc: Tesema,Berhanu K (BPA) - TPP-OPP-3; Jusupovic,Jana D (BPA) - TPC-TPP-4; Leathley,Kimberly A (BPA) - TS-DITT-2-A; Fitzsimmons,David A (BPA) - TSE-TPP-2
Subject: Urgent question on PSANI MOA
Importance: High

Hi Hardev,

We have been discussing the PSANI projects with Puget and Seattle, and an issue has come up on which we need your guidance.

One of the Seattle Preferred Plan projects is the reconductor of the Bothell-SnoKing #1 and #2 lines with high temperature conductor. During the development of the MOA nobody realized that BPA owns the last ½ mile of both of those lines on the SnoKing end. BPA's reconductor of its sections was not included in the estimate – neither was replacement of switchgear at SnoKing in order to accommodate the higher line rating. Note that BPA is not planning to use high-temp. conductor but is designing to use conventional conductor to meet the new SCL rating.

BPA is preparing to do this work, but Seattle is very concerned about how the cost of the BPA project would be handled under the MOA. If the BPA project cost is added to the Seattle project cost, then this would increase Seattle's cost share by 1/3 of the BPA project cost. Seattle believes that this increase will require them to re-submit the MOA for City Council approval.

My thought is, if BPA had realized at the time of developing the MOA that we were responsible for the last half mile, this project would have been included as one of the BPA Preferred Plan projects, with BPA picking up 100% of the funding consistent with the other BPA projects.

I talked to Jana Jusupovic about this and she said that she believes we have enough headroom in the $60 million approved in the business case to absorb the cost of the project without having to re-submit the business case for approval. Actual estimates for the BPA projects are coming in significantly lower than what is in the MOA.

We are meeting with Puget and Seattle this Friday December 6 to discuss this and other concerns related to the MOA, and I am hoping to get a decision from you regarding how to treat the BPA cost related to the reconductor of the BPA section of the Bothell-SnoKing lines.

Should we include it as one of the BPA Preferred Plan projects, and pay for it ourselves or should we add it to the cost of the Seattle Preferred Plan project and split the cost with SCL and Puget?

I apologize for not having $$ to include with this message - let me know if you need $$ before deciding. We should have budget-level estimates by the end of next week.

I have attached the MOA for your reference.

Thanks,
Toni

From: Jusupovic,Jana D (BPA) - TPC-TPP-4
To: Timberman,Toni L (BPA) - TSE-TPP-2
Cc: Weiss,John R (BPA) - TPCV-COVINGTON
Subject: RE: PSANI Update
Date: Wednesday, December 18, 2013 3:37:35 PM

My comments below in red, really appreciate your summary! Thank you.

From: Timberman,Toni L (BPA) - TSE-TPP-2
Sent: Wednesday, December 18, 2013 3:32 PM
To: Jusupovic,Jana D (BPA) - TPC-TPP-4
Cc: Weiss,John R (BPA) - TPCV-COVINGTON
Subject: RE: PSANI Update

John Weiss and I met with Uzma Siddiqi and Tuan Tran of SCL, and John Phillips of Puget last Friday.

The conversation was intended to identify areas of the MOA that might need to be modified through an amendment or a separate Letter Agreement.

Regarding the cost of the BPA portion of the Bothell-SnoKing project. It came down to BPA writing a letter to Seattle and Puget saying that BPA would include the BPA portion of the Bothell-SnoKing project as one of BPA's Preferred Projects, and BPA would fund that project rather than subject it to cost sharing.

I made it clear that this was BPA's intent, but that this decision was not final and we intend to put it through the internal approval process and if/when approval was received, we would write the letter.

Tuan asked why BPa would not use the high-temp conductor, and I said that we had sent that information to SCL already. Uzma said that she thought there would be no problem with the conductor, since Grey's Harbor had used it on a 15kV river crossing. It sounded strange to John and I that she would base a 230 kV decision on a 15 kV project. Puget has not used high temp conductor on their system. Tuan said "so BPA recommends that SCL not use high-temp conductor." I responded that BPA was not recommending anything for Seattle – we just want them to be aware that we do not consider it to be a product good enough to use on our system and wanted SCL to know why we choose not to use it. Also, because SCL was so concerned about potential changes to $$ in the MOA we wanted them to know that BPA thought the project estimate was low. Puget agreed that the estimate seemed low.

Tuan plans to talk to his engineering staff about the high temp conductor and review the estimate.

I said that we do not yet know whether we will re-conductor or re-build our section of the lines. SCL is very concerned about this, saying that if we decide to re-build it would cause

the need for NEPA for the entire length of the line and increase the cost and probably delay the project. Have you heard anything about a decision on this? - I have not heard a decision on this, but I'm not sure why they're worried. If BPA chooses to re-build our section of the line, why would it force the need for a NEPA on the "entire" length of the line? And the cost we mentioned to them already that we intend to fit the bill for.

Toni

From: Jusupovic,Jana D (BPA) - TPC-TPP-4
Sent: Wednesday, December 18, 2013 3:01 PM
To: Timberman,Toni L (BPA) - TSE-TPP-2
Subject: PSANI Update

Hi Toni,

Just checking in to see how today's meeting regarding PSANI went with the customer?

From: Timberman,Toni L (BPA) - TSE-TPP-2
To: Leathley,Kimberly A (BPA) - F-2
Subject: RE: Urgent question on PSANI MOA
Date: Wednesday, December 18, 2013 12:28:00 PM
Attachments: Re Urgent question on PSANI MOA.msg

Larry Bekkedahl agreed to fund, pending review of the business case and internal approval process.
We believe this will fit under the existing business case.
I have attached the e-mail string to this message for your reference.

From: Leathley,Kimberly A (BPA) - TS-DITT-2-A
Sent: Tuesday, December 17, 2013 3:48 PM
To: Timberman,Toni L (BPA) - TSE-TPP-2
Subject: RE: Urgent question on PSANI MOA

Toni – what ever happened with this?

From: Timberman,Toni L (BPA) - TSE-TPP-2
Sent: Wednesday, December 04, 2013 11:31 AM
To: Juj,Hardev S (BPA) - TP-DITT-2
Cc: Tesema,Berhanu K (BPA) - TPP-OPP-3; Jusupovic,Jana D (BPA) - TPC-TPP-4; Leathley,Kimberly A (BPA) - TS-DITT-2-A; Fitzsimmons,David A (BPA) - TSE-TPP-2
Subject: Urgent question on PSANI MOA
Importance: High

Hi Hardev,

We have been discussing the PSANI projects with Puget and Seattle, and an issue has come up on which we need your guidance.

One of the Seattle Preferred Plan projects is the reconductor of the Bothell-SnoKing #1 and #2 lines with high temperature conductor. During the development of the MOA nobody realized that BPA owns the last ½ mile of both of those lines on the SnoKing end. BPA's reconductor of its sections was not included in the estimate – neither was replacement of switchgear at SnoKing in order to accommodate the higher line rating. Note that BPA is not planning to use high-temp. conductor but is designing to use conventional conductor to meet the new SCL rating.

BPA is preparing to do this work, but Seattle is very concerned about how the cost of the BPA project would be handled under the MOA. If the BPA project cost is added to the Seattle project cost, then this would increase Seattle's cost share by 1/3 of the BPA project cost. Seattle believes that this increase will require them to re-submit the MOA for City Council approval.

My thought is, if BPA had realized at the time of developing the MOA that we were responsible for the last half mile, this project would have been included as one of the BPA Preferred Plan projects, with BPA picking up 100% of the funding consistent with the other BPA projects.

I talked to Jana Jusupovic about this and she said that she believes we have enough headroom in the

$60 million approved in the business case to absorb the cost of the project without having to re-submit the business case for approval. Actual estimates for the BPA projects are coming in significantly lower than what is in the MOA.

We are meeting with Puget and Seattle this Friday December 6 to discuss this and other concerns related to the MOA, and I am hoping to get a decision from you regarding how to treat the BPA cost related to the reconductor of the BPA section of the Bothell-SnoKing lines.

Should we include it as one of the BPA Preferred Plan projects, and pay for it ourselves or should we add it to the cost of the Seattle Preferred Plan project and split the cost with SCL and Puget?

I apologize for not having $$ to include with this message - let me know if you need $$ before deciding. We should have budget-level estimates by the end of next week.

I have attached the MOA for your reference.

Thanks,
Toni

From:	Redenbo,Alaina D (BPA) - TP-MODD
To:	Timberman,Toni L (BPA) - TSE-TPP-2; Bekkedahl,Larry N (BPA) - T-DITT-2
Cc:	Juj,Hardev S (BPA) - TP-DITT-2; Hallar Jr,James J (BPA) - TPO-MODD; Rowe,Pilar R (BPA) - TPW-TPP-4; Hamilton,Jessica K (BPA) - TPWP-TPP-4; Jusupovic,Jana D (BPA) - TPC-TPP-4
Subject:	Re: Urgent question on PSANI MOA
Date:	Wednesday, December 04, 2013 8:32:27 PM

Perfect! Thanks Toni for checking in and following our policies.

I didn't see this email and just sent a response asking that you not sign anything and we follow the official approval process.

Please see my email that I just sent about 5 minutes ago.

Thanks again,
Alaina

From: Timberman,Toni L (BPA) - TSE-TPP-2
Sent: Wednesday, December 04, 2013 03:52 PM
To: Redenbo,Alaina D (BPA) - TP-DITT-2; Bekkedahl,Larry N (BPA) - T-DITT2
Cc: Juj,Hardev S (BPA) - TP-DITT-2; Hallar Jr,James J (BPA) - TPO-MODD; Rowe,Pilar R (BPA) - TPW-TPP-4; Hamilton,Jessica K (BPA) - TPWP-MODW; Jusupovic,Jana D (BPA) - TPC-TPP-4
Subject: RE: Urgent question on PSANI MOA

We are not going to sign anything on Friday – I just wanted to let Seattle know what our plan was so that they could ramp down their extreme anxiety. I will be sure to have estimates and make sure we still think we are within our funding before moving forward with anything officially, pending the proper review and approvals.

From: Redenbo,Alaina D (BPA) - TP-DITT-2
Sent: Wednesday, December 04, 2013 3:34 PM
To: Bekkedahl,Larry N (BPA) - T-DITT2
Cc: Juj,Hardev S (BPA) - TP-DITT-2; Timberman,Toni L (BPA) - TSE-TPP-2; Hallar Jr,James J (BPA) - TPO-MODD; Rowe,Pilar R (BPA) - TPW-TPP-4; Hamilton,Jessica K (BPA) - TPWP-MODW
Subject: RE: Urgent question on PSANI MOA

Thanks for the feedback, Larry. FYI, per the message below, Toni said they have the funding to take care of it within the existing PSANI approved project, so we are good to go from a funding standpoint.

Toni, Jim Hallar is out of the office in training today and tomorrow and will be back on Friday.

We need to look at the details of this against A-123. If the scope is changing, we need to take it through the TAMC and can do that through the incremental increase process. Because December 6 is Friday, there is a timing issue, so we can document the exception in A-123 and follow up with TAMC.

One last thought, is if you are going to agree to this, then since you don't have the official estimates back yet, you might want to set some kind of an limit to what we would agree to, as a safe guard.

Thanks,
Alaina

Alaina Redenbo
Transmission Asset Manager
(360) 418-8445

From: Bekkedahl,Larry N (BPA) - T-DITT2
Sent: Wednesday, December 04, 2013 3:10 PM
To: Redenbo,Alaina D (BPA) - TP-DITT-2
Cc: Juj,Hardev S (BPA) - TP-DITT-2; Timberman,Toni L (BPA) - TSE-TPP-2; Hallar Jr,James J (BPA) - TPO-MODD
Subject: Re: Urgent question on PSANI MOA

This a pretty small project and in order for us to request that SCL take it to the City Council with a new Mayor, is not a good idea. If we want to cover the cost we can consider it with the other PASANI projects at a later time. But we should go ahead and fund the project now. Phil West will owe us later.

Larry

On Dec 4, 2013, at 3:01 PM, "Redenbo,Alaina D (BPA) - TP-DITT-2" <adredenbo@bpa.gov> wrote:

> Hi Larry,
>
> Per the message below, can you please provide input on this proposal, since Hardev is gone?
>
> As far as Capital Approval, we are fine with funding this project. However, can you please weigh in on whether it is appropriate for Transmission to fund it?
>
> Thanks,
> Alaina
> Alaina Redenbo
> Transmission Asset Manager
> (360) 418-8445
>
> ---
>
> **From:** Timberman,Toni L (BPA) - TSE-TPP-2
> **Sent:** Wednesday, December 04, 2013 11:33 AM
> **To:** Redenbo,Alaina D (BPA) - TP-DITT-2
> **Cc:** Juj,Hardev S (BPA) - TP-DITT-2
> **Subject:** FW: Urgent question on PSANI MOA
> **Importance:** High
>
> I see that Hardev is out until the 17th and you are acting. Are you able to decide this? If not, can we consult with Larry B.?
>
> ---

From: Timberman,Toni L (BPA) - TSE-TPP-2
Sent: Wednesday, December 04, 2013 11:31 AM
To: Juj,Hardev S (BPA) - TP-DITT-2
Cc: Tesema,Berhanu K (BPA) - TPP-OPP-3; Jusupovic,Jana D (BPA) - TPC-TPP-4; Leathley,Kimberly A (BPA) - TS-DITT-2-A; Fitzsimmons,David A (BPA) - TSE-TPP-2
Subject: Urgent question on PSANI MOA
Importance: High

Hi Hardev,

We have been discussing the PSANI projects with Puget and Seattle, and an issue has come up on which we need your guidance.

One of the Seattle Preferred Plan projects is the reconductor of the Bothell-SnoKing #1 and #2 lines with high temperature conductor. During the development of the MOA nobody realized that BPA owns the last ½ mile of both of those lines on the SnoKing end. BPA's reconductor of its sections was not included in the estimate – neither was replacement of switchgear at SnoKing in order to accommodate the higher line rating. Note that BPA is not planning to use high-temp. conductor but is designing to use conventional conductor to meet the new SCL rating.

BPA is preparing to do this work, but Seattle is very concerned about how the cost of the BPA project would be handled under the MOA. If the BPA project cost is added to the Seattle project cost, then this would increase Seattle's cost share by 1/3 of the BPA project cost. Seattle believes that this increase will require them to re-submit the MOA for City Council approval.

My thought is, if BPA had realized at the time of developing the MOA that we were responsible for the last half mile, this project would have been included as one of the BPA Preferred Plan projects, with BPA picking up 100% of the funding consistent with the other BPA projects.

I talked to Jana Jusupovic about this and she said that she believes we have enough headroom in the $60 million approved in the business case to absorb the cost of the project without having to re-submit the business case for approval. Actual estimates for the BPA projects are coming in significantly lower than what is in the MOA.

We are meeting with Puget and Seattle this Friday December 6 to discuss this and other concerns related to the MOA, and I am hoping to get a decision from you regarding how to treat the BPA cost related to the reconductor of the BPA section of the Bothell-SnoKing lines.

Should we include it as one of the BPA Preferred Plan projects, and pay for it ourselves or should we add it to the cost of the Seattle Preferred Plan project and split the cost with SCL and Puget?

I apologize for not having $$ to include with this message - let me know if you need $$

before deciding. We should have budget-level estimates by the end of next week.

I have attached the MOA for your reference.

Thanks,
Toni

From: Timberman,Toni L (BPA) - TSE-TPP-2
To: "Dorf, Angela"
Subject: Tentative: PSANI SnoKing Reconductor/Rebuild Project

---

This is during my staff meeting...

From: Timberman,Toni L (BPA) - TSE-TPP-2
To: "Dorf, Angela"
Subject: Tentative: PSANI SnoKing Reconductor/Rebuild Project

From: Marleau,Michael L (BPA) - TEP-TPP-1
To: Timberman,Toni L (BPA) - TSE-TPP-2
Cc: angela.dorf@hdrinc.com; Weiss,John R (BPA) - TPCV-COVINGTON
Subject: RE: PSANI SnoKing Reconductor/Rebuild Project
Date: Thursday, January 16, 2014 3:29:01 PM

Toni,

It makes sense for us to rebuild the line with single Jefferson conductor. This will give us 2400A winter and 1970A summer. We'll use the existing route but build with steel engineered structures (monopoles) instead of lattice structures.

Back of the envelop installed cost is $1.4M.

If we reconductor, we cannot meet the summer load rating AND we are at the upper design limit of our existing structures.

I'll follow up with you in more detail and I'll talk to SCL as well.

Thanks,

Mike

_____
From: Timberman,Toni L (BPA) - TSE-TPP-2
Sent: Thursday, January 16, 2014 2:53 PM
To: Marleau,Michael L (BPA) - TEP-TPP-1
Cc: angela.dorf@hdrinc.com; Weiss,John R (BPA) - TPCV-COVINGTON
Subject: RE: PSANI SnoKing Reconductor/Rebuild Project

Mike, what was the outcome of this meeting? I am traveling north next week and would like to update Seattle if possible. Recall that one of their concerns regarding rebuild vs. reconductor was the potential additional environmental review that could delay the Seattle part of the project.

Thanks,

Toni

-----Original Appointment-----
From: Dorf, Angela [mailto:Angela.Dorf@hdrinc.com]
Sent: Wednesday, December 11, 2013 1:59 PM
To: Marleau,Michael L (BPA) - TEP-TPP-1; Tyson,Ivy L (BPA) - TELP-TPP-3; Ashburn,Tyler (BPA) - TELC-TPP-3; Tesema,Berhanu K (BPA) - TPP-OPP-3; Timberman,Toni L (BPA) - TSE-TPP-2; Wilson,Jenny (BPA) - TPP-OPP-3; Cathcart,David A (BPA) - TPP-OPP-3; Jusupovic,Jana D (BPA) - TPC-TPP-4; Gentry,Natasha A (BPA) - TELC-TPP-3
Subject: PSANI SnoKing Reconductor/Rebuild Project
When: Monday, December 23, 2013 10:00 AM-11:00 AM (UTC-08:00) Pacific Time (US & Canada).
Where: Lobby Room TPP

Follow up meeting to decide whether to rebuild or Reconductor the BOTH-SNOK #1 and #2 Lines.

From: Marleau,Michael L (BPA) - TEP-TPP-1
To: Timberman,Toni L (BPA) - TSE-TPP-2
Cc: Wilson,Jenny (BPA) - TPP-OPP-3; angela.dorf@hdrinc.com
Subject: RE: PSANI SnoKing Reconductor/Rebuild Project
Date: Friday, January 17, 2014 1:50:33 PM

Hi Toni, I've been meaning to call Uzma to let her know which way we are proceeding but have not yet. We are going to propose Feb. 24 for hosting a meeting here at TPP. I'll try to call Uzma this afternoon to discuss.

We've been developing a conceptual design for the rebuild option and we would be using the same number of structures except they would be engineered steel structures (monopoles) along the existing route. I'm not anticipating a significant NEPA issue but once we identify the structure locations and staging areas, we'll know more. Our initial Land Rights Review indicates we own the first half mile away from Sno King Substation in fee so we shouldn't have any land rights issues.

Thanks,

Mike

From: Timberman,Toni L (BPA) - TSE-TPP-2
Sent: Friday, January 17, 2014 12:16 PM
To: Marleau,Michael L (BPA) - TEP-TPP-1
Cc: Wilson,Jenny (BPA) - TPP-OPP-3; angela.dorf@hdrinc.com
Subject: FW: PSANI SnoKing Reconductor/Rebuild Project

Mike, I just got a call from Uzma Siddiqi at SCL. Among other topics she brought up the PSANI projects. She said that it was time in February for the next 6-month meeting, and that BPA had agreed to host the meeting.

Uzma talked to Berhanu yesterday at Columbia Grid and he told her we were going with the rebuild. You said you were going to call someone at Seattle to discuss the decision, but I didn't know who you were going to call.

Also, Uzma was wondering about the extent of NEPA that would be required due to the rebuild, and how it might impact the schedule.

That's all for now…

Toni

From: Wilson,Jenny (BPA) - TPP-OPP-3
Sent: Friday, January 17, 2014 12:12 PM
To: Dorf, Angela; Marleau,Michael L (BPA) - TEP-TPP-1; Tyson,Ivy L (BPA) - TELP-TPP-3; Ashburn,Tyler (BPA) - TELC-TPP-3; Tesema,Berhanu K (BPA) - TPP-OPP-3; Timberman,Toni L (BPA) - TSE-TPP-2;

Cathcart,David A (BPA) - TPP-OPP-3; Jusupovic,Jana D (BPA) - TPC-TPP-4; Gentry,Natasha A (BPA) - TELC-TPP-3
Cc: Larvick,Carol M (BPA) - TPMC-OPP-3; Youngs,Kathi (BPA) - TFC-COVINGTON; Nicholson,Todd S (BPA) - TELF-TPP-3; Young,Jadene L (BPA) - TFNB-SNOHOMISH; Bepple,Gavin E (BPA) - TFND-SNOHOMISH; Porter,Jeffrey E (BPA) - TFNC-SNOHOMISH; Cobb,Eric T (BPA) - TFNB-SNOHOMISH; Scott,Steve G (BPA) - TFNF-SNOHOMISH; Rounds,Cynthia M (BPA) - TERP-TPP-4; Groven,Dennis M (BPA) - TPWE-TPP-4; Surratt,Laura M (BPA) - TPWE-TPP-4; Berry,Theresa M (BPA) - TER-TPP-3; Roseburg,Tom (BPA) - TECS-AMPS; O'Claire,David E (BPA) - TELD-TPP-3; Gutierrez,Arnold (CONTR) - TPWE-TPP-4; Nguyen,Steven T (CONTR) - TPMC-OPP-3; Moffett,Justin T (BPA) - KEC-4
Subject: RE: PSANI SnoKing Reconductor/Rebuild Project

<< Message: RE: Bothell - Sno King Options >>

At the meeting it was decided to go with **Option 2: Rebuild both sections of line with AAC Jefferson. This would provide a winter ampacity of 2425A and a summer ampacity of 1970A.**

I assume the existing disconnects will need to be replaced with 3000A disconnects. If so, will the footings need to be replaced?

Attached is a Draft PRD for the Rebuild of the Bothell-Snoking #1 and #2 230 kV lines.

Please let me know if you any comments. << File: 314195-01.pdf >>

Thanks,

Jenny

From: Dorf, Angela [mailto:Angela.Dorf@hdrinc.com]

Sent: Friday, December 20, 2013 3:25 PM

To: Dorf, Angela; Marleau,Michael L (BPA) - TEP-TPP-1; Tyson,Ivy L (BPA) - TELP-TPP-3; Ashburn,Tyler (BPA) - TELC-TPP-3; Tesema,Berhanu K (BPA) - TPP-OPP-3; Timberman,Toni L (BPA) - TSE-TPP-2; Wilson,Jenny (BPA) - TPP-OPP-3; Cathcart,David A (BPA) - TPP-OPP-3; Jusupovic,Jana D (BPA) - TPC-TPP-4; Gentry,Natasha A (BPA) - TELC-TPP-3

Subject: PSANI SnoKing Reconductor/Rebuild Project

When: Monday, January 13, 2014 10:00 AM-11:00 AM (GMT-08:00) Pacific Time (US & Canada).

Where: Conf Room 351 TPP

Sorry for the change.....again

Follow up meeting to decide whether to rebuild or Reconductor the BOTH-SNOK #1 and #2 Lines.

From:	Marleau,Michael L (BPA) - TEP-TPP-1
To:	Ashburn,Tyler (BPA) - TELC-TPP-3; Tyson,Ivy L (BPA) - TPS-TPP-1
Cc:	Cathcart,David A (BPA) - TPP-OPP-3; Wilson,Jenny (BPA) - TPP-OPP-3; Dorf, Angela
Subject:	RE: Bothell - Sno King Options
Date:	Thursday, December 05, 2013 12:21:30 PM

Thanks Tyler,

Yes on the options. The ballpark estimates will provide us with a basis to choose. My preference would be for option 3 but it would be good get on "order of magnitude" cost.

Mike

From: Ashburn,Tyler (BPA) - TELC-TPP-3
Sent: Thursday, December 05, 2013 10:58 AM
To: Tyson,Ivy L (BPA) - TELP-TPP-3
Cc: Marleau,Michael L (BPA) - TEP-TPP-1; Cathcart,David A (BPA) - TPP-OPP-3; Wilson,Jenny (BPA) - TPP-OPP-3
Subject: Bothell - Sno King Options

Ivy,

Here's a breakdown of the three options that they're considering:

BPA's section of each line is approx 0.5 miles.

Option 1: Reconductor the BPA Bothell-SnoKing 1 line with ACSR/TW Deschutes will give a 1900A rating at -5C (Winter) and a 1520A rating at 30C (Summer) for 100C MOT. Structure 3/3 a 4A1 steel suspension tower will need to be moved BOL 50' with new legs and footings to remove impairments.

Reconductor the BPA Bothell-SnoKing 2 line with AAC/TW Hood conductor will give a 1900A rating at -5C (Winter) and a 1550A rating at 30C (Summer) for 100C MOT. Wood structure 3/7 will need to be replaced with a pole 10' longer and a higher class pole for loading to remove impairments.

This option provides the minimum required current for winter rating, but falls short of the desired level in the summer. It is the lower cost alternative that reuses the majority of the structures.

Option 2: Rebuild both sections of line with AAC Jefferson. This would provide a winter ampacity of 2425A and a summer ampacity of 1970A

Option 3: Rebuild both sections of line with Twin ACSR Deschutes. This would provde a winter ampacity of 3800A and a summer ampacity of 3040A

Right now they're just looking for ballpark estimates to compare the options.

Mike, Jenny, or Dave - please correct me if I've summarized inaccurately.

Thanks,

Tyler

DISTRICT: SNOHOMISH

MINIMUM HISTORICAL TEMPERATURE: -24.4 C (-28.9 F)
SEISMIC ZONE 3 = ZPA G-LEVEL: 0.40

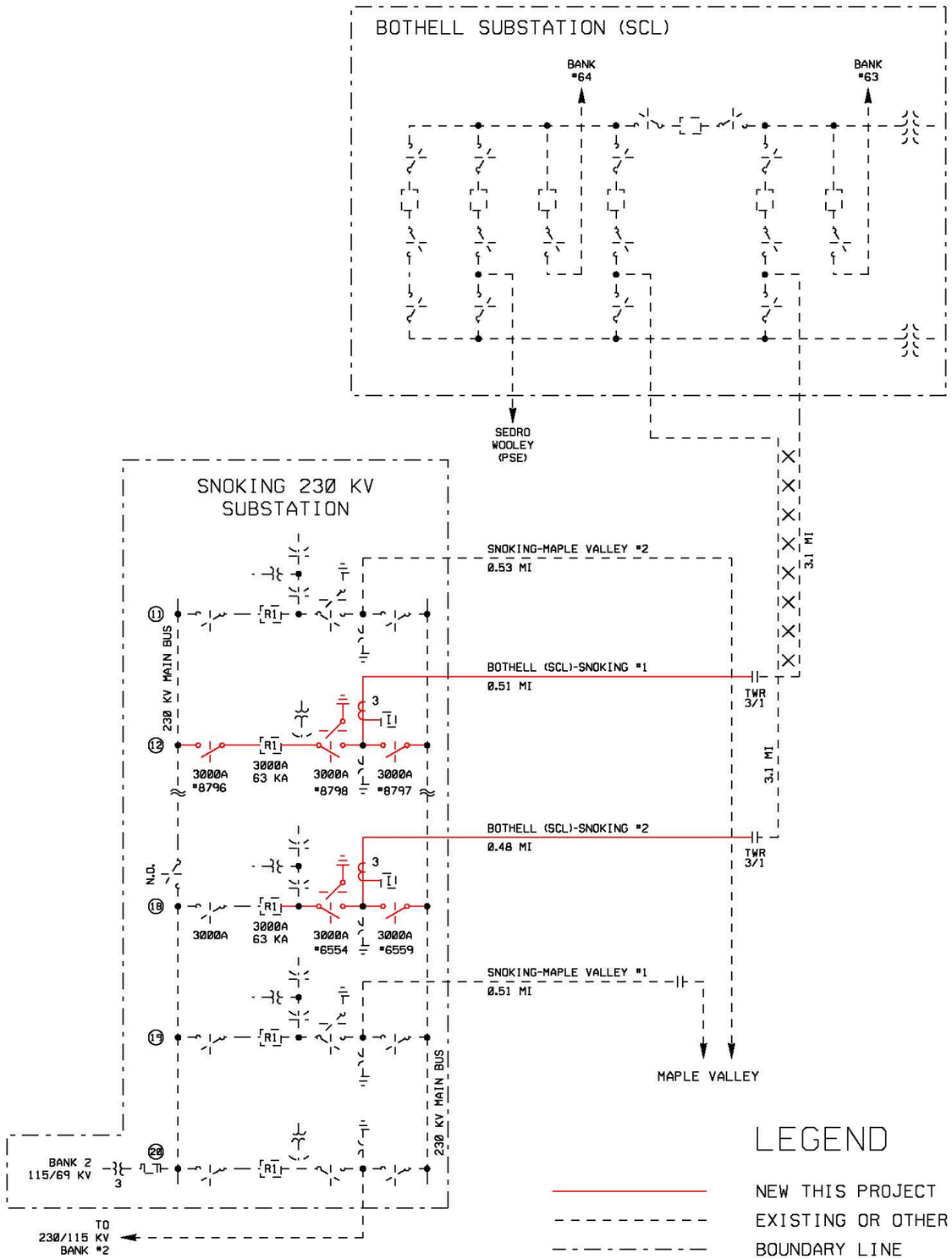

NOTES:

1. THIS PROJECT WILL IMPROVE SYSTEM RELIABILITY IN THE PUGET SOUND AREA AND WILL HELP TO SUPPORT WINTER SOUTH TO NORTH TRANSFERS.

2A. REBUILD 0.51 MILE OF THE BOTHELL -SNOKING #1 LINE FROM THE SNOKING 230 KV BUS IN BAY 12 TO TOWER 3/1 WITH ACC JEFFERSON CONDUCTOR TO ACHIEVE A WINTER RATING OF 2425A AND A SUMMER RATING OF 1970A. AT CHANGE OF OWNERSHIP ON TOWER 3/1, INSTALL HARDWARE TO ACCOMMODATE NEW CONDUCTOR.

2B. AT SNOKING SUBSTATION REPLACE THE EXISTING 1600 A DISCONNECTS #8796, #8798 AND #8797 WITH 2000A DISCONNECTS ON THE BOTHELL -SNOKING #1 230 Kv LINE IN BAY 12. REPLACE THE CT'S ON LINE #1 WITH 3000A CT'S.

3B. REBUILD 0.48 MILE OF THE BOTHELL - SNOKING #2 LINE FROM THE SNOKING 230 KV BUS IN BAY 18 TO TOWER 3/1 WITH AAC JEFFERSON CONDUCTOR TO ACHIEVE A WINTER RATING OF 2425A AND A SUMMER RATING OF 1970A. AT CHANGE OF OWNERSHIP ON TOWER 3/1 INSTALL HARDWARE TO ACCOMMODATE NEW CONDUCTOR.

3B. AT SNOKING SUBSTATION REPLACE THE EXISTING 1600 A DISCONNECTS #6554 AND #6559 WITH 3000A DISCONNECTS. REPLACE THE CT'S ON LINE #2 WITH 3000A CT'S.

4. THE EXISTING LINE RELAYS AND TRANSFER TRIP ON THE BOTHELL-SNOKING #1 AND #2 230 KV LINES WILL BE REPLACED UNDER THE SUSTAIN PROGRAM (TFY110085).

5. OUTAGE COORDINATION WITH SEATTLE CITY LIGHT (SCL) WILL BE REQUIRED DURING CONSTRUCTION OF THIS PROJECT.

6. COORDINATING ENGINEER:
   JENNY WILSON-TPP/OPP-3
   PHONE: (360) 619-6816

7. PLANNING ENGINEER:
   DAVE CATHCART TPP/OPP-3
   PHONE: (360) 619-6854

8. CAD TECHNICIAN:
   ALEX VASILIU-TPM/OPP-3
   PHONE: (360) 619-6773

DRAFT PRELIMINARY
JAN-17-2014

FAULT DUTY AMPS (2011)

		1LG	3LG
MAPLE VALLEY	230 KV	37,033	38,078
SNOKING	115 KV	33,697	37,011
SNOKING	230 KV	29,161	36,309
SNOKING	525 KV	13,298	17,242
BOTHELL	115 KV	43,230	39,267
BOTHELL	230 KV	32,767	37,066

NO.	COMPUTER REVISION ONLY	PLANNING ENGINEER	APPROVED

PROJECT REQUIREMENTS DIAGRAM

UNITED STATES DEPARTMENT OF ENERGY
BONNEVILLE POWER ADMINISTRATION
HEADQUARTERS, PORTLAND, OREGON

PROPOSED ENERGIZATION DATE(S): OCT-02-2017

OPERATIONS & PLANNING

PRELIMINARY APPROVED DATE

PLANNING ENGINEER: JENNY WILSON

BOTHELL–SNOKING #1 AND #2
230 KV LINE
REBUILD PROJECT

FINAL APPROVED DATE

SERIAL	SOURCE	SIZE	SHEET	REVISION
314195	TP	A3	1 OF 1	0

From: Timberman,Toni L (BPA) - TSE-TPP-2

To: ADL_TSE_ALL; Albright,Margaret I (BPA) - TOT-DITT-2; Bausch,Michael D (BPA) - TSRS-DITT-1; Bennett,Barry (BPA) - LT-7; Blasdel,Lori J (BPA) - KSB-6; Brank,John E (BPA) - TPCV-OLYMPIA; Caldwell,Chad N (BPA) - TPCV-OLYMPIA; Dalton,Mary Ann (BPA) - SE-5; delaCruz,Adelmo (BPA) - TFN-SNOHOMISH; Ellison,Richard A (BPA) - TOD-DITT-1; Fiedler,Paul A (BPA) - TG-DITT-2; Flores,Joe (BPA) - KSB-6; Gibson,Paula L (BPA) - TSES-TPP-2; Gillman,Richard A (BPA) - TS-DITT-2; Graves Pyrch,Karen S (BPA) - KSC-4; Green,Laura E (BPA) - KSB-MODD; Hanel,David H (BPA) - TSR-DITT-1; Holden-Baker,Susan M (BPA) - TSS-DITT-1; Johnson,Kelly G (BPA) - TPC-TPP-4; King,Robert D (BPA) - TS-DITT-2; Lambert,James A (BPA) - KSM-6; Litzinger,Joseph R (BPA) - KSB-6; Markham,Brian S (BPA) - TPCF-MEAD-GOB; Olsen,Carol A (BPA) - KSC-TPP-1; Rodrigues,Melvin T (BPA) - TPP-OPP-3; Snodgrass,Theodore M (BPA) - TOV-MEAD; TBL VPs; Tesema,Berhanu K (BPA) - TPP-OPP-3; Thompson,Garry R (BPA) - PSE-MEAD-GOB; Tieu,Henry (BPA) - KSM-6; Weiss,John R (BPA) - TPCV-COVINGTON

Subject: Timberman Customer Report October-December 2013

Date: Monday, January 20, 2014 3:18:00 PM

Attachments: 2013 October-December Customer Report.doc

Attached is my customer report for the months of October-December 2013. Please give me a call or e-mail if you have any questions.
Toni

Toni L. Timberman
Senior Transmission Account Executive
Bonneville Power Administration
(360) 619-6015 office
(b) (6) [redacted]
tltimberman@bpa.gov

This document may contain SOC-Restricted Information. Under FERC Standards of Conduct SOC-Restricted Information may not be shared with Marketing Function Employees (MFEs) unless certain criteria have been met (e.g., voluntary consent by the customer, a public OASIS posting, system emergencies, or other exceptions). Please take care to remove or otherwise redact the SOC-Restricted information before forwarding or otherwise sharing with Marketing Function Employees.

For more information on Standards of Conduct please use the following resources.
BPA SOC Help Line: 503-230-4677
BPA SOC Web Page:
http://internal.bpa.gov/Policy/FERCSOC/Pages/FERCStandardsofConduct.aspx
SOC e-mail box: SOC@BPA.gov

This document may contain SOC-Restricted Information. Under FERC Standards of Conduct SOC-Restricted Information may not be shared with Marketing Function Employees (MFEs) unless certain criteria have been met (e.g., voluntary consent by the customer, a public OASIS posting, system emergencies, or other exceptions). Please take care to remove or otherwise redact the SOC-Restricted information before forwarding or otherwise sharing with Marketing Function Employees.

For more information on Standards of Conduct please use the following resources.
BPA SOC Help Line: 503-230-4677
BPA SOC Web Page: http://internal.bpa.gov/Policy/FERCSOC/Pages/FERCStandardsofConduct.aspx
SOC e-mail box: SOC@BPA.gov

Customer Activity Report - Toni Timberman

October 2013 – December 2013

Hampton Lumber - no current issues

PGP – Public Generation Pool - no active discussions
Current members of PGP are Chelan County PUD, Clark Public Utilities, Cowlitz County PUD, Douglas County PUD, Eugene Water & Electric Board, Klickitat PUD, Grant County PUD, Lewis County PUD, Tacoma Power, Snohomish County PUD, and Pend Oreille PUD. BPA is invited occasionally to discuss specific issues of concern to the group.

Port of Seattle (Sea-Tac International Airport) (Trevor Emtman; CSE John Weiss; PSAE Shannon Greene)
No recent activity.

Port of Tacoma (Trevor Thornsley; CSE John Brank)
Port of Tacoma approached BPA about using or purchasing BPA's property on which Tacoma substation is located, for the purpose of installing railroad tracks. BPA is entering into a reimbursable agreement to assess the potential need to relocate transmission towers, and to assess the extent of environmental process that would be needed. The assessment will inform BPA's decision whether or not to proceed further with discussions regarding the Port's use of the property. John Brank and I are meeting with the Port on Tuesday January 21 to discuss the latest edits to the reimbursable agreement.

Puget Sound Energy - Energy Delivery (not Merchant)
(Theresa Burch, Zach Gill Sanford; Jennifer Creekpaum; PSAE Scott Wilson; CSE John Weiss)
Next meeting Wednesday January 22 – regular monthly meetings.

Puget Sound Energy - Transmission
(John Phillips; Pete Jones; PSAE Scott Wilson; CSEs John Weiss & Chad Caldwell)
Next meeting September 25 in Bellevue– regular monthly meetings

- The MOU for joint studies of possible mutually-beneficial joint projects in the Puget Sound area was signed in December, 2011. The current effort within BPA to determine principles for participating in joint projects may help guide BPA's response to Puget's request for BPA participation.
- St. Clair 230/115 kV substation is still in the works, with energization planned for April or May 2014. This project connects Puget's new St. Clair substation to BPA's

This document may contain SOC-Restricted Information. Under FERC Standards of Conduct SOC-Restricted Information may not be shared with Marketing Function Employees (MFEs) unless certain criteria have been met (e.g., voluntary consent by the customer, a public OASIS posting, system emergencies, or other exceptions). Please take care to remove or otherwise redact the SOC-Restricted information before forwarding or otherwise sharing with Marketing Function Employees.

For more information on Standards of Conduct please use the following resources.
BPA SOC Help Line: 503-230-4677
BPA SOC Web Page: http://internal.bpa.gov/Policy/FERCSOC/Pages/FERCStandardsofConduct.aspx
SOC e-mail box: SOC@BPA.gov

S. Tacoma-Olympia 230 kV line. Puget's construction of this project mitigated the need for BPA to add another 230/115 kV transformer at Olympia. The scope of the project has expanded to include replacement of the batteries and charger at S. Tacoma substation and additional fiber work at Olympia. BPA and Puget decided to split the cost of the battery and charger replacement.

- BPA submitted a line/load interconnection request to Puget for the extension of BPA's Tanner Tap line to Puget's North Bend substation. Hoping to discuss study results and cost at our January 22 meeting.
- BPA and Puget are discussing transfer of ownership of equipment in each other's substations, to simplify compliance reporting. An expedited process is being developed that should make this go smoothly. So far we have identified equipment at Kitsap, Olympia and Sedro.
- Puget submitted a Line/Load interconnection request to connect their new Cherry Point substation to BPA's Custer-Intalco #1(?) line. This project would require rebuilding both Custer-Intalco lines. BPA has completed the initial studies and is waiting for Puget's decision to proceed further with the project.
- Puget submitted a draft Line/Load interconnection request for their new Grand Ridge substation, connecting to the Sammamish-Maple Valley line. Energization expected in 2018.

Rathdrum Power, LLC (Mike Cashon; CSE Victor Hitchens)

- No recent activity

Seattle City Light

(Robert Cromwell, Cindy Wright, PSAE Paul Munz; CSE John Weiss)
Regular monthly meetings in Seattle

- BPA and Seattle have concluded development of a comprehensive Interconnected Transmission Systems Agreement, which details change of ownership, vegetation management and maintenance responsibilities, as well as other information, for each point where BPA's and Seattle's systems "touch". Seattle has received City Council permission to sign the agreement.
- BPA and Seattle are working on a Maintenance, Ownership and Operations Agreement to document the equipment at Boundary substation. Ownership of some equipment in the basement of the control house is yet to be determined. This agreement is replacing the prior agreement signed in 1966.

Simpson Tacoma Kraft (STK) (Edward Chao; CSE John Brank)
No current activity.

This document may contain SOC-Restricted Information. Under FERC Standards of Conduct SOC-Restricted Information may not be shared with Marketing Function Employees (MFEs) unless certain criteria have been met (e.g., voluntary consent by the customer, a public OASIS posting, system emergencies, or other exceptions). Please take care to remove or otherwise redact the SOC-Restricted information before forwarding or otherwise sharing with Marketing Function Employees.

For more information on Standards of Conduct please use the following resources.
BPA SOC Help Line: 503-230-4677
BPA SOC Web Page: http://internal.bpa.gov/Policy/FERCSOC/Pages/FERCStandardsofConduct.aspx
SOC e-mail box: SOC@BPA.gov

Snohomish County PUD (Craig Collar; Chris Heimgartner; PSAE Scott Wilson; CSE John Weiss)
Monthly meetings 4th Wednesday of each month in Everett

- A Balancing Area Authority Service Agreement (BAASA) for Jackson Hydro has been sent to Snohomish for signature. While this resource has been in place for many years, a BAASA was never executed. BPA and Snohomish are working out the technical details associated with this agreement.
- Snohomish has two pending battery storage projects connecting to their system. The first, owned by UniEnergy Technologies (1.5 MW), is expected to energize first quarter 2014. The second, owned by Snohomish (1.0 MW), has a later schedule. These are the first projects of this type to connect in the BPA BAA, and determining how to treat this load/generation has been an interesting process.
- Snohomish is now proceeding aggressively with the addition of a 230 kV transformer at their Beverly Park substation. BPA will convert one Snohomish-Beverly Park line to 230 kV operation. The BPA work associated with this project is at BPA's expense, in accordance with a 1992 agreement with Snohomish. Energization late 2015/early 2016.

Tacoma Power (Nicolas Garcia; Joe Wilson; PSAE Kirsten Watts; CSE John Brank)
Next meeting September 25 – regular monthly meetings.

- BPA and Tacoma are developing a comprehensive Interconnection Agreement like the one recently developed with Seattle City Light. The purpose of the agreement is to document our agreement on details such as change of ownership, maintenance responsibilities, veg management, etc at each place where our systems touch.
- BPA-T has been working with BPA-P and the Pierce County Mutuals to put in place the necessary arrangements for dropping Pierce County Mutual load for certain contingencies on Tacoma's system. Terry Mundorf is coordinating the PCM effort to install communications and control equipment that would meet BPA's and Tacoma's approval. The PCM load is served by transfer through Tacoma, and at this time there is no ability to drop that load, which comprises about 20% of Tacoma's load. Tacoma is forced to drop its own load rather than sharing the burden with PCM. The current proposal has preliminary approval pending installation and testing. Tacoma is very concerned that the PCM be able to drop the necessary load within 10 minutes of being notified. Good progress is being made on the technology and the procedures, but not ready for testing yet.

Tanner Electric Co-op (Steve Walter; CSE John Weiss; PSAE Shannon Greene)
Next meeting January 23, 2014 – semi-annual check-in, with additional conversations as needed.

This document may contain SOC-Restricted Information. Under FERC Standards of Conduct SOC-Restricted Information may not be shared with Marketing Function Employees (MFEs) unless certain criteria have been met (e.g., voluntary consent by the customer, a public OASIS posting, system emergencies, or other exceptions). Please take care to remove or otherwise redact the SOC-Restricted information before forwarding or otherwise sharing with Marketing Function Employees.

For more information on Standards of Conduct please use the following resources.
BPA SOC Help Line: 503-230-4677
BPA SOC Web Page: http://internal.bpa.gov/Policy/FERCSOC/Pages/FERCStandardsofConduct.aspx
SOC e-mail box: SOC@BPA.gov

- Puget had requested to replace all of the interchange meters at the Tanner PODs with their own meters so that they could get real-time data associated with BPA load they serve by transfer. Puget has recently backed away from that project in favor of obtaining real-time data from their own meters at the other ends of the lines, and then getting data from the BPA meters at each site via MDMR. John Weiss has been participating in the discussions with Puget and Tanner on this project.

Other initiatives:

PSANI / OSG –

The OSG Agreement terminated 12/31/2013 No plans to replace this agreement.
PSANI Projects – regular meetings are being held to discuss the various projects identified for completion by Seattle, Puget and BPA under the PSANI MOA. It appears that the first project will be the Bothell-SnoKing #1 and #2 lines, to be reconductored by Seattle with high temperature-low sag conductor. BPA will re-build its ½ mile of each line out of SnoKing substation using conventional conductor.

From:	Dorf, Angela
To:	Siddiqi, Uzma (Uzma.Siddiqi@seattle.gov); leann.kostek@pse.com; Marleau,Michael L (BPA) - TEP-TPP-1; Tesema,Berhanu K (BPA) - TPP-OPP-3; Wilson,Jenny (BPA) - TPP-OPP-3; Cathcart,David A (BPA) - TPP-OPP-3; Timberman,Toni L (BPA) - TSE-TPP-2; Jusupovic,Jana D (BPA) - TPC-TPP-4
Cc:	Ambrose, Philip; Ewry, Eleanor - Transmission; Strauch, Bradley R
Subject:	PSANI Project Managers Meeting
Date:	Wednesday, February 12, 2014 10:41:59 AM
Attachments:	PSANI - Project Managers Meeting Agenda.pdf

Agenda for meeting attached.

Thank you,

ANGELA DORF, PLS

HDR, Inc.
Project Manager

1001 SW 5th Ave. STE 1900 | Portland, OR 97204
c: 760.641.1551
angela.dorf@hdrinc.com | hdrengineering.com
Follow Us – Facebook | Twitter | YouTube

PSANI

Project Managers Meeting

7500 NE 41st Street
Vancouver, WA 98662
Lobby Conference Room

Meeting Agenda

February 24, 2014 -Time (10:00AM~ 12:00AM) – BPA Lobby Meeting Room

- BPA Plan of Work for BPA-owned section of Bothell-SnoKing lines
- BPA Environmental work plan for Bothell-SnoKing lines
- PSE Energize Eastside Update
- SCL Projects Update, District's comments and concerns
- Review Action Item list

From:	Egusa,Sean R (CONTR) - TSP-TPP-2
To:	Scott,Brian M (BPA) - TEP-TPP-1; Timberman,Toni L (BPA) - TSE-TPP-2; Nichols-Kinas,Lauren (BPA) - TS-DITT-2; Jones,Christopher M (BPA) - TSP-TPP-2; Christen,Camille A (BPA) - LT-7
Cc:	Marleau,Michael L (BPA) - TEP-TPP-1; Sinha,Amit (BPA) - TEP-TPP-1
Subject:	RE: Puget sound area upgrades - PSAST
Date:	Friday, February 14, 2014 2:56:07 PM
Attachments:	image001.png

Wow, that was fast, thanks Brian and thanks Michael for providing this level of information so promptly!
Sean

_____
From: Scott,Brian M (BPA) - TEP-TPP-1
Sent: Friday, February 14, 2014 12:19 PM
To: Egusa,Sean R (CONTR) - TSP-TPP-2; Timberman,Toni L (BPA) - TSE-TPP-2; Nichols-Kinas,Lauren (BPA) - TSP-TPP-2; Jones,Christopher M (BPA) - TSP-TPP-2; Christen,Camille A (BPA) - TSP-TPP-2
Cc: Marleau,Michael L (BPA) - TEP-TPP-1; Sinha,Amit (BPA) - TEP-TPP-1
Subject: FW: Puget sound area upgrades - PSAST

All,

Mike put together a great overview of the various parts of the project and current schedules. Hope this helps! Thanks Mike!

Brian

From: Marleau,Michael L (BPA) - TEP-TPP-1
Sent: Friday, February 14, 2014 11:52 AM
To: Scott,Brian M (BPA) - TEP-TPP-1
Cc: Sinha,Amit (BPA) - TEP-TPP-1
Subject: RE: Puget sound area upgrades - PSAST

Brian,

BPA is coordinating with Seattle City Light, Puget Sound Energy, and BC Hydro on line ratings, schedules, scope, environmental review, and costs. Since the MOA is a very high level document, we've made some adjustments during the course of the project as we've developed the detailed design. We have updated the Project Requirements Diagrams (PRDs) during the project so they would reflect the current scope better than the MOA.

The link to the project Sharepoint site is below:

http://internal.bpa.gov/sites/t-proj-mgmnt/OfficialProjectWorkspaceSite/P00094/Pages/Home.aspx

It has tabs to various parts of the project (e.g., Raver, Covington, Transmission Lines, RAS, Sno King-Bothell, and Foreign Utility Coordination).

For the BPA portion of the project, the general schedule is as follows:

Raver and Covington Substation and Lines
Design Issue: 10/1/2014
Construction Start: 4/1/2015
In Service: 10/15/2015

Sno King Substation and Sno King-Bothell 230kV Lines (1&2)
Design Issue: 4/15/15
Construction Start: 1/15/16
In Service: 7/1/16

Remedial Action Schemes (RAS) For the RAS projects, we're still bundling with other projects for the

affected sites. We're also coordinating with BC Hydro for the Ingeldow interconnection.
Design FY15
Construction FY16 and FY17

Let me know if you need anything else.

Thanks,
Mike

From: Timberman,Toni L (BPA) - TSE-TPP-2
Sent: Friday, February 14, 2014 09:52 AM
To: Egusa,Sean R (CONTR) - TSP-TPP-2; Scott,Brian M (BPA) - TEP-TPP-1
Cc: Nichols-Kinas,Lauren (BPA) - TSP-TPP-2; Jones,Christopher M (BPA) - TSP-TPP-2; Christen,Camille A (BPA) - TSP-TPP-2
Subject: RE: Puget sound area upgrades - PSAST

We are actively working with SCL and Puget on these. All projects are moving forward, although they may be a bit different than what is described in the MOA, and the schedule might have been tweaked on some projects.

From: Egusa,Sean R (CONTR) - TSP-TPP-2
Sent: Friday, February 14, 2014 9:50 AM
To: Timberman,Toni L (BPA) - TSE-TPP-2; Scott,Brian M (BPA) - TEP-TPP-1
Cc: Nichols-Kinas,Lauren (BPA) - TSP-TPP-2; Jones,Christopher M (BPA) - TSP-TPP-2; Christen,Camille A (BPA) - TSP-TPP-2
Subject: Puget sound area upgrades - PSAST
Importance: High

Toni and Brian,

In working with planning on this year's NOS cluster study, one of the assumptions is that the fixes identified in the PSAST initiative out of Columbia Grid are moving forward.

My question, do either of you know the status???

Brian, I note in your monthly CAB update that lines 23 and 24 specifically refer to the PSANI MOA and I'm wondering if these are part of the PSAST package for those facilities that BPA is responsible for???
[cid:image001.png@01CF2975.72F9F510]

Here is the language from the 2010 cluster study describing the PSAST fixes identified for PSANI:

1.1.1 Puget Sound Area Northern Intertie (PSANI)
A Columbia Grid sponsored Puget Sound Area Study Team (PSAST) has completed a technical report proposing projects to reduce the risk of PSANI events, curtailments or generation re-dispatches required for system operating limits. Maintaining a 1,500 MW south to north system operating limit for a wide range of conditions was a primary focus. The projects identified by the PSAST are listed in the Table 2.1 below.

Project Description

Projected Energization Date

(1) Expansion of Northern Intertie RAS

2012

(2) Install series inductors on Seattle City Light 115 kV Cables

2013

(3) Rebuild the Bothell – Snoking 230 kV lines

2013

(4) Reconductor the Maple Valley – Snoking 230 kV lines with high temperature conductor

2015

(5) Add a third 500/230 kV transformer at Covington Substation

2015

(6) Add a second Portal Way 230/115 kV transformer

2015

Table 2.1 Puget Sound Area Northern Intertie (PSANI) Projects

The projected energization dates are taken directly from the PSAST report, "Transmission Expansion Plan for the Puget Sound Area", completed on October 20, 2010.

These projects have been identified by the PSAST to reduce the risk of PSANI events and address existing system bottlenecks that show up for different operating conditions, prior to granting any new TSRs. The final plan of service may not be reflected in the project descriptions above pending agreement between participating entities in the PSAST. In regards to the NOS 2010 Northern Intertie south to north and north to south TSRs, PSAST reinforcements (2), (3), and (4) are required for Northern Intertie south to north, while (6) is required for Northern Intertie north to south. These projects address existing system limitations that are impacted by the new TSRs. Therefore, it is necessary to address these bottlenecks before the new service is provided.

Reinforcements (1) and (5) are not critical for NOS 2010 TSRs. Reinforcement (1) provides operational flexibility for outages of the Chief Joseph – Monroe 500 kV line and Monroe – Echo Lake 500 kV line and reinforcement (5) is required primarily to serve load growth in the Puget Sound Area (PSA).

The next steps for the PSAST utilities is to finalize the plan of service, determine cost allocation, capacity rights, ownership, and construction responsibility. These projects are recognized as under development to maintain existing system reliability and obligations for the PSA utilities. For that reason they are not included in the 2010 NOS projects for financial analysis, but new TSRs will not be approved without the completion of the reinforcements for existing needs.

Cheers,

Sean

From: Egusa,Sean R (CONTR) - TSP-TPP-2
To: Timberman,Toni L (BPA) - TSE-TPP-2
Subject: RE: Puget sound area upgrades - PSAST
Date: Friday, February 14, 2014 10:05:02 AM
Attachments: image001.png

Shouldn't Columbia grid be keeping one updated? If not, then is there any way to get the projected energization dates updated and do you think the scope changes will impact the resulting flows that could impact/modify past study results?

Is it okay to request a copy of the MOA (or is this a case of curiosity killed the cat?).

Thanks!

Sean

From: Timberman,Toni L (BPA) - TSE-TPP-2
Sent: Friday, February 14, 2014 10:01 AM
To: Egusa,Sean R (CONTR) - TSP-TPP-2; Scott,Brian M (BPA) - TEP-TPP-1
Cc: Nichols-Kinas,Lauren (BPA) - TSP-TPP-2; Jones,Christopher M (BPA) - TSP-TPP-2; Christen,Camille A (BPA) - TSP-TPP-2
Subject: RE: Puget sound area upgrades - PSAST

no

From: Egusa,Sean R (CONTR) - TSP-TPP-2
Sent: Friday, February 14, 2014 9:56 AM
To: Timberman,Toni L (BPA) - TSE-TPP-2; Scott,Brian M (BPA) - TEP-TPP-1
Cc: Nichols-Kinas,Lauren (BPA) - TSP-TPP-2; Jones,Christopher M (BPA) - TSP-TPP-2; Christen,Camille A (BPA) - TSP-TPP-2
Subject: RE: Puget sound area upgrades - PSAST

Thanks Toni, very helpful. Is there a posted schedule that looks at the portfolio of projects that we can reference as one of the PSAST parties?
Thanks,
Sean

From: Timberman,Toni L (BPA) - TSE-TPP-2
Sent: Friday, February 14, 2014 9:52 AM
To: Egusa,Sean R (CONTR) - TSP-TPP-2; Scott,Brian M (BPA) - TEP-TPP-1
Cc: Nichols-Kinas,Lauren (BPA) - TSP-TPP-2; Jones,Christopher M (BPA) - TSP-TPP-2; Christen,Camille A (BPA) - TSP-TPP-2
Subject: RE: Puget sound area upgrades - PSAST

We are actively working with SCL and Puget on these. All projects are moving forward, although they may be a bit different than what is described in the MOA, and the schedule might have been tweaked on some projects.

From: Egusa,Sean R (CONTR) - TSP-TPP-2
Sent: Friday, February 14, 2014 9:50 AM

To: Timberman,Toni L (BPA) - TSE-TPP-2; Scott,Brian M (BPA) - TEP-TPP-1
Cc: Nichols-Kinas,Lauren (BPA) - TSP-TPP-2; Jones,Christopher M (BPA) - TSP-TPP-2; Christen,Camille A (BPA) - TSP-TPP-2
Subject: Puget sound area upgrades - PSAST
Importance: High

Toni and Brian,

In working with planning on this year's NOS cluster study, one of the assumptions is that the fixes identified in the PSAST initiative out of Columbia Grid are moving forward.

My question, do either of you know the status???

Brian, I note in your monthly CAB update that lines 23 and 24 specifically refer to the PSANI MOA and I'm wondering if these are part of the PSAST package for those facilities that BPA is responsible for???

Here is the language from the 2010 cluster study describing the PSAST fixes identified for PSANI:

1.1.1 Puget Sound Area Northern Intertie (PSANI)

A Columbia Grid sponsored Puget Sound Area Study Team (PSAST) has completed a technical report proposing projects to reduce the risk of PSANI events, curtailments or generation re-dispatches required for system operating limits. Maintaining a 1,500 MW south to north system operating limit for a wide range of conditions was a primary focus. The projects identified by the PSAST are listed in the Table 2.1 below.

Project Description	**Projected Energization Date**
(1) Expansion of Northern Intertie RAS	2012
(2) Install series inductors on Seattle City Light 115 kV Cables	2013
(3) Rebuild the Bothell – Snoking 230 kV lines	2013
(4) Reconductor the Maple Valley – Snoking 230 kV lines with high	2015

temperature conductor	
(5) Add a third 500/230 kV transformer at Covington Substation	2015
(6) Add a second Portal Way 230/115 kV transformer	2015

Table 2.1 Puget Sound Area Northern Intertie (PSANI) Projects

The projected energization dates are taken directly from the PSAST report, "Transmission Expansion Plan for the Puget Sound Area", completed on October 20, 2010.

These projects have been identified by the PSAST to reduce the risk of PSANI events and address existing system bottlenecks that show up for different operating conditions, prior to granting any new TSRs. The final plan of service may not be reflected in the project descriptions above pending agreement between participating entities in the PSAST. In regards to the NOS 2010 Northern Intertie south to north and north to south TSRs, PSAST reinforcements (2), (3), and (4) are required for Northern Intertie south to north, while (6) is required for Northern Intertie north to south. These projects address existing system limitations that are impacted by the new TSRs. Therefore, it is necessary to address these bottlenecks before the new service is provided.

Reinforcements (1) and (5) are not critical for NOS 2010 TSRs. Reinforcement (1) provides operational flexibility for outages of the Chief Joseph – Monroe 500 kV line and Monroe – Echo Lake 500 kV line and reinforcement (5) is required primarily to serve load growth in the Puget Sound Area (PSA).

The next steps for the PSAST utilities is to finalize the plan of service, determine cost allocation, capacity rights, ownership, and construction responsibility. These projects are recognized as under development to maintain existing system reliability and obligations for the PSA utilities. For that reason they are not included in the 2010 NOS projects for financial analysis, but new TSRs will not be approved without the completion of the reinforcements for existing needs.

Cheers,

Sean

From:	Scott,Brian M (BPA) - TEP-TPP-1
To:	Timberman,Toni L (BPA) - TSE-TPP-2; Egusa,Sean R (CONTR) - TSP-TPP-2
Cc:	Nichols-Kinas,Lauren (BPA) - TS-DITT-2; Jones,Christopher M (BPA) - TSP-TPP-2; Christen,Camille A (BPA) - LT-7; Sinha,Amit (BPA) - TEP-TPP-1
Subject:	Re: Puget sound area upgrades - PSAST
Date:	Friday, February 14, 2014 10:23:28 AM
Attachments:	image001.png

I'll have Mike Marleau, the PM, send out a schedule.

From: Timberman,Toni L (BPA) - TSE-TPP-2
Sent: Friday, February 14, 2014 10:00 AM
To: Egusa,Sean R (CONTR) - TSP-TPP-2; Scott,Brian M (BPA) - TEP-TPP-1
Cc: Nichols-Kinas,Lauren (BPA) - TSP-TPP-2; Jones,Christopher M (BPA) - TSP-TPP-2; Christen,Camille A (BPA) - TSP-TPP-2
Subject: RE: Puget sound area upgrades - PSAST

no

From: Egusa,Sean R (CONTR) - TSP-TPP-2
Sent: Friday, February 14, 2014 9:56 AM
To: Timberman,Toni L (BPA) - TSE-TPP-2; Scott,Brian M (BPA) - TEP-TPP-1
Cc: Nichols-Kinas,Lauren (BPA) - TSP-TPP-2; Jones,Christopher M (BPA) - TSP-TPP-2; Christen,Camille A (BPA) - TSP-TPP-2
Subject: RE: Puget sound area upgrades - PSAST

Thanks Toni, very helpful. Is there a posted schedule that looks at the portfolio of projects that we can reference as one of the PSAST parties?
Thanks,
Sean

From: Timberman,Toni L (BPA) - TSE-TPP-2
Sent: Friday, February 14, 2014 9:52 AM
To: Egusa,Sean R (CONTR) - TSP-TPP-2; Scott,Brian M (BPA) - TEP-TPP-1
Cc: Nichols-Kinas,Lauren (BPA) - TSP-TPP-2; Jones,Christopher M (BPA) - TSP-TPP-2; Christen,Camille A (BPA) - TSP-TPP-2
Subject: RE: Puget sound area upgrades - PSAST

We are actively working with SCL and Puget on these. All projects are moving forward, although they may be a bit different than what is described in the MOA, and the schedule might have been tweaked on some projects.

From: Egusa,Sean R (CONTR) - TSP-TPP-2
Sent: Friday, February 14, 2014 9:50 AM
To: Timberman,Toni L (BPA) - TSE-TPP-2; Scott,Brian M (BPA) - TEP-TPP-1
Cc: Nichols-Kinas,Lauren (BPA) - TSP-TPP-2; Jones,Christopher M (BPA) - TSP-TPP-2; Christen,Camille A (BPA) - TSP-TPP-2
Subject: Puget sound area upgrades - PSAST
Importance: High

Toni and Brian,

In working with planning on this year's NOS cluster study, one of the assumptions is that the fixes identified in the PSAST initiative out of Columbia Grid are moving forward.

My question, do either of you know the status???

Brian, I note in your monthly CAB update that lines 23 and 24 specifically refer to the PSANI MOA and I'm wondering if these are part of the PSAST package for those facilities that BPA is responsible for???

Here is the language from the 2010 cluster study describing the PSAST fixes identified for PSANI:

1.1.1 Puget Sound Area Northern Intertie (PSANI)

A Columbia Grid sponsored Puget Sound Area Study Team (PSAST) has completed a technical report proposing projects to reduce the risk of PSANI events, curtailments or generation re-dispatches required for system operating limits. Maintaining a 1,500 MW south to north system operating limit for a wide range of conditions was a primary focus. The projects identified by the PSAST are listed in the Table 2.1 below.

Project Description	**Projected Energization Date**
(1) Expansion of Northern Intertie RAS	2012
(2) Install series inductors on Seattle City Light 115 kV Cables	2013
(3) Rebuild the Bothell – Snoking 230 kV lines	2013
(4) Reconductor the Maple Valley – Snoking 230 kV lines with high temperature conductor	2015
(5) Add a third 500/230 kV transformer at Covington Substation	2015
(6) Add a second Portal Way 230/115 kV transformer	2015

Table 2.1 Puget Sound Area Northern Intertie (PSANI) Projects

The projected energization dates are taken directly from the PSAST report, "Transmission Expansion Plan for the Puget Sound Area", completed on October 20, 2010.

These projects have been identified by the PSAST to reduce the risk of PSANI events and address existing system bottlenecks that show up for different operating conditions, prior to granting any new TSRs. The final plan of service may not be reflected in the project descriptions above pending agreement between participating entities in the PSAST. In regards to the NOS 2010 Northern Intertie south to north and north to south TSRs, PSAST reinforcements (2), (3), and (4) are required for Northern Intertie south to north, while (6) is required for Northern Intertie north to south. These projects address existing system limitations that are impacted by the new TSRs. Therefore, it is necessary to address these bottlenecks before the new service is provided.

Reinforcements (1) and (5) are not critical for NOS 2010 TSRs. Reinforcement (1) provides operational flexibility for outages of the Chief Joseph – Monroe 500 kV line and Monroe – Echo Lake 500 kV line and reinforcement (5) is required primarily to serve load growth in the Puget Sound Area (PSA).

The next steps for the PSAST utilities is to finalize the plan of service, determine cost allocation, capacity rights, ownership, and construction responsibility. These projects are recognized as under development to maintain existing system reliability and obligations for the PSA utilities. For that reason they are not included in the 2010 NOS projects for financial analysis, but new TSRs will not be approved without the completion of the reinforcements for existing needs.

Cheers,

Sean

From:	Timberman,Toni L (BPA) - TSE-TPP-2 on behalf of Dorf, Angela
To:	Jackson II,Jerry L (BPA) - TOT-DITT-2; Siddiqi, Uzma (Uzma.Siddiqi@seattle.gov); leann.kostek@pse.com; Marleau,Michael L (BPA) - TEP-TPP-1; Tesema,Berhanu K (BPA) - TPP-OPP-3; Wilson,Jenny (BPA) - TPP-OPP-3; Cathcart,David A (BPA) - TPP-OPP-3; Timberman,Toni L (BPA) - TSE-TPP-2; Jusupovic,Jana D (BPA) - TPC-TPP-4
Cc:	Ambrose, Philip; Ewry, Eleanor - Transmission; Strauch, Bradley R
Subject:	FW: PSANI Project Managers Meeting

-----Original Appointment-----
From: Dorf, Angela [mailto:Angela.Dorf@hdrinc.com]
Sent: Tuesday, February 18, 2014 1:45 PM
To: Dorf, Angela; Siddiqi, Uzma (HYPERLINK "mailto:Uzma.Siddiqi@seattle.gov" Uzma.Siddiqi@seattle.gov); HYPERLINK "mailto:leann.kostek@pse.com" leann.kostek@pse.com; Marleau,Michael L (BPA) - TEP-TPP-1; Tesema,Berhanu K (BPA) - TPP-OPP-3; Wilson,Jenny (BPA) - TPP-OPP-3; Cathcart,David A (BPA) - TPP-OPP-3; Timberman,Toni L (BPA) - TSE-TPP-2; Jusupovic,Jana D (BPA) - TPC-TPP-4
Cc: Ambrose, Philip; Ewry, Eleanor - Transmission; Strauch, Bradley R
Subject: PSANI Project Managers Meeting
When: Monday, February 24, 2014 10:00 AM-12:00 PM (UTC-08:00) Pacific Time (US & Canada).
Where: Conf Room153 TPP

PHONE BRIDGE INFO FOR PARTICIPANTS:
To call into the bridge dial ext. 8001 (360-418-8001), and at any time during or after the message and the double beep, enter 6053 #.

The system will not allow access into the bridge until 5 minutes before the start time of your conference.

Callers can mute or un-mute their lines by pressing *6. If you will not be speaking, please mute your line to minimize noise on the bridge.

Participants should not place this call on hold; doing so will cause other participants to hear their hold music.

If you need assistance dialing into the bridge, have questions or problems, or need to cancel this bridge, please contact the BPA Phone office at x8888 (360-418-8888) or x5050 (503-230-5050).

From: Timberman,Toni L (BPA) - TSE-TPP-2
To: "Dorf, Angela"
Subject: RE: PSANI Project Managers Meeting
Date: Wednesday, February 19, 2014 2:43:00 PM

Angela, I invited Jerry Jackson to this meeting. He is on detail to System Planning from Technical Operations, and is very familiar with these projects. He wanted to attend with me to see what role I played in the discussion as an AE.

-----Original Appointment-----
From: Dorf, Angela [mailto:Angela.Dorf@hdrinc.com]
Sent: Tuesday, February 18, 2014 1:45 PM
To: Dorf, Angela; Siddiqi, Uzma (Uzma.Siddiqi@seattle.gov); leann.kostek@pse.com; Marleau,Michael L (BPA) - TEP-TPP-1; Tesema,Berhanu K (BPA) - TPP-OPP-3; Wilson,Jenny (BPA) - TPP-OPP-3; Cathcart,David A (BPA) - TPP-OPP-3; Timberman,Toni L (BPA) - TSE-TPP-2; Jusupovic,Jana D (BPA) - TPC-TPP-4
Cc: Ambrose, Philip; Ewry, Eleanor - Transmission; Strauch, Bradley R
Subject: PSANI Project Managers Meeting
When: Monday, February 24, 2014 10:00 AM-12:00 PM (UTC-08:00) Pacific Time (US & Canada).
Where: Conf Room153 TPP

PHONE BRIDGE INFO FOR PARTICIPANTS:

To call into the bridge dial ext. 8001 (360-418-8001), and at any time during or after the message and the double beep, enter 6053 #.

The system will not allow access into the bridge until 5 minutes before the start time of your conference.

Callers can mute or un-mute their lines by pressing *6. If you will not be speaking, please mute your line to minimize noise on the bridge.

Participants should not place this call on hold; doing so will cause other participants to hear their hold music.

If you need assistance dialing into the bridge, have questions or problems, or need to cancel this bridge, please contact the BPA Phone office at x8888 (360-418-8888) or x5050 (503-230-5050).

From:	Dorf, Angela
To:	Siddiqi, Uzma (Uzma.Siddiqi@seattle.gov); leann.kostek@pse.com; Marleau,Michael L (BPA) - TEP-TPP-1; Tesema,Berhanu K (BPA) - TPP-OPP-3; Wilson,Jenny (BPA) - TPP-OPP-3; Cathcart,David A (BPA) - TPP-OPP-3; Timberman,Toni L (BPA) - TSE-TPP-2; Jusupovic,Jana D (BPA) - TPC-TPP-4
Cc:	Ambrose, Philip; Ewry, Eleanor - Transmission; Strauch, Bradley R; Jackson II,Jerry L (BPA) - TOT-DITT-2; Duncan, Margaret
Subject:	PSANI Project Managers Meeting
Date:	Monday, February 24, 2014 8:30:46 AM
Attachments:	PSANI - Project Managers Meeting Agenda Updated.pdf

---

Updated meeting agenda attached for this morning's meeting.

Thank you,

ANGELA DORF, PLS

HDR, Inc.
Project Manager

1001 SW 5th Ave. STE 1900 | Portland, OR 97204
c: 760.641.1551
angela.dorf@hdrinc.com | hdrengineering.com
Follow Us – Facebook | Twitter | YouTube

PSANI Agenda 2/24/2014 Conference Call

PHONE BRIDGE INFO FOR PARTICIPANTS:

To call into the bridge dial ext. 8001 (360-418-8001), and at any time during or after the message and the double beep, enter 6053 #.

The system will not allow access into the bridge until 5 minutes before the start time of your conference.

Callers can mute or un-mute their lines by pressing *6. If you will not be speaking, please mute your line to minimize noise on the bridge.

Participants should not place this call on hold; doing so will cause other participants to hear their hold music.

If you need assistance dialing into the bridge, have questions or problems, or need to cancel this bridge, please contact the BPA Phone office at x8888 (360-418-8888) or x5050 (503-230-5050).

1. Recent updates from BPA:
    a. BPA has made the decision to rebuild the Sno King – Bothell No. 1 and 2 Lines. The BPA has run through the three options for the Sno King–Bothell 230kV lines (1&2) and it makes sense for us to rebuild those ½ mile sections with 11 engineered steel structures and conventional AAC Jefferson conductor. Our initial estimate is $1.1million (not including changing out the disconnect switches inside Sno King Substation). This design provides us with the following ratings (2400A Winter, 1970A Summer). This meets the minimum required current rating for winter and summer. The Sno King Substation disconnect switches will be rated at 3000A.
    b. The cost sharing arrangement outlined in the MOA seems very flexible. BPA is proposing to pay the costs for the Sno King –Bothell Lines 1 & 2 rebuild instead of including them in the 1/3 cost sharing arrangement with PSE and SCL. The preference to update the agreement is with a Letter Agreement between BPA/SCL/PSE.
    c. BPAs' Legal Counsel and Environmental group has determined that each of the projects identified in the MOA have stand-alone benefits and as such, the environmental review for each of the projects may take place separately. This will allow us to move forward with the environmental review of individual projects.
2. Projects Update and schedules
    a. SCL
    b. PSE
    c. BPA
        i. Raver
        ii. Covington
        iii. Raver-Covington Transmission Lines
        iv. Sno King Substation and Sno King – Bothell Lines 1&2
3. Coordination Sno King – Bothell Lines 1 & 2 Design (next steps)

From: Timberman,Toni L (BPA) - TSE-TPP-2
To: Marleau,Michael L (BPA) - TEP-TPP-1
Subject: RE: PSANI question at Sno King Substation (TFY130641)
Date: Thursday, March 06, 2014 2:44:00 PM

Thanks, Mike!

From: Marleau,Michael L (BPA) - TEP-TPP-1
Sent: Thursday, March 06, 2014 2:37 PM
To: Timberman,Toni L (BPA) - TSE-TPP-2; Jusupovic,Jana D (BPA) - TPC-TPP-4; Angela Dorf (angela.dorf@hdrinc.com)
Subject: FW: PSANI question at Sno King Substation (TFY130641)

We're OK to proceed with BPA funding the costs for the Sno King Substation Disconnect Switch Upgrade and the Sno King – Bothell 230kV Lines 1 & 2 rebuild separately from the SCL and PSE projects identified in the MOA.

I'll forward draft verbiage to be included in a letter agreement soon.

Thanks,
Mike

From: Hallar Jr,James J (BPA) - TPO-MODD
Sent: Thursday, March 06, 2014 2:28 PM
To: Marleau,Michael L (BPA) - TEP-TPP-1
Cc: Kjelland,Mark C (BPA) - TEP-TPP-3; Sinha,Amit (BPA) - TEP-TPP-1
Subject: RE: PSANI question at Sno King Substation (TFY130641)

Michael, I concur with your proposal. Please proceed. Thanks for the reminder. Jim

Jim Hallar
Transmission Asset Management
360-418-8810

From: Marleau,Michael L (BPA) - TEP-TPP-1
Sent: Thursday, March 06, 2014 8:58 AM
To: Hallar Jr,James J (BPA) - TPO-MODD
Subject: FW: PSANI question at Sno King Substation (TFY130641)

Hi Jim, here's what I mentioned yesterday.

Could you let me know if you concur with my proposed solution?

Many thanks,
Mike

From: Marleau,Michael L (BPA) - TEP-TPP-1
Sent: Monday, February 24, 2014 3:40 PM
To: Hallar Jr,James J (BPA) - TPO-MODD; Jusupovic,Jana D (BPA) - TPC-TPP-4

Cc: Angela Dorf (angela.dorf@hdrinc.com)
Subject: PSANI question at Sno King Substation (TFY130641)

Jim,

I wanted to propose a solution at one of the PSANI sites.

We have a very vague customer agreement in place with Puget Sound Energy (PSE) and Seattle City Light (SCL) to share costs for some PSANI projects while other PSANI projects are fully funded by BPA (e.g., Raver Substation, Covington Substation, RAS, etc.).

During the course of coordinating projects that were originally to be designed and constructed by SCL, we discovered that BPA owns ½ mile of two lines (Sno King-Bothell 230kV Lines No. 1 and No. 2).

It would make things more consistent and much easier to implement if the work on BPA assets were to be designed, constructed, and fully funded by BPA. We have sufficient budget to do this work ourselves (work estimated to be $1.5 million). This is a small amount compared to the overall project. Especially since some costs (Land) will be coming in significantly under budget.

The reason it would be much easier to implement is that with different owners, materials, and standards, coordinating an additional layer (costs) would increase the difficulty exponentially. I could certainly explain in more detail if you would like.

This is what I'm proposing to do by I want you get you approval before we formalize this.

Many thanks,
Mike

From: Timberman,Toni L (BPA) - TSE-TPP-2
To: "john.phillips@pse.com"
Subject: need to talk PSANI projects
Date: Thursday, March 13, 2014 1:03:00 PM

Hi John,
Could you please give me a call or send me an e-mail? We need to discuss the four additional Letter Agreements that SCL believes are needed to capture changes since the MOA was signed.
Toni

From: Phillips, John M - Transmission
To: Timberman,Toni L (BPA) - TSE-TPP-2
Subject: RE: PSANI Project Managers Meeting Notes
Date: Tuesday, March 18, 2014 5:04:14 PM

Hi Toni,
I have a call into Phil West but haven't heard anything back. I did talk to Booga and her expectation is that the meeting will focus on project updates. For PSE our project is growing in the public consciousness and it is likely SCL and BPA may get contacted about options they might have and I think she wanted to prepare them for that. Also, at the executive level, just make sure everyone is still headed in the same direction. I mentioned the proposed additional letter agreements and she didn't have any concerns.
I'll let you know if I hear anything else.
John

John Phillips
Manager of Transmission Contracts
Electric Transmission
Location: 355 110 Ave NE, Bellevue WA
Phone: (425) 462-3579

From: Timberman,Toni L (BPA) - TSE-TPP-2 [mailto:tltimberman@bpa.gov]
Sent: Thursday, March 13, 2014 2:16 PM
To: Phillips, John M - Transmission
Subject: FW: PSANI Project Managers Meeting Notes

From: Dorf, Angela [mailto:Angela.Dorf@hdrinc.com]
Sent: Thursday, March 13, 2014 11:57 AM
To: Siddiqi, Uzma (Uzma.Siddiqi@seattle.gov); leann.kostek@pse.com; Marleau,Michael L (BPA) - TEP-TPP-1; Tesema,Berhanu K (BPA) - TPP-OPP-3; Wilson,Jenny (BPA) - TPP-OPP-3; Cathcart,David A (BPA) - TPP-OPP-3; Timberman,Toni L (BPA) - TSE-TPP-2; Jusupovic,Jana D (BPA) - TPC-TPP-4
Cc: Ambrose, Philip; Ewry, Eleanor - Transmission; Strauch, Bradley R; Jackson II,Jerry L (BPA) - TPP-OPP-3; Duncan, Margaret
Subject: PSANI Project Managers Meeting Notes

Attached please find the notes from our meeting last month.

Thank you,

ANGELA DORF, PLS

HDR, Inc.
Project Manager

1001 SW 5th Ave. STE 1900 | Portland, OR 97204
c: 760.641.1551
angela.dorf@hdrinc.com | hdrengineering.com
Follow Us – Facebook | Twitter | YouTube

PSANI Project

Project Managers Meeting Notes

February 24, 2013 @ 10:00AM

Attendees:

Name:	Organization	Role	Contact Info:
Mike Marleau	BPA	Project Manager	mlmarleau@bpa.gov
Angela Dorf	HDR	Assistant Project Manager	angela.dorf@hdrinc.com
Berhanu Tesema	BPA	Transmission Planner	bktesema@bpa.gov
Jenny Wilson	BPA	Coordinating Engineer	jlwilson@bpa.gov
Jerry Jackson	BPA		jljackson@bpa.gov
Jana Jusupovic	BPA	Customer Service Engineering	jdjusupovic@bpa.gov
Toni Timberman	BPA	Customer Account Executive	tltimberman@bpa.gov
David Cathcart	BPA	Planning Engineer	dacathcart@bpa.gov
Uzma Siddiqi	Seattle City Light (SCL)	Principal Systems Engineer	Uzma.siddiqi@seattle.gov
Philip Ambrose	Seattle City Light (SCL)	Sr. Project Manager	Philip.ambrose@seattle.gov
Bob Risch	Seattle City Light (SCL)	Transmission Engineer	Bob risch@seattle.gov
Leann Kostek	Puget Sound Energy (PSE)	Project Manager	leann.kostek@pse.com
Brad Strauch	Puget Sound Energy (PSE)		bradley.strauch@pse.com
Eleanor Ewry	Puget Sound Energy (PSE)	Transmission	Eleanor.Ewry@pse.com

- SnoKing-Bothell No.1 & No.2 230kV Lines
  - BPA has made the decision to rebuild the SnoKing – Bothell No. 1 and 2 Lines. The BPA has run through the three options for the SnoKing–Bothell 230kV lines (1&2) and it makes sense for us to rebuild those ½ mile sections with 11 engineered steel structures and conventional AAC Jefferson conductor. Our initial estimate is $1.1million (not including changing out the disconnect switches inside SnoKing Substation). This design provides us with the following ratings (2400AWinter, 1970A Summer). This meets the minimum required current rating for winter and summer. The SnoKing Substation disconnect switches will be rated at 3000A.
  - The cost sharing arrangement outlined in the MOA seems very flexible. BPA is proposing to pay the costs for the SnoKing –Bothell Lines 1 & 2 rebuild instead of including them in the 1/3 cost sharing arrangement with PSE and SCL.
  - BPAs' Legal Counsel and Environmental group has determined that each of the projects identified in the MOA have stand-alone benefits and as such, the environmental review for each of the projects may take place separately. This will allow us to move forward with the environmental review of individual projects.
- SCL Project Updates and Schedules

PSANI Project

Project Managers Meeting Notes

- Series Inductor Project for Denny is at a 60% design
- Series Inductor Project for Broad Street is due to start design in July 2014.
- Reconductor Project will start preliminary engineering this year

- PSE Project Updates and Schedules
  - Community Engagement Announcement was December 4, 2013. PSE is looking at having a preliminary alignment solutions by end of this year, with a submittal in 2015 and permitting in 2017
- BPA Project Updates and Schedules
  - Raver and Covington Substations will have 90% Design Issue in July 2014, IFC in October 2014, with construction in April 2015. This work includes storm water management, yard expansion, line reterminations, equipment replacement and new ring bus.
  - RAS projects will be starting next year; Design 2015-2017 with installation 2016-2017. Project involves upgrades at two control centers and seven sites, one site being a BC Hydro site.

- Action item list:
  - Mike will work with Jana and Toni to prepare a draft of the Letters of Agreement. Hope to have this sent to both SCL and PSE by end of March.
  - Mike to follow up with Justin Moffett to see if we can separate the SCL and BPA NEPA documents for SnoKing-Bothell Lines 1 & 2.
  - Uzma will host the next PM meeting in September.
  - BPA and SCL technical team will meet early April to review project details for the Bothell-SnoKing project. Angela will send Uzma and Philip a few dates for this meeting. Possible site visit after meeting.

From: Phillips, John M - Transmission
To: Timberman,Toni L (BPA) - TSE-TPP-2
Subject: RE: PSANI Project Managers Meeting Notes
Date: Tuesday, March 18, 2014 5:04:14 PM

Hi Toni,
I have a call into Phil West but haven't heard anything back. I did talk to Booga and her expectation is that the meeting will focus on project updates. For PSE our project is growing in the public consciousness and it is likely SCL and BPA may get contacted about options they might have and I think she wanted to prepare them for that. Also, at the executive level, just make sure everyone is still headed in the same direction. I mentioned the proposed additional letter agreements and she didn't have any concerns.
I'll let you know if I hear anything else.
John

John Phillips
Manager of Transmission Contracts
Electric Transmission
Location: 355 110 Ave NE, Bellevue WA
Phone: (425) 462-3579

From: Timberman,Toni L (BPA) - TSE-TPP-2 [mailto:tltimberman@bpa.gov]
Sent: Thursday, March 13, 2014 2:16 PM
To: Phillips, John M - Transmission
Subject: FW: PSANI Project Managers Meeting Notes

From: Dorf, Angela [mailto:Angela.Dorf@hdrinc.com]
Sent: Thursday, March 13, 2014 11:57 AM
To: Siddiqi, Uzma (Uzma.Siddiqi@seattle.gov); leann.kostek@pse.com; Marleau,Michael L (BPA) - TEP-TPP-1; Tesema,Berhanu K (BPA) - TPP-OPP-3; Wilson,Jenny (BPA) - TPP-OPP-3; Cathcart,David A (BPA) - TPP-OPP-3; Timberman,Toni L (BPA) - TSE-TPP-2; Jusupovic,Jana D (BPA) - TPC-TPP-4
Cc: Ambrose, Philip; Ewry, Eleanor - Transmission; Strauch, Bradley R; Jackson II,Jerry L (BPA) - TPP-OPP-3; Duncan, Margaret
Subject: PSANI Project Managers Meeting Notes

Attached please find the notes from our meeting last month.

Thank you,

ANGELA DORF, PLS

HDR, Inc.
Project Manager

1001 SW 5th Ave. STE 1900 | Portland, OR 97204
c: 760.641.1551
angela.dorf@hdrinc.com | hdrengineering.com
Follow Us – Facebook | Twitter | YouTube

From: Juj,Hardev S (BPA) - TP-DITT-2
To: Timberman,Toni L (BPA) - TSE-TPP-2
Subject: Re: Info for PSANI Project meeting Monday
Date: Thursday, March 20, 2014 10:04:29 AM

Thanks

From: Timberman,Toni L (BPA) - TSE-TPP-2
Sent: Wednesday, March 19, 2014 04:41 PM
To: Juj,Hardev S (BPA) - TP-DITT-2
Cc: Fitzsimmons,David A (BPA) - TSE-TPP-2
Subject: Info for PSANI Project meeting Monday

Hi Hardev,

I heard from Puget that there is a PSANI Project VP meeting coming up, and had talked to John Phillips so that he could brief Booga Gilbertson prior to the meeting. I believe the meeting is scheduled for next Monday, March 24 (I peeked at your calendar).

I have attached the information from John Phillips, and also the notes from the last Puget/SCL/BPA Project Manager conf. call.

Out of that conf. call it was determined that we would need three additional letter agreements to add more detail related to the PSANI MOA:

The first Letter Agreement would say that BPA will fully fund its portion of the Bothell-SnoKing #1 and #2 line project. In the MOA it was not realized that BPA owns the first ½ mile out of SnoKing of these lines, and that switchgear in SnoKing would need to be replaced. It was described in the MOA as entirely a SCL project. BPA plans to re-build its section rather than reconductor, and will not be using high-capacity conductor.

The second Letter Agreement would be between BPA and Puget and would say that any BPA funds used for the Puget projects would be allocated to the substation project and not for the transmission line project. Give me a call if you want to discuss the rationale behind this. Seattle will execute a similar Letter Agreement with Puget.

The third Letter Agreement will describe how $$ for these projects will change hands, and what the invoicing protocol will be. The MOA requires that this agreement be developed. **The MOA said there would be a true-up at the end of all projects, but BPA. Puget and SCL are not comfortable with this and want to make progress payments as the projects proceed, with a true-up at the end. Please let me know if you are ok with this.**

I am drafting these agreements, and we hope to execute within the next six months.

I need your approval for proceeding with these three Letter Agreements. I am working with the PM, Mike Marleau and Jana Jusupovic on this. Because the BPA funds have already been committed under the MOA and these agreements are just modifying the administration of the MOA, I believe I

have delegated authority to sign these agreements, but let me know if you would prefer to sign. I would ask for your review prior to signature.

Please let me know if you need additional information,
Toni

From: Phillips, John M - Transmission
To: Timberman,Toni L (BPA) - TSE-TPP-2
Subject: RE: PSANI Project Managers Meeting Notes
Date: Tuesday, March 18, 2014 5:04:14 PM

Hi Toni,
I have a call into Phil West but haven't heard anything back. I did talk to Booga and her expectation is that the meeting will focus on project updates. For PSE our project is growing in the public consciousness and it is likely SCL and BPA may get contacted about options they might have and I think she wanted to prepare them for that. Also, at the executive level, just make sure everyone is still headed in the same direction. I mentioned the proposed additional letter agreements and she didn't have any concerns.
I'll let you know if I hear anything else.
John

John Phillips
Manager of Transmission Contracts
Electric Transmission
Location: 355 110 Ave NE, Bellevue WA
Phone: (425) 462-3579

From: Timberman,Toni L (BPA) - TSE-TPP-2 [mailto:tltimberman@bpa.gov]
Sent: Thursday, March 13, 2014 2:16 PM
To: Phillips, John M - Transmission
Subject: FW: PSANI Project Managers Meeting Notes

From: Dorf, Angela [mailto:Angela.Dorf@hdrinc.com]
Sent: Thursday, March 13, 2014 11:57 AM
To: Siddiqi, Uzma (Uzma.Siddiqi@seattle.gov); leann.kostek@pse.com; Marleau,Michael L (BPA) - TEP-TPP-1; Tesema,Berhanu K (BPA) - TPP-OPP-3; Wilson,Jenny (BPA) - TPP-OPP-3; Cathcart,David A (BPA) - TPP-OPP-3; Timberman,Toni L (BPA) - TSE-TPP-2; Jusupovic,Jana D (BPA) - TPC-TPP-4
Cc: Ambrose, Philip; Ewry, Eleanor - Transmission; Strauch, Bradley R; Jackson II,Jerry L (BPA) - TPP-OPP-3; Duncan, Margaret
Subject: PSANI Project Managers Meeting Notes

Attached please find the notes from our meeting last month.

Thank you,

ANGELA DORF, PLS

HDR, Inc.
Project Manager

1001 SW 5th Ave. STE 1900 | Portland, OR 97204
c: 760.641.1551
angela.dorf@hdrinc.com | hdrengineering.com
Follow Us – Facebook | Twitter | YouTube

From:	Timberman,Toni L (BPA) - TSE-TPP-2
To:	"john.phillips@pse.com"
Subject:	FW: PSANI Project Managers Meeting Notes
Date:	Thursday, March 13, 2014 2:15:00 PM
Attachments:	02-24-13 PSANI Project Managers Meeting Notes.pdf

---

From: Dorf, Angela [mailto:Angela.Dorf@hdrinc.com]
Sent: Thursday, March 13, 2014 11:57 AM
To: Siddiqi, Uzma (Uzma.Siddiqi@seattle.gov); leann.kostek@pse.com; Marleau,Michael L (BPA) - TEP-TPP-1; Tesema,Berhanu K (BPA) - TPP-OPP-3; Wilson,Jenny (BPA) - TPP-OPP-3; Cathcart,David A (BPA) - TPP-OPP-3; Timberman,Toni L (BPA) - TSE-TPP-2; Jusupovic,Jana D (BPA) - TPC-TPP-4
Cc: Ambrose, Philip; Ewry, Eleanor - Transmission; Strauch, Bradley R; Jackson II,Jerry L (BPA) - TPP-OPP-3; Duncan, Margaret
Subject: PSANI Project Managers Meeting Notes

Attached please find the notes from our meeting last month.

Thank you,

ANGELA DORF, PLS

HDR, Inc.
Project Manager

1001 SW 5th Ave. STE 1900 | Portland, OR 97204
c: 760.641.1551
angela.dorf@hdrinc.com | hdrengineering.com
Follow Us – Facebook | Twitter | YouTube

PSANI Project

Project Managers Meeting Notes

February 24, 2013 @ 10:00AM

Attendees:

Name:	Organization	Role	Contact Info:
Mike Marleau	BPA	Project Manager	mlmarleau@bpa.gov
Angela Dorf	HDR	Assistant Project Manager	angela.dorf@hdrinc.com
Berhanu Tesema	BPA	Transmission Planner	bktesema@bpa.gov
Jenny Wilson	BPA	Coordinating Engineer	jlwilson@bpa.gov
Jerry Jackson	BPA		jljackson@bpa.gov
Jana Jusupovic	BPA	Customer Service Engineering	jdjusupovic@bpa.gov
Toni Timberman	BPA	Customer Account Executive	tltimberman@bpa.gov
David Cathcart	BPA	Planning Engineer	dacathcart@bpa.gov
Uzma Siddiqi	Seattle City Light (SCL)	Principal Systems Engineer	Uzma.siddiqi@seattle.gov
Philip Ambrose	Seattle City Light (SCL)	Sr. Project Manager	Philip.ambrose@seattle.gov
Bob Risch	Seattle City Light (SCL)	Transmission Engineer	Bob risch@seattle.gov
Leann Kostek	Puget Sound Energy (PSE)	Project Manager	leann.kostek@pse.com
Brad Strauch	Puget Sound Energy (PSE)		bradley.strauch@pse.com
Eleanor Ewry	Puget Sound Energy (PSE)	Transmission	Eleanor.Ewry@pse.com

- SnoKing-Bothell No.1 & No.2 230kV Lines
  - BPA has made the decision to rebuild the SnoKing – Bothell No. 1 and 2 Lines. The BPA has run through the three options for the SnoKing–Bothell 230kV lines (1&2) and it makes sense for us to rebuild those ½ mile sections with 11 engineered steel structures and conventional AAC Jefferson conductor. Our initial estimate is $1.1million (not including changing out the disconnect switches inside SnoKing Substation). This design provides us with the following ratings (2400AWinter, 1970A Summer). This meets the minimum required current rating for winter and summer. The SnoKing Substation disconnect switches will be rated at 3000A.
  - The cost sharing arrangement outlined in the MOA seems very flexible. BPA is proposing to pay the costs for the SnoKing –Bothell Lines 1 & 2 rebuild instead of including them in the 1/3 cost sharing arrangement with PSE and SCL.
  - BPAs' Legal Counsel and Environmental group has determined that each of the projects identified in the MOA have stand-alone benefits and as such, the environmental review for each of the projects may take place separately. This will allow us to move forward with the environmental review of individual projects.
- SCL Project Updates and Schedules

PSANI Project

Project Managers Meeting Notes

- Series Inductor Project for Denny is at a 60% design
- Series Inductor Project for Broad Street is due to start design in July 2014.
- Reconductor Project will start preliminary engineering this year

- PSE Project Updates and Schedules
  - Community Engagement Announcement was December 4, 2013. PSE is looking at having a preliminary alignment solutions by end of this year, with a submittal in 2015 and permitting in 2017
- BPA Project Updates and Schedules
  - Raver and Covington Substations will have 90% Design Issue in July 2014, IFC in October 2014, with construction in April 2015. This work includes storm water management, yard expansion, line reterminations, equipment replacement and new ring bus.
  - RAS projects will be starting next year; Design 2015-2017 with installation 2016-2017. Project involves upgrades at two control centers and seven sites, one site being a BC Hydro site.

- Action item list:
  - Mike will work with Jana and Toni to prepare a draft of the Letters of Agreement. Hope to have this sent to both SCL and PSE by end of March.
  - Mike to follow up with Justin Moffett to see if we can separate the SCL and BPA NEPA documents for SnoKing-Bothell Lines 1 & 2.
  - Uzma will host the next PM meeting in September.
  - BPA and SCL technical team will meet early April to review project details for the Bothell-SnoKing project. Angela will send Uzma and Philip a few dates for this meeting. Possible site visit after meeting.

From: Timberman,Toni L (BPA) - TSE-TPP-2
To: Jusupovic,Jana D (BPA) - TPC-TPP-4
Subject: talked to Hardev
Date: Friday, March 21, 2014 11:34:00 AM

Hi Jana,
I ran into Hardev at Dittmer this morning. I had typed up a summary of where we are with the PSANI projects, for his meeting with SCL and Puget VPs on Monday. When discussing the payments, and that we had decided on progress payments, he said he would need $$ to put in his IPR for the rate case. I told him you have that information – hope that was correct.
Toni

From:	Jusupovic,Jana D (BPA) - TPC-TPP-4
To:	Juj,Hardev S (BPA) - TP-DITT-2; Hargin,Cheryl D (BPA) - FS-MODD; Hunter,Kathy D (BPA) - TPW-TPP-4
Cc:	Timberman,Toni L (BPA) - TSE-TPP-2; Johnson,Kelly G (BPA) - TPC-TPP-4; Marleau,Michael L (BPA) - TEP-TPP-1
Subject:	Funding for PSANI
Date:	Friday, March 21, 2014 12:11:19 PM
Attachments:	RE PSANI.msg

Hi Hardev,

Toni is correct; I've been working with Kathy and Cheryl regarding the expense funding for PSANI. As of right now I have requested the following in expense funds:

FY16: $1M
FY17: $10M
Total: $11M

I've attached my emails with Kathy and Cheryl stating, PSANI is currently in the proposed budget.

Kathy and Cheryl, if you have any more details to add please do…

I hope this helps!

Jana

From: Timberman,Toni L (BPA) - TSE-TPP-2
Sent: Friday, March 21, 2014 11:34 AM
To: Jusupovic,Jana D (BPA) - TPC-TPP-4
Subject: talked to Hardev

Hi Jana,
I ran into Hardev at Dittmer this morning. I had typed up a summary of where we are with the PSANI projects, for his meeting with SCL and Puget VPs on Monday. When discussing the payments, and that we had decided on progress payments, he said he would need $$ to put in his IPR for the rate case. I told him you have that information – hope that was correct.
Toni

From: Hargin,Cheryl D (BPA) - FS-MODD
To: Jusupovic,Jana D (BPA) - TPC-TPP-4
Cc: Hunter,Kathy D (BPA) - TPW-TPP-4; Marleau,Michael L (BPA) - TEP-TPP-1
Subject: RE: PSANI
Date: Monday, March 03, 2014 8:01:44 AM

It helped to explain this budget requirement and is currently in the proposed budget.

From: Jusupovic,Jana D (BPA) - TPC-TPP-4
Sent: Monday, February 24, 2014 4:06 PM
To: Hargin,Cheryl D (BPA) - FS-MODD
Cc: Hunter,Kathy D (BPA) - FBT-MODD; Marleau,Michael L (BPA) - TEP-TPP-1
Subject: RE: PSANI

Hi Cheryl,

Just checking in on how your "elevator" speech went? ☺

From: Jusupovic,Jana D (BPA) - TPC-TPP-4
Sent: Thursday, February 20, 2014 4:08 PM
To: Hargin,Cheryl D (BPA) - FS-MODD
Cc: Hunter,Kathy D (BPA) - FBT-MODD
Subject: RE: PSANI

Hi Cheryl,

The summary below looks good, I just made a minor edit.
I left you a voicemail trying to explain my edit…

BPA's team decided during their study efforts in the PSANI area that the Maple Valley to SnoKing Reconductoring Project was the best way to minimize the number and likelihood of curtailments In the PSANI area. The reconductoring project was estimated to cost $16.1M

However, <u>both</u> Seattle City Light and Puget Sound both disagreed and decided that the "Puget Preferred Plan Projects" negated the need for the construction of the Maple Valley to SnoKing Reconductoring project. The total estimated cost for the Puget Preferred Plan projects are $67M.

With that decision, BPA stated, since our studies only required the Maple Valley Reconductoring project to solve this problem, we will only pay 1/3 of the $16.1M, not 1/3 of the $67M required to completed the Puget Preferred plan projects.

I hope that better explains the project…

Give me a call if you have any further questions!

From: Hargin,Cheryl D (BPA) - FS-MODD
Sent: Thursday, February 20, 2014 1:44 PM
To: Jusupovic,Jana D (BPA) - TPC-TPP-4
Cc: Hunter,Kathy D (BPA) - FBT-MODD
Subject: RE: PSANI
Importance: High

Hi Jana,
I'm preparing the elevator speech for this. Does this sound right?

- Because of the need to minimize the number and likelihood of curtailments to firm transmission deliveries in the PSANI area (the most dense load center on BPA's system), BPA has agreed to fund 1/3 of the total costs for SCL and Puget to upgrade their transmission systems.
- This project has both capital and expense portions:
  Capital – BPA will install RAS and install a 500 kV Transformer in the Seattle vicinity.
  Expense - BPA will pay SCL and Puget Sound for their reconductoring and rebuild projects.
  ~~for reconductoring and inductoring projects.~~ Since we are not owning the assets but are paying for their capital projects in lieu of us having to do a capital build we are not able to capitalize these costs.

You are right – this is complicated! Glad to see you are on top of it.
Cheryl

From: Hunter,Kathy D (BPA) - FBT-MODD
Sent: Thursday, February 20, 2014 8:49 AM
To: Hargin,Cheryl D (BPA) - FS-MODD
Subject: FW: PSANI

From: Jusupovic,Jana D (BPA) - TPC-TPP-4
Sent: Tuesday, February 18, 2014 4:12 PM
To: Hunter,Kathy D (BPA) - FBT-MODD
Subject: RE: PSANI

Great questions Kathy, the only agreement in place as of today is the one I just sent you earlier.
It defines the project in its entirety and there's no other agreements related to it at this time.

As for the Background and Benefits of this project, I included the following in the Business Case:

The Puget Sound Area and Northern Intertie (PSANI) area is located in northwest Washington, is the largest and most dense load center on the BPA system; and includes a complex interconnection with multiple transmission owners/operators. The Northern Intertie path consists of two BPA 500kV Westside circuits, Custer-Ingledow #1 and #2 (Westside Northern Intertie); and two 230kV eastside circuits, Boundary-Nelway and Boundary-Waneta (Eastside Northern Intertie). The references to the Northern Intertie herein are primarily to the Westside Northern Intertie. The largest BPA customers in the area include Puget Sound Energy, Snohomish PUD, Seattle City Light, Tacoma Power Utilities, ALCOA-Intalco, and deliveries to British Columbia Hydro. Including Canadian Entitlement exports (up to 1500MW, allocated 11/14 to the Westside NI), the simultaneous winter peak load in the PSANI area is roughly 10,000MW and is growing at approximately 1.0% per year. The PSANI firm load service obligation is supplemented by local, customer-owned thermal and hydro generation facilities owned by SCL, SNOPUD and PSE. It is also served by Federal Hydro Projects and Eastern Oregon/Washington Wind plants via the West of Cascades North (WOCN) path.

The Puget Sound Area is a highly interconnected and complicated system with varied transmission ownership/operation (PSE, SCL, SPUD, TPU, and BPA, BC Hydro). Currently, area congestion is mitigated using complicated operational nomograms for the Northern Intertie path, a PSANI redispatch program, a curtailment calculator that reduces PSANI schedules in and through the area; and congestion mitigation tools limited to Northern Intertie users only. Redispatch and curtailment events are usually triggered by outage conditions on one or more of the interconnected PSANI systems, usually during peak load periods. These mitigation events can be expensive for BPA customers in the area. It may require ramping expensive local thermal generation in order to maintain firm load obligations or acquiring power from sources north of the area. Depending upon the year, there can be up to 15 events in a single year that require some form of OSG Redispatch or NI curtailment.

The need for this project is thus driven primarily by the goal to minimize the number and likelihood of curtailments to firm transmission deliveries in and through the PSANI area and 1) meet firm obligations for Canadian Entitlement Return, and 2) maintain reliable firm load obligations for the greater Puget Sound Area. Columbia Grid facilitated a PSANI Study Team comprising of BPA, PowerEx, PSE, SCL, SPUD and TPU to develop a long term plan to minimize PSANI Curtailment Events. The stated goal of the study team was to develop a project that minimized PSANI firm Curtailments while maintaining Canadian Entitlement return and reliable load service. The metrics used for evaluating the projects were a new Transmission Curtailment Risk Measure (TCRM) and Total Transfer Capability (TTC) on the Northern Intertie, as well as preliminary cost comparisons and project feasibility. TCRM measures the interconnected system performance for outage conditions, and TTC measures performance for standard NERC/WECC all-lines-in-service conditions. These methods are explained in detail in the 2011 Columbia Grid PSAST Recommended Transmission Expansion Plan report.

The 2010 NOS Cluster Study identified the same PSANI projects to address limitations for the South-to-North transfer direction, because S-N implies return of the Canadian Entitlement. The limitations

associated with North-to-South transfers were identified as separate projects. The projects identified in the 2010 NOS also serve to support the PSANI long range (10-20 year) plan of service.

From: Hunter,Kathy D (BPA) - FBT-MODD
Sent: Tuesday, February 18, 2014 4:00 PM
To: Jusupovic,Jana D (BPA) - TPC-TPP-4
Subject: RE: PSANI

Okay, thanks Jana!

So we are upgrading City of Seattle and PSE "their transmission system", we have to pay the $11M. Also, I assume there is an agreement in place, yes?

Also, what is the benefit of us doing this? Folks are going to be speaking to this in the next process (which is now) and the dollars are significant in general. And, we don't have a work order or program in which this will be processed. In other words, how do we pay these in 2016 and 2017!

k

From: Jusupovic,Jana D (BPA) - TPC-TPP-4
Sent: Tuesday, February 18, 2014 2:34 PM
To: Hunter,Kathy D (BPA) - FBT-MODD
Subject: RE: PSANI
Importance: High

Because BPA is funding the third of the total costs for the City of Seattle and Puget Sound Energy to upgrade their own transmission systems.

This agreement is very confusing, so please feel free to ask any more questions!

<u>Here is the exact breakdown of the entire project according to Capital vs. Expense costs:</u>

(A) BPA Preferred Plan Projects (Capital Portion)

1. South Seattle 500 kV Transformer Addition project; Completion 2017; Capital Cost $56.2 M
2. Northern Intertie RAS Improvement Project; Completion 2014; Capital Cost $4 M

(B) Puget Preferred Plan Projects (No cost to BPA)

1. Sammamish to Lakeside to Talbot Rebuild Project; Completion 2017; Capital Cost $45 M
2. Lakeside 230 kV Transformer Addition Project; Completion 2017; Capital Cost $22 M

(C) Seattle Light Preferred Plan Projects (BPA Expense: $5.4 M)

1. Bothell to Sno-King Reconductoring Project; Completion 2017; Capital Cost $2.5 M
2. Broad Street Inductor Project; Completion 2017; Capital Cost $7.3 M
3. North Downtown Inductor Project; Completion 2017; Capital Cost $4.4 M
4. Delridge to Duwamish Reconductoring Project; Completion 2016; Capital Cost $1.9 M

(D) Preferred Plan Project Not Planned for Construction Based On the Construction of the Puget Plan Projects (BPA Expense: $5.3 M)

1. Each Party Acknowledges that the construction of the Puget Preferred Plan Projects negated the need for the construction of the Maple Valley to SnoKing Reconductoring. Maple Valley to SnoKing Reconductoring Project, Completion 2017, Capital Cost $16.1 M

From: Hunter,Kathy D (BPA) - FBT-MODD
Sent: Tuesday, February 18, 2014 2:14 PM
To: Jusupovic,Jana D (BPA) - TPC-TPP-4
Subject: RE: PSANI

Thanks Jana

Why is the $11M (FY16 $1M and FY17 $10M) expensed?

k

From: Jusupovic,Jana D (BPA) - TPC-TPP-4
Sent: Tuesday, February 18, 2014 1:59 PM
To: Hunter,Kathy D (BPA) - FBT-MODD
Subject: RE: PSANI

Here you go,

If you have any questions regarding the contract, let me know! ☺

From: Hunter,Kathy D (BPA) - FBT-MODD
Sent: Tuesday, February 18, 2014 1:06 PM
To: Jusupovic,Jana D (BPA) - TPC-TPP-4
Subject: PSANI

HI Jana

Do you have the contract file for Psani, we are getting some questions on this for clarity.

From:	Timberman,Toni L (BPA) - TSE-TPP-2
To:	Egusa,Sean R (CONTR) - TSP-TPP-2
Subject:	RE: Puget sound area upgrades - PSAST
Date:	Tuesday, June 10, 2014 4:34:00 PM
Attachments:	image001.png

I will send you the schedule I have on Thursday.

From: Egusa,Sean R (CONTR) - TSP-TPP-2
Sent: Tuesday, June 10, 2014 4:08 PM
To: Rochelle,Patrick R (BPA) - TPP-OPP-3; Jones,Ryan M (BPA) - TPP-OPP-3; Timberman,Toni L (BPA) - TSE-TPP-2; Kohne,Kyle R (BPA) - TPP-OPP-3
Subject: FW: Puget sound area upgrades - PSAST

Here you go, from Michael…

Sean

From: Jones,Christopher M (BPA) - TSPQ-TPP-2
Sent: Friday, June 06, 2014 9:39 AM
To: Egusa,Sean R (CONTR) - TSP-TPP-2
Subject: FW: Puget sound area upgrades - PSAST

From: Scott,Brian M (BPA) - TEP-TPP-1
Sent: Friday, February 14, 2014 12:22 PM
To: Jones,Christopher M (BPA) - TSP-TPP-2
Subject: RE: Puget sound area upgrades - PSAST

Glad to help, have a great weekend!

From: Jones,Christopher M (BPA) - TSP-TPP-2
Sent: Friday, February 14, 2014 12:21 PM
To: Scott,Brian M (BPA) - TEP-TPP-1
Subject: Re: Puget sound area upgrades - PSAST

Thanks Brian for this info!

From: Scott,Brian M (BPA) - TEP-TPP-1
Sent: Friday, February 14, 2014 12:19 PM
To: Egusa,Sean R (CONTR) - TSP-TPP-2; Timberman,Toni L (BPA) - TSE-TPP-2; Nichols-Kinas,Lauren (BPA) - TSP-TPP-2; Jones,Christopher M (BPA) - TSP-TPP-2; Christen,Camille A (BPA) - TSP-TPP-2
Cc: Marleau,Michael L (BPA) - TEP-TPP-1; Sinha,Amit (BPA) - TEP-TPP-1
Subject: FW: Puget sound area upgrades - PSAST

All,

Mike put together a great overview of the various parts of the project and current schedules. Hope this helps! Thanks Mike!

Brian

From: Marleau,Michael L (BPA) - TEP-TPP-1
Sent: Friday, February 14, 2014 11:52 AM
To: Scott,Brian M (BPA) - TEP-TPP-1
Cc: Sinha,Amit (BPA) - TEP-TPP-1
Subject: RE: Puget sound area upgrades - PSAST

Brian,

BPA is coordinating with Seattle City Light, Puget Sound Energy, and BC Hydro on line ratings, schedules, scope, environmental review, and costs. Since the MOA is a very high level document, we've made some adjustments during the course of the project as we've developed the detailed design. We have updated the Project Requirements Diagrams (PRDs) during the project so they would reflect the current scope better than the MOA.

The link to the project Sharepoint site is below:

http://internal.bpa.gov/sites/t-proj-mgmnt/OfficialProjectWorkspaceSite/P00094/Pages/Home.aspx

It has tabs to various parts of the project (e.g., Raver, Covington, Transmission Lines, RAS, Sno King-Bothell, and Foreign Utility Coordination).

For the BPA portion of the project, the general schedule is as follows:

Raver and Covington Substation and Lines

Design Issue:	10/1/2014
Construction Start:	4/1/2015
In Service:	10/15/2015

Sno King Substation and Sno King-Bothell 230kV Lines (1&2)

Design Issue:	4/15/15
Construction Start:	1/15/16
In Service:	7/1/16

Remedial Action Schemes (RAS) For the RAS projects, we're still bundling with other projects for the affected sites. We're also coordinating with BC Hydro for the Ingeldow interconnection.
Design FY15
Construction FY16 and FY17

Let me know if you need anything else.

Thanks,
Mike

From: Timberman,Toni L (BPA) - TSE-TPP-2
Sent: Friday, February 14, 2014 09:52 AM
To: Egusa,Sean R (CONTR) - TSP-TPP-2; Scott,Brian M (BPA) - TEP-TPP-1
Cc: Nichols-Kinas,Lauren (BPA) - TSP-TPP-2; Jones,Christopher M (BPA) - TSP-TPP-2; Christen,Camille A (BPA) - TSP-TPP-2
Subject: RE: Puget sound area upgrades - PSAST

We are actively working with SCL and Puget on these. All projects are moving forward, although they may be a bit different than what is described in the MOA, and the schedule might have been tweaked on some projects.

From: Egusa,Sean R (CONTR) - TSP-TPP-2
Sent: Friday, February 14, 2014 9:50 AM
To: Timberman,Toni L (BPA) - TSE-TPP-2; Scott,Brian M (BPA) - TEP-TPP-1
Cc: Nichols-Kinas,Lauren (BPA) - TSP-TPP-2; Jones,Christopher M (BPA) - TSP-TPP-2; Christen,Camille A (BPA) - TSP-TPP-2
Subject: Puget sound area upgrades - PSAST
Importance: High

Toni and Brian,

In working with planning on this year's NOS cluster study, one of the assumptions is that the fixes identified in the PSAST initiative out of Columbia Grid are moving forward.

My question, do either of you know the status???

Brian, I note in your monthly CAB update that lines 23 and 24 specifically refer to the PSANI MOA and I'm wondering if these are part of the PSAST package for those facilities that BPA is responsible for???

Here is the language from the 2010 cluster study describing the PSAST fixes identified for PSANI:

1.1.1 Puget Sound Area Northern Intertie (PSANI)

A Columbia Grid sponsored Puget Sound Area Study Team (PSAST) has completed a technical report proposing projects to reduce the risk of PSANI events, curtailments or generation re-dispatches

required for system operating limits. Maintaining a 1,500 MW south to north system operating limit for a wide range of conditions was a primary focus. The projects identified by the PSAST are listed in the Table 2.1 below.

Project Description	**Projected Energization Date**
(1) Expansion of Northern Intertie RAS	2012
(2) Install series inductors on Seattle City Light 115 kV Cables	2013
(3) Rebuild the Bothell – Snoking 230 kV lines	2013
(4) Reconductor the Maple Valley – Snoking 230 kV lines with high temperature conductor	2015
(5) Add a third 500/230 kV transformer at Covington Substation	2015
(6) Add a second Portal Way 230/115 kV transformer	2015

Table 2.1 Puget Sound Area Northern Intertie (PSANI) Projects

The projected energization dates are taken directly from the PSAST report, "Transmission Expansion Plan for the Puget Sound Area", completed on October 20, 2010.

These projects have been identified by the PSAST to reduce the risk of PSANI events and address existing system bottlenecks that show up for different operating conditions, prior to granting any new TSRs. The final plan of service may not be reflected in the project descriptions above pending agreement between participating entities in the PSAST. In regards to the NOS 2010 Northern Intertie south to north and north to south TSRs, PSAST reinforcements (2), (3), and (4) are required for Northern Intertie south to north, while (6) is required for Northern Intertie north to south. These projects address existing system limitations that are impacted by the new TSRs. Therefore, it is necessary to address these bottlenecks before the new service is provided.

Reinforcements (1) and (5) are not critical for NOS 2010 TSRs. Reinforcement (1) provides operational flexibility for outages of the Chief Joseph – Monroe 500 kV line and Monroe – Echo Lake 500 kV line and reinforcement (5) is required primarily to serve load growth in the Puget Sound Area (PSA).

The next steps for the PSAST utilities is to finalize the plan of service, determine cost allocation, capacity rights, ownership, and construction responsibility. These projects are recognized as under development to maintain existing system reliability and obligations for the PSA utilities. For that reason they are not included in the 2010 NOS projects for financial analysis, but new TSRs will not be approved without the completion of the reinforcements for existing needs.

Cheers,

Sean

1. 1-5 Corridor Reinforcement (NEPA) (TFY090337)
2. Little Goose Area Reinforcement (TFY110143)
3. Big Eddy-Knight 500kV Line (TFY110214)
4. RAS DC Upgrade CCGO (TFY090229)
5. IRIC Sonet Project Continuation Phase II (TFY090110)
6. MW Analog Replacement IRIC00 (TFY090107)
7. Steel Lines Sustain Program FY14-15 (TFY110113)
8. System Protection & Control Sustain Program FY14-15 (TFY110086, TFY110088, TFY110089, TFY110092, TFY110095)
9. Wood Pole Transmission Line Sustain Program FY 14-15 (TFY100241 & TFY100242)
10. Synchrophasor Project (TFY100416)
11. Alvey Substation 500kV Shunt Reactor Addition (TFY100145)
12. 500 kV Spare Transformer Procurement (TFY090242)
13. Line Steel Hardware Repl. (Spacer Damper) (TFY080200)
14. Control Replacement - CGI Series Capacitors (TFY110153)
15. Ross - Schultz Fiber (TFY110012)
16. DC analog Spur Replacements and Sonet Ring (TFY110006)
17. Sustain Steel Defective Spacer Replacement (TFY120107)
18. ROW Access Roads & Land Rights Acquisition (TFY120608, TFY120602, TFY120609, TFY120603, TFY120602, TFY120603)
19. P25 TWO-Way Radio Upgrade (TFY120047)
20. Switchgear Replacement (TFY120006, TFY120007, TFY120012)
21. Horse Butte Wind Project (TFY110158)
22. Montana to Washington Transmission System Upgrade TFY124062
23. PSAM MOA (TFY130641) - Transformer addition
24. PSAM MOA (TFY130641) -RAS improvements
25. AC Substations Sustain Program FY13-15 (TFY130622, TFY130429, TFY130630, TFY130635, TFY130426, & TFY130631)
26. IRIC Microwave Upgrade (TFY130644)
27. PSC Sustain Program FY13-FY15 (TFY130230, TFY130231, TFY130232, TFY130233, TFY130428, & TFY130639)
28. Operational Multi-Gigabit Ethernet Transport (TFY120046)
29. Pacific DC Intertie Upgrade - Station Work (TFY110219)
30. Pacific DC Intertie Upgrade - Line Work (TFY110219)
31. Lower Valley Reinforcement (TFY100408, T00001641, T00004744)
32. UEC Line and Load Requests (T50140118)
33. Raver Shunt Reactor
34. Paul Substation Shunt Reactor
35. McNary Substation - Add 500/230 kV Transformer (T50140032)
36. Fleet Mobile Equipment Replacement FY14-16 (TFY090231)
37. Control House Upgrades (T50141161)

From: Phillips, John M - Transmission
To: Timberman,Toni L (BPA) - TSE-TPP-2
Subject: RE: Eastside project
Date: Wednesday, July 16, 2014 1:28:06 PM

I'll check.

From: Timberman,Toni L (BPA) - TSE-TPP-2 [mailto:tltimberman@bpa.gov]
Sent: Wednesday, July 16, 2014 11:45 AM
To: Phillips, John M - Transmission
Subject: Eastside project

Hi John,
You had told me that BPA environmental staff was discussing the Eastside Project with Puget. I asked and cannot find anyone who knows about this. Do you know who at BPA was in contact with Puget? I believe this was related to BPA funding a portion of that project.
Thanks,
Toni

From: Moffett,Justin T (BPA) - KEC-4
To: Marleau,Michael L (BPA) - TEP-TPP-1
Cc: Adams,Hub V (BPA) - LN-7; Timberman,Toni L (BPA) - TSE-TPP-2
Subject: FW: PSE "Eastside" project
Date: Wednesday, July 16, 2014 2:27:16 PM
Attachments: PSANI MOA scope change letter agreement.doc
11TX-15450_CT_PDF.pdf

Mike,
I received the email below from Toni Timberman via my manager this afternoon. It looks like Toni Timberman is working on an amendment to the project scope in the PSANI MOA- which based on our recent meeting with Hub, is what I thought you were doing. Are you aware of this? I don't see your name on the scope change letter agreement she drafted (see attached) so I thought I should pull you into the loop incase we're duplicating efforts. Let me know if there is anything I can do to help.
Thanks.

Justin T. Moffett, PWS
Environmental Protection Specialist | KEC-4
BONNEVILLE POWER ADMINISTRATION
bpa.gov | P 503-230-3233 | C 503-758-2088

From: Lynard,Gene P (BPA) - KEC-4
Sent: Wednesday, July 16, 2014 12:09 PM
To: Moffett,Justin T (BPA) - KEC-4
Subject: FW: PSE "Eastside" project

fyi

From: Timberman,Toni L (BPA) - TSE-TPP-2
Sent: Wednesday, July 16, 2014 12:06 PM
To: Lynard,Gene P (BPA) - KEC-4
Subject: RE: PSE "Eastside" project

There is another issue to be resolved.

Seattle would like something from BPA saying that the projects under the PSANI MOA are separate for NEPA / SEPA purposes. Is this something we can do?

I have attached the MOA for your information. I also attached the letter agreement I am drafting describing the project scope changes under the MOA.

Thanks,
Toni

From: Lynard,Gene P (BPA) - KEC-4
Sent: Wednesday, July 16, 2014 11:16 AM
To: St Hilaire,Kimberly R (BPA) - KEC-4
Cc: Timberman,Toni L (BPA) - TSE-TPP-2
Subject: RE: PSE "Eastside" project

Not familiar with the Eastside project. If we knew the question we would be happy to assist in providing the answer.

From: St Hilaire,Kimberly R (BPA) - KEC-4
Sent: Wednesday, July 16, 2014 11:07 AM
To: Lynard,Gene P (BPA) - KEC-4; Timberman,Toni L (BPA) - TSE-TPP-2
Subject: FW: PSE "Eastside" project

Hi Toni,
I'm not sure, but Gene would know.
Kimberly

From: Timberman,Toni L (BPA) - TSE-TPP-2
Sent: Wednesday, July 16, 2014 11:02 AM
To: St Hilaire,Kimberly R (BPA) - KEC-4
Subject: PSE "Eastside" project

Hi Kimberly,

BPA and Puget have been discussing Puget's proposed "Eastside" project, which is a new transmission line and substation. (b) (5) [redacted]

Last week Puget told me that someone on the BPA environmental staff had been discussing this project with Puget staff. Do you know who that was? My contact at Puget asked me to touch base with that BPA person.

Thanks,
Toni

Department of Energy

Bonneville Power Administration
P.O. Box 61409
Vancouver, WA 98666-1409

TRANSMISSION SERVICES

July 3, 2014

In reply refer to: TSE/TPP-2

Contract No. 14TX - zzzzz
Letter Agreement

Ms. Booga Gilbertson
Senior Supervisor, T&D System Planning
Puget Sound Energy, Inc.

Bellevue, WA 98vvv

Mr. Phillip West

City of Seattle, City Light Department

Seattle, WA 98xxx

Dear Ms. Gilbertson and Mr. West:

The Bonneville Power Administration (BPA), the City of Seattle, City Light Department (SCL) and Puget Sound Energy, Inc. (PSE) are parties to the Memorandum of Agreement (MOA), Contract No. 11TX-15450, relating to the Preferred Puget Sound Area Plan of Service Projects and Cost Allocation. The parties to the MOA are currently in the initial stages of development of the projects described in the MOA. As this has progressed certain aspects of the MOA were identified that the parties believe need to be clarified.

This Letter Agreement is intended to clarify the scope changes related to the Covington 500 kV Transformer Addition Project described in section 3.(a) of the MOA and the Bothell to SnoKing Reconductor Project described in section 3. (c) of the MOA.

BPA's transformer addition originally planned for Covington substation has been moved to Raver substation. There is no change in financial responsibility under the MOA due to this relocation.

The Bothell to SnoKing Reconductor Project was identified in the MOA as an SCL project. However, during subsequent discussions it was discovered that BPA owns the first ½ mile of these lines on the SnoKing end. BPA will rebuild its owned portion of these lines at its cost, including any necessary replacement of equipment within SnoKing substation associated with these lines.

DRAFT

Please sign all three originals of this Agreement where indicated, returning two originals to one of the addresses listed below. The remaining original is for your records. BPA will ensure that SCL and Puget have a full set of original signature pages.

In order to meet the project schedule, the executed Agreement must be received by close of business (COB) August 1, 2014. If BPA does not receive the executed Agreement by COB August 1, 2014, this offer will be considered withdrawn.

First Class Mail
U.S. Department of Energy
Bonneville Power Administration
ATTN: Tonya Van Cleave - TPCC/TPP-4
P.O. Box 61409
Vancouver, WA 98666

Overnight Delivery Service
U.S. Department of Energy
Bonneville Power Administration
ATTN: Tonya Van Cleave - TPCC/TPP-4
7500 NE 41st Street, Suite 130
Vancouver, WA 98662
Phone: (360) 619-6050

If you have any questions concerning this agreement, please contact me at (360) 619-6015.

Sincerely,

Toni L. Timberman
Senior Transmission Account Executive
Transmission Sales

ACCEPTED

TACOMA POWER

By: _____

Name: _____
(Print/Type)

Title: _____

Date: _____

ACCEPTED

PUGET SOUND ENERGY

By:

DRAFT

bcc:
R. Shier – FRG-2
P. Walters – FRG-2
B. Bennett – LT-7
C. Hamel – TEP/TPP-1
S. Kannan – TFB/DOB-1
J. Jusupovic – TPC/TPP-4
D. Sauer – TPCC/TPP-4
T. Van Cleave – TPCC/TPP-4
J. Brank – TPCV/OLYMPIA
P. Fiedler – TPCV/TPP-4
T. Timberman – TSE/TPP-2
P. Gibson – TSES/TPP-2
Customer File – TPC/TPP-4 (ED-21-11/Tacoma Power)
Customer File – TSE/TPP-2 (TM-11/Tacoma Power)
PWA File – TPC/TPP-4 (N0310/Latest Status)
Official File – CCM_Support (Agreement 14TP-10657)

DRAFT

Contract No. 11TX-15450

MEMORANUDUM OF AGREEMENT

executed by the

UNITED STATES OF AMERICA

DEPARTMENT OF ENERGY

acting by and through the

BONNEVILLE POWER ADMINISTRATION

and

THE CITY OF SEATTLE

acting by and through its

CITY LIGHT DEPARTMENT

and

PUGET SOUND ENERGY, INC.

(Relating to the Preferred Puget Sound Area Plan of Service Projects and Cost Allocation)

This MEMORANDUM OF AGREEMENT (MOA) is executed by the UNITED STATES OF AMERICA, Department of Energy, acting by and through the BONNEVILLE POWER ADMINISTRATION (BPA), THE CITY OF SEATTLE, acting by and through its CITY LIGHT DEPARTMENT (Seattle City Light), and PUGET SOUND ENERGY INC. (Puget). BPA, Seattle City Light, and Puget are sometimes referred to individually as "Party" and collectively as "Parties".

WHEREAS, BPA owns and is responsible for the reliable operation of the Federal Columbia River Transmission System (FCRTS),

WHEREAS, Seattle City Light and Puget each own and operate electric systems that are interconnected with the FCRTS in the Puget Sound Area and electric power is delivered within those electric systems, and to or from them by BPA over the FCRTS,

WHEREAS, the Puget Sound Area experiences periods of transmission congestion that may require mitigation to maintain reliable operation of the Puget Sound Area Interconnection, including in some cases, curtailments of firm transmission service,

WHEREAS, as of February 2011, the Parties entered into Contract No. 11TX-15290, "Temporary Operational Support Program Agreement," that provides for voluntary changes in planned generation, including an increase in Puget Sound Area generation, as temporary and short-term measures for relieving forecasted transmission congestion conditions that are expected to adversely affect the reliable operation of the Puget Sound Area Interconnection,

WHEREAS, representatives from each of the Parties and other entities participated in regional studies to develop a long term plan, and implement a range of physical improvements to preserve the reliable operation of the Puget Sound Area interconnection, and reduce the need to curtail firm transmission service,

WHEREAS, the Parties have identified the projects described herein that, when taken as a whole, are expected to preserve the reliable operation of the Puget Sound Area Interconnection, and reduce the need to curtail firm transmission service; and it is in their individual and collective interests to continue to support the efforts needed to carry out these projects, and

WHEREAS, the transmission congestion affecting the Puget Sound Area interconnection is a shared problem, and the projects and cost sharing arrangements provided herein are appropriate.

NOW THEREFORE, in consideration of the mutual obligations and undertakings herein, the sufficiency of which is acknowledged, the Parties agree as follows:

1. DEFINITIONS

(a) "Bothell to SnoKing Reconductor Project" means the project identified in the Preferred Plan of Service in which Seattle City Light will reconductor the existing Bothell to SnoKing No. 1 and No. 2 230 kV lines with high-temperature conductor.

(b) "BPA Preferred Plan Projects" means, collectively, the Covington 500 kV Transformer Addition Project and the Northern Intertie Remedial Action Scheme ("RAS") Improvement Project.

(c) "Broad Street Inductor Project" means the project identified in the Preferred Plan of Service in which Seattle City Light will add series inductors (up to 10 ohm) to the Massachusetts-Broad Street 115 kV line.

(d) "ColumbiaGrid" means the Washington non-profit membership corporation formed to improve the operational efficiency, reliability, and planned expansion of the Pacific Northwest transmission grid, the

eight members of which, as of the Effective Date, are Avista Corporation; BPA; Public Utility District No. 1 of Chelan County, Washington; Public Utility District No. 2 of Grant County, Washington; Puget; Seattle City Light; Public Utility District No. 1 of Snohomish County, Washington; and Tacoma Power.

(e) "Covington 500 kV Transformer Addition Project" means the project identified in the Preferred Plan of Service in which BPA will install a third 500–230 kV transformer at the BPA Covington Substation.

(f) "Delridge to Duwamish Reconductor Project" means the project identified in the Preferred Plan of Service in which Seattle City Light will reconductor the existing Delridge to Duwamish 230 kV line with high-temperature conductor.

(g) "Lakeside 230 kV Transformer Addition Project" means the project identified in the Preferred Plan of Service in which Puget will install a 230–115 kV transformer at the Puget Lakeside Substation.

(h) "Maple Valley to SnoKing Reconductor Project" means the project identified in the Preferred Plan of Service in which Seattle City Light will reconductor the existing Maple Valley to SnoKing 230 kV line with high-temperature conductor.

(i) "North Downtown Inductor Project" means the project identified in the Preferred Plan of Service in which Seattle City Light will add series inductors (up to 10 ohm) to the East Pine-Broad Street line as part of Seattle City Light's North Downtown Substation Project.

(j) "Northern Intertie RAS Improvement Project" means the project identified in the Preferred Plan of Service in which BPA will install new software for and re-wire electrical protection devices on the Northern Intertie RAS.

(k) "Northern Intertie RAS" means the existing BPA pre-programmed set of automatic operating steps that are designed to protect the regional high voltage electric grid in the event of a loss of one of the two Custer-Monroe 500 kV lines.

(l) "Preferred Plan of Service" means the "Updated Recommended Transmission Expansion Plan for the Puget Sound Area to Support Winter South-to-North Transfers" approved by ColumbiaGrid on October 28, 2011, a copy of which is attached as Exhibit A to this MOA.

(m) "Preferred Plan Projects" means, collectively, the BPA Preferred Plan Projects, the Puget Preferred Plan Projects, and the Seattle City Light Preferred Plan Projects.

(n) "Puget Preferred Plan Projects" means the Sammamish to Lakeside to Talbot Rebuild Project and the Lakeside 230 kV Transformer Addition Project.

(o) "Sammamish to Lakeside to Talbot Rebuild Project" means the project identified in the Preferred Plan of Service in which Puget will upgrade Puget's existing Sammamish to Lakeside to Talbot 115 kV lines to 230 kV operation using Puget's existing Sammamish to Lakeside to Talbot utility corridor.

(p) "Seattle City Light Preferred Plan Projects" means the Bothell to SnoKing Reconductor Project, the Broad Street Inductor Project, the North Downtown Inductor Project, and the Delridge to Duwamish Reconductor Project.

2. TERM

The term of this MOA shall be effective on the date of execution by all Parties (Effective Date) and shall continue until the earliest to occur of the following: (i) the date of completion of the last of the Preferred Plan Projects; (ii) a Party terminates this MOA pursuant to section 5(c) of this MOA; or (iii) December 31, 2020.

3. PREFERRED PLAN OF SERVICE PROJECTED PROJECT COMPLETION SCHEDULE AND COST

(a) **BPA Preferred Plan Projects**. Each Party acknowledges that, as of the Effective Date, the projected project completions schedule and capital costs of the BPA Preferred Plan Projects are as follows:

BPA Preferred Plan Project	Projected Completion	Projected Capital Cost
1. Covington 500 kV Transformer Addition Project	2018	$56.2 million
2. Northern Intertie RAS Improvement Project	2014	$4.0 million

(b) **Puget Preferred Plan Projects.** Each Party acknowledges that, as of the Effective Date, the projected project completions schedule and capital costs of the Puget Preferred Plan Projects are as follows:

Puget Preferred Plan Project	Projected Completion	Projected Capital Cost
1. Sammamish to Lakeside to Talbot Rebuild Project	2017	$45.0 million (single circuit) or $41.3 million (double circuit)
2. Lakeside 230 kV Transformer Addition Project	2017	$22.0 million

(c) **Seattle City Light Preferred Plan Projects.** Each Party acknowledges that, as of the Effective Date, the projected project completions schedule and capital costs of the Seattle City Light Preferred Plan Projects are as follows:

Seattle City Light Preferred Plan Project	Projected Completion	Projected Capital Cost
1. Bothell to SnoKing Reconductor Project	2017	$2.5 million
2. Broad Street Inductor Project	2017	$7.3 million*
3. North Downtown Inductor Project	2017	$4.4 million*
4. Delridge to Duwamish Reconductor Project	2016	$1.9 million

(d) **Preferred Plan Project Not Planned for Construction Based On the Construction of the Puget Preferred Plan Projects.** Each Party acknowledges that, the construction of the Puget Preferred Plan Projects negates the need for the construction of the Maple Valley to

* The projected capital costs of the Broad Street Inductor Project and the North Downtown Inductor Project do not reflect any projected costs for land acquisition. As of the Effective Date, the Parties acknowledge that Seattle City Light may have to acquire land to accomplish the Broad Street Inductor Project, and the actual capital costs of the Broad Street Inductor Project will, if necessary, reflect the actual costs of land acquisition for such project. As of the Effective Date, the Parties do not anticipate that the North Downtown Inductor Project will require Seattle City Light to acquire any land.

SnoKing Reconductor Project. Each Party acknowledges that, as of the Effective Date, the projected project completions schedule and capital costs of the Maple Valley to SnoKing Reconductor Project are as follows:

Preferred Plan Project	Projected Completion	Projected Capital Cost
Maple Valley to SnoKing Reconductor Project	N/A	$16.1 million

4. PRELIMINARY CAPITAL COST ALLOCATION

As of the Effective Date of this MOA, the Parties agree to share in the capital costs of Preferred Plan Projects as follows:

(a) **BPA Preferred Plan Projects**. BPA shall pay the entire actual capital cost of each of (i) the Covington 500 kV Transformer Addition Project and (ii) the Northern Intertie RAS Improvement Project

(b) **Seattle City Light Preferred Plan Projects.** BPA, Puget, and Seattle City Light shall each pay one-third of the total actual capital cost of each of (i) the Bothell to SnoKing Reconductor Project; (ii) the Delridge to Duwamish Reconductor Project; (iii) the Broad Street Inductor Project; and (iv) the North Downtown Inductor Project.

(c) **Puget Preferred Plan Projects.** BPA and Seattle City Light shall each pay to Puget an amount equal to one-third of the adjusted projected capital cost of the Maple Valley to SnoKing Reconductor Project, which adjusted projected capital cost shall be determined as provided in the following table:

Projected Capital Cost of the Maple Valley to SnoKing Reconductor Project	=	$16.1 million * Cost Differences in Reconductor Projects

where:

Cost Differences in Reconductor Projects	=	the quotient of

(i) the sum of the actual capital costs of the Delridge to Duwamish Reconductor Project and Bothell to SnoKing Reconductor Project and

(ii) the sum of the projected capital costs of the Delridge to Duwamish Reconductor Project and Bothell to SnoKing Reconductor Project identified in section 3(c) above (i.e., $4.4 million)

5. FINAL CAPITAL COST ALLOCATION AND OPTION OF ELECTION TO CANCEL

(a) The allocations identified in section 4 are based on preliminary planning capital cost projections. The final capital cost allocation for the Seattle City Light Preferred Plan Projects shall be based on actual design and construction capital costs for each of the Seattle City Light Preferred Plan Projects, and the final capital cost allocation for the Puget Preferred Plan Projects shall be in accordance with the formula proscribed in section 4(a) above. The Parties shall review such actual design and construction capital costs and schedules and shall agree in writing to the final capital cost allocation.

(b) Each Party reserves the right to cancel any Preferred Plan Project for which such Party is the sponsor if such Party determines that

(i) the actual capital cost of such Preferred Plan Project is likely to exceed the projected capital cost of such Preferred Plan Project by a factor that is equal to or in excess of thirty percent (30%), or

(ii) the projected in-service date of the Preferred Plan Project will be more than twenty-four (24) months later than the projected completion date identified in section 3 above for such Preferred Plan Project.

If a Party elects to cancel a Preferred Plan Project for which such Party is a sponsor under this section 5(b), such Party shall provide written notice to such other Parties within five (5) days of such election. Within a reasonable period of time after receipt of such written notice, representatives of the Parties shall convene and identify alternative projects that the Parties expect will preserve the reliable operation of the Puget Sound Area Interconnection and reduce the need to curtail firm transmission service in a manner similar to the project cancelled pursuant to section 5(b). If the Parties cannot agree in good faith upon an alternative project to replace a project cancelled pursuant to section 5(b) within a reasonable period following receipt of written notice of

such termination, then any Party may terminate this MOA upon 90 days' written notice to the other Parties.

6. RESPONSIBILITY FOR ALL OTHER COSTS

(a) Each Party shall be solely responsible for the Preferred Plan Project for which such Party is the sponsor, less the contributions from the other Parties as provided in section 4. This MOA only affects the cost sharing for the Preferred Plan Projects.

(b) Each Party shall own the assets for the Preferred Plan Project for which such Party is the sponsor and shall be solely responsible for the operation and maintenance costs of such assets. Each Party shall be entitled to any capacity increases to its transmission system that results from any assets installed pursuant to this MOA.

(c) If any Party enhances a Preferred Plan Project after completion of such Preferred Plan Project to meet such Party's needs, the cost of such future enhancements shall be borne solely by such Party. Each Party shall attempt in good faith to coordinate with the other Parties with respect to any future enhancements to a Preferred Plan Project to minimize or eliminate any impact to the interconnected electric systems of such other Parties.

7. PAYMENT SCHEDULE

Payments will be made at the completion of individual projects. The Parties shall agree in writing to the method and schedule for the cost share contributions to be made under this MOA.

8. NATIONAL ENVIRONMENTAL POLICY ACT ASSESSMENT

To the extent that BPA's financial contributions under this MOA are determined to trigger the need for analysis of projects under the National Environmental Policy Act, the Parties shall coordinate such assessment.

9. JOINT COMMUNICATIONS

The Parties shall coordinate joint communications regarding presentations of the preferred plan of service to the public.

10. GENERAL PROVISIONS

(a) This MOA, including documents expressly incorporated by reference, constitutes the entire agreement between the Parties. It supersedes all previous communications, representations, or contracts, either written or oral, which purport to describe or embody the subject matter of this MOA.

(b) No amendment of this MOA shall be of any force or effect unless set forth in a written instrument signed by authorized representatives of each Party.

(c) This MOA is made and entered into for the sole benefit of the Parties, and the Parties intend that no other person or entity shall be a direct or indirect beneficiary of this MOA.

(d) This MOA shall be interpreted consistent with and governed by federal law.

(e) In the event that any provision of this MOA is determined to be invalid or unenforceable for any reason, in whole or part, the remaining provisions of this MOA shall be unaffected thereby and shall remain in full force and effect to the fullest extent permitted by law, and such invalid or unenforceable provision shall be replaced by the Parties with a provision that is valid and enforceable and that comes closest to expressing the Parties' intention with respect to such invalid or unenforceable provision.

(f) Each Party shall be solely responsible for and shall pay its own costs and expenses incurred by it in connection with the negotiation of this MOA.

(g) Whenever this MOA requires or provides that (i) a notice be given by a Party to any other Party or (ii) a Party's action requires the approval or consent of any other Party, such notice, consent or approval shall be given in writing and shall be given in accordance with the provisions of Exhibit B to this MOA.

(h) This MOA is binding on any successors and assigns of the Parties. No Party may otherwise transfer or assign this MOA, in whole or in part, without the other Parties' written consent. Such consent shall not be unreasonably withheld.

(i) Nothing contained in this MOA shall be construed as creating a corporation, company, partnership, association, joint venture or other entity, nor shall anything contained in this MOA be construed as

creating or requiring any fiduciary relationship between the Parties. No Party shall be responsible hereunder for the acts or omissions of any other Party. Nothing herein shall preclude (i) a Party from taking any action (or having its affiliates take any action) with respect to any other transmission project, including any such project that may compete with the projects provided herein, or (ii) the Parties jointly from entering into MOAs with third parties for the joint development, construction, ownership or operation of any project or for the provision of transmission capacity from such project.

(j) Other than the obligation to pay amounts due under Section 4, in no event shall any Party be liable to any other Party under any provision of this MOA for any losses, damages, costs or expenses for any direct, special, indirect, incidental, consequential, or punitive damages, including but not limited to loss of profit or revenue, whether based in whole or in part in contract or in tort, including negligence, strict liability, or any other theory of liability; provided, however, that damages for which a Party may be liable to any other Party under another agreement will not be considered to be special, indirect, incidental, or consequential damages hereunder.

(k) The Parties shall not be in breach of their respective obligations to the extent the failure to fulfill any obligation is due to an Uncontrollable Force. "Uncontrollable Force" means an event beyond the reasonable control of, and without the fault or negligence of, the Party claiming the Uncontrollable Force, that prevents that Party from performing its contractual obligations under this MOA and which, by exercise of that party's reasonable care, diligence and foresight, such Party was unable to avoid. Uncontrollable Forces include, but are not limited to:

(1) strikes or work stoppage;

(2) floods, earthquakes, or other natural disasters; terrorist acts; and

(3) final orders or injunctions issued by a court or regulatory body having competent subject matter jurisdiction which the Party claiming the Uncontrollable Force, after diligent efforts, was unable to have stayed, suspended, or set aside pending review by a court of competent subject matter jurisdiction.

Neither the unavailability of funds or financing, nor conditions of national or local economies or markets shall be considered an Uncontrollable Force. The economic hardship of a Party shall not

constitute an Uncontrollable Force. Nothing contained in this provision shall be construed to require any Party to settle any strike or labor dispute in which it may be involved.

If an Uncontrollable Force prevents a Party from performing any of its obligations under this MOA, such party shall: (1) immediately notify the other Parties of such Uncontrollable Force by any means practicable and confirm such notice in writing as soon as reasonably practicable; (2) use its best efforts to mitigate the effects of such Uncontrollable Force, remedy its inability to perform, and resume full performance of its obligation hereunder as soon as reasonably practicable; (3) keep the other Parties apprised of such efforts on an ongoing basis; and (4) provide written notice of the resumption of performance. Written notices sent under this section 10(k) must comply with Exhibit B, Notices and Contact Information.

11. WAIVER

No waiver of any provision or breach of this MOA shall be effective unless such waiver is in writing and signed by the waiving Party, and any such waiver shall not be deemed a waiver of any other provision of this MOA or any other breach of this MOA.

12. SIGNATURE

The Parties have caused this MOA to be executed as of the latest date all Parties have signed this MOA.

CITY OF SEATTLE CITY LIGHT DEPARTMENT		UNITED STATES OF AMERICA Department of Energy Bonneville Power Administration	
By:	Jorge Carrasco	By:	Harder Juj
Name: *(Print/ Type)*	Jorge Carrasco	Name: *(Print/ Type)*	Harder Juj
Title:	Superintendent	Title:	VP, Planning + Asset Mgmt.
Date:	1/31/12	Date:	1/31/12

PUGET SOUND ENERGY, INC.

By: Susan McLain

Name: Susan McLain
(Print/ Type)

Title: Senior Vice President Delivery Operations

Date: 1/31/12

EXHIBIT A
PREFERRED PLAN OF SERVICE

EXHIBIT B
NOTICES

Any notice required under this MOA shall be in writing and shall be delivered in person; or with proof of receipt by a nationally recognized delivery service or by United States Certified Mail. Notices are effective when received. Either Party may change the name or address for receipt of notice by providing notice of such change. The Parties shall deliver notices to the following person and address:

If to Seattle City Light:

Attention:
Phone:
Fax:
Email:

If by First Class Mail:

City of Seattle, City Light Department
(Customer Address)
(Customer City, State, Zip)

If by Overnight Delivery Service:
City of Seattle, City Light Department
(Customer Address)
(Customer City, State, Zip)

If to BPA:

Attention:
Phone:
Fax:
Email:

If by First Class Mail:

Bonneville Power Administration
P.O. Box 61409
Vancouver, WA 98666-1409

If by Overnight Delivery Service:
Bonneville Power Administration – TSE/TPP-2
7500 NE 41st Street – Suite 130
Vancouver, WA 98662

If to the Puget:

Attention:
Phone:
Fax:
Email:

If by First Class Mail:

Puget Sound Energy, Inc.
P.O. Box 97034
Bellevue, WA 98009-9734

If by Overnight Delivery Service:
Puget Sound Energy, Inc.
10885 N.E. 4th Street, Suite 1100
Bellevue, WA 98004-5591

EXHIBIT A
PREFERRED PLAN OF SERVICE

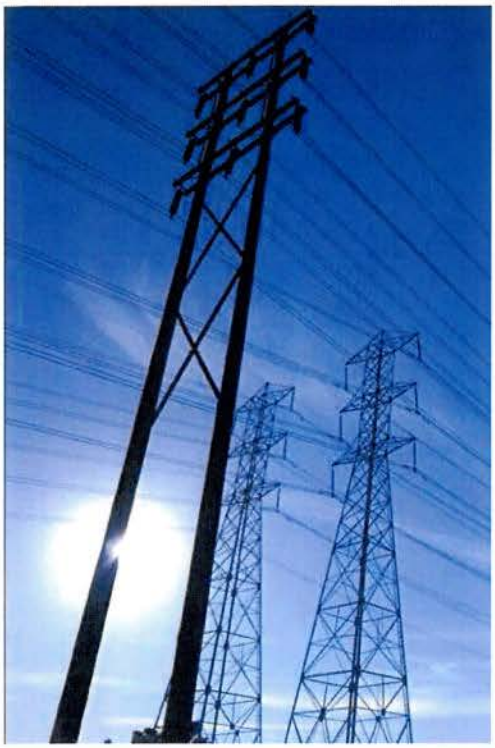

Updated Recommended Transmission Expansion Plan for the Puget Sound Area to Support Winter South-to-North Transfers

ColumbiaGrid

Puget Sound Area Study Team

Bonneville Power Administration, Puget Sound Energy, Seattle City Light, Snohomish County PUD, Tacoma Power, Powerex

Provisional Approval by the Study Team on April 25, 2011

Final Approval by the Study Team on October 28, 2011

Introduction and Conclusions

In October of 2010, the Puget Sound Area Study Team issued a report entitled "Transmission Expansion Plan for the Puget Sound Area." The report is available via the ColumbiaGrid website. The report details a transmission plan for the Puget Sound region that would, as a basic requirement, provides for reliable system performance while significantly improving the ability of the transmission grid to support power transfers between the Northwest and British Columbia. Since the release of the original report, the following changes have occurred that have led to the need for the Puget Sound Area Study Team to revise their transmission plan:

1) ***Additional scenarios*** – The Puget Sound area utilities have been meeting regularly since the publication of the original report in October 2010 and have developed several additional scenarios to be studied (e.g., the addition of a new Broad Street-Massachusetts 115 kV underground cable). In response, the study team repeated their prior analysis for the critical winter south-to-north condition for the new scenarios. The results of this analysis are shown in the table provided in Appendix A.

2) ***Increased likelihood that Puget Sound Energy will move forward with Sammamish-Lakeside-Talbot project*** – Since the development of the original plan, Puget Sound Energy has further developed their plan to rebuild two 115 kV lines to 230 kV (Sammamish-Lakeside-Talbot #1 and #2) and provide new 230/115 kV transformation at their Lakeside Substation. Although both lines will be rebuilt, only one of the lines may be initially energized at 230 kV. As stated in the prior report, this facility addition can delay the need to reconductor the Maple Valley-SnoKing 230 kV lines beyond the ten-year transmission planning horizon.

   The study team decided that since Puget Sound Energy is moving forward with this plan, the Sammamish-Lakeside-Talbot project should be listed as the proposed project in the plan instead of the Maple Valley-SnoKing reconductor. This project will give Puget Sound Energy the ability to provide necessary load support at Lakeside which cannot be achieved with the Maple Valley-SnoKing reconductor project, while providing similar Transmission Curtailment Risk Measure (TCRM) benefits as the Maple Valley-SnoKing reconductor project. A downside of the Sammamish-Lakeside-Talbot project is that its south-to-north Total Transfer Capability (TTC) is lower as compared to the Maple Valley-SnoKing reconductor. However, the Sammamish-Lakeside-Talbot project has additional benefits over the Maple Valley-SnoKing reconductor project in that it provides an additional 230 kV transmission path through the Puget Sound area and makes it feasible to reconductor rather than rebuild the Bothell-SnoKing 230 kV lines.

3) ***Increased likelihood that Seattle City Light will move forward with their North Downtown Substation Project*** – Since the development of the plan, Seattle City Light has indicated that plans to add a new North Downtown Substation have become more likely. The final plan is still being developed by SCL. The option studied includes a new underground cable (North Downtown-Massachusetts 230 kV), a new 115 kV line between North Downtown and Canal, and two 230/115 kV transformers at the proposed substation (see the following Figure One). This project was studied in the prior plan and, as identified previously, a third set of series inductors will be required on the new Canal-North Downtown 115 kV line with the addition of the North Downtown Substation. The plan for the system without, or prior to, the addition of the North Downtown Substation remains the same (adding series inductors on the two 115 kV underground cables). There is not a significant impact on the plan with or without the North Downtown Substation project as long as the project includes a third set of series inductors on the new North Downtown-Canal 115 kV line.

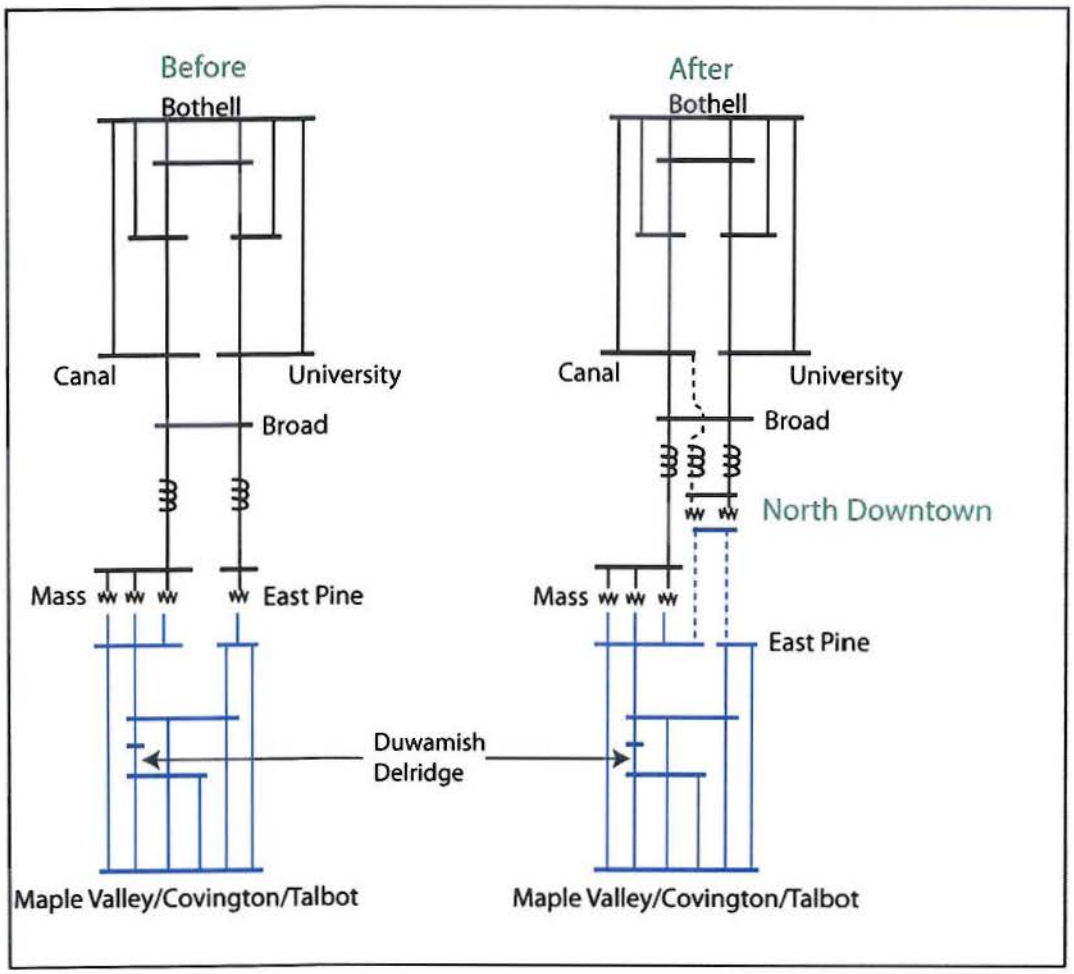

Figure One: One-Line Diagram with the proposed locations of the series inductor additions, before and after the Seattle City Light North Downtown Substation Project.

4) ***Seattle area line rating increases*** – Several key transmission lines in the region have been rerated to a higher capability. In some cases the new ratings provide a 77% increase over the ratings that were utilized in the original study. This has enabled the study team to reduce the size of the series inductors (from 26 ohms to 6 ohms) that were proposed for the Seattle City Light 115 kV transmission lines and cables. The smaller inductors lead to more power flowing through the Seattle City Light system resulting in the need to include an additional facility reconductor in the plan; the Duwamish-Delridge 230 kV line. The cost of this additional reconductor is estimated to be relatively low ($1.6 million). This additional cost is projected to be partially offset by the savings achieved by the installation of smaller inductors. The smaller inductors also reduce the need to add shunt capacitors to offset the reactive losses from the larger sized inductors.

5) ***Seattle City Light Update to TPS Settings*** - Seattle City Light has recently updated the TPS settings which have resulted in operational changes that preclude it from being used as a project in this study to reduce TCRM and increase TTC levels on the northern intertie. All results that use the previous scheme have not been included in this report.

As a result of the above changes, the plan to support south-to-north transfers has been revised as specified in this report. Additional transmission facilities, such as a second Portal Way 230/115 kV transformer, will likely be necessary to support north-to-south transfers. These additional facilities will be further analyzed in subsequent studies.

Overview of Revised Plan

As a result of the above changes, the Transmission Expansion Plan for the Puget Sound Area was revised and the new plan is shown in the following Figure Two:

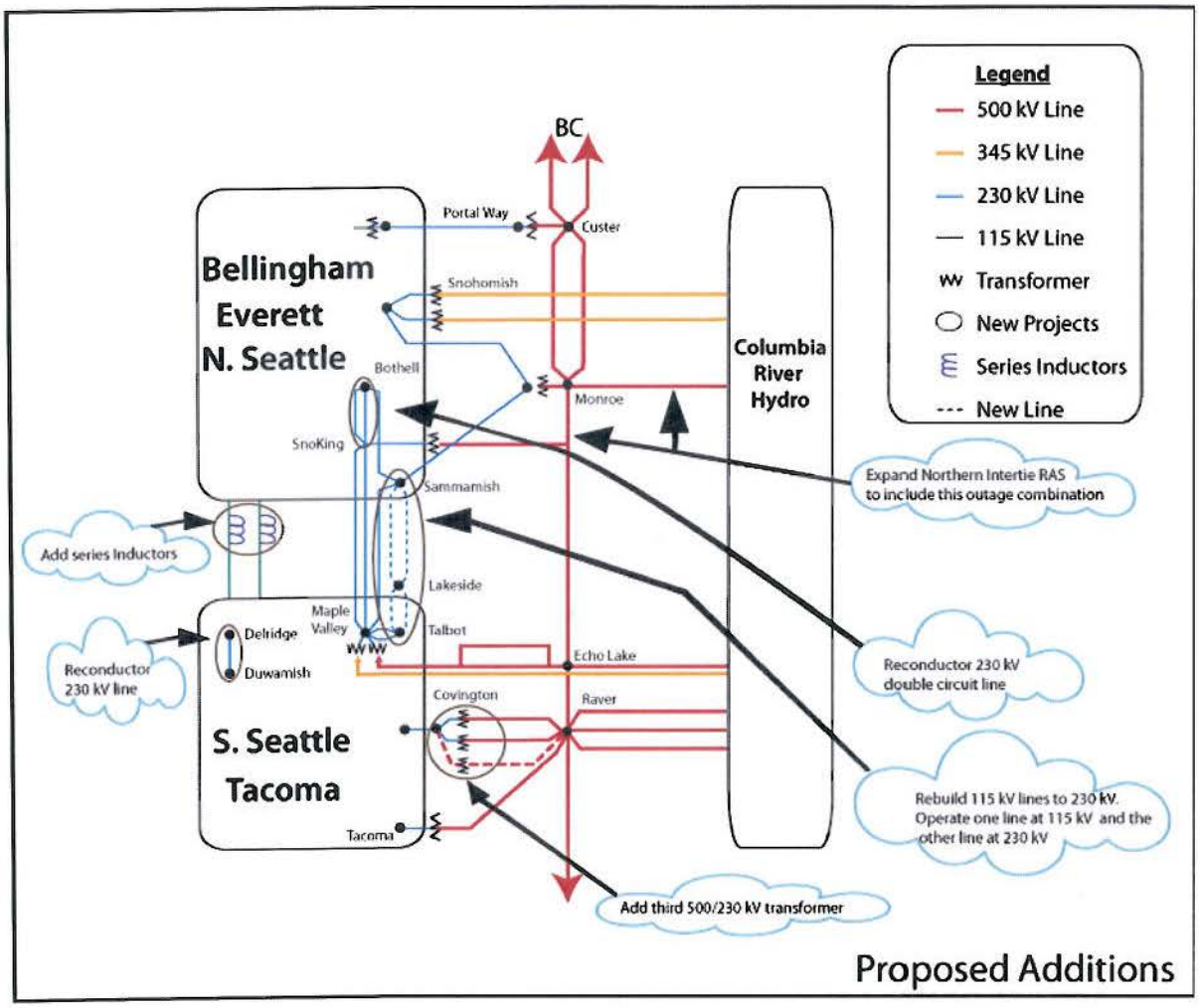

Figure Two: Revised Puget Sound Area Transmission Expansion Plan for Supporting South-to-North Transfers

Projects included in the Puget Sound Area Transmission Expansion Plan to support south-to-north transfers are:

- Reconductor the double circuit Bothell-SnoKing 230 kV lines with high temperature conductor
- Expand the Northern Intertie RAS
- Add a third Covington 500/230 kV transformer
- Reconductor the Delridge-Duwamish 230 kV line
- Add series inductors to the Massachusetts-Union-Broad and East Pine-Broad 115 kV lines in the downtown Seattle system. The final inductor size is under study and may vary from the 6 ohms specified in this report. Each line may have a different inductor size to optimize the system.
- Rebuild both the Sammamish-Lakeside-Talbot 115 kV lines to 230 kV. Energize one line at 230 kV and the other at 115 kV.

The cost estimates for the project in the preferred plan are shown in the following table. It should be noted that portions of the projects may be planned for local utility service and may not be necessary to accomplish the transfer capability goals of this study.

PSAST Preferred South-to-North Plan Cost Estimate	
	Cost Estimate (M)
Reconductor Bothell-SnoKing 230kV #1 & #2 with high temperature conductor	$3
Extend the Northern Intertie RAS to trip for the combined outage of the Chief Joseph-Monroe and Monroe-SnoKing-Echo Lake 500 kV lines	$3
Add a third Covington 500/230 kV transformer, a 500 kV terminal at Raver for the third Raver-Covington 500 kV line, and a 500 kV Bus at Covington	$60
Reconductor Delridge - Duwamish 230 kV Line with high temperature conductor	$2
6 ohm inductors on the two 115 kV cables out of SCL's Broad Street Substation	$13
Lakeside 230/115 kV transformer, rebuild both 115 kV Sammamish – Talbot lines to 230 kV energizing one line at 230 kV	$65
Total Preferred Projects	$146

* The majority of these estimates are preliminary estimates. More detailed estimates will be developed by the Puget Sound Area utilities.

Next Steps

Now that the overall south-to-north plan is complete, the individual transmission owners need to identify the parties responsible for each of the projects and agree on the cost allocation for the projects. After this has been completed, detailed feasibility studies, cost estimates, project timing, and schedules will be completed. In addition, the following project specific studies will be completed by the Puget Sound Area Study Team:

- North-to-South transfer conditions will be studied to determine the effect that the new preferred plan has on transfer capability and to determine if any additional projects are needed.
- Series Inductor Project: Studies need to be completed to determine the proper size for the series inductors, the impact on north-to-south transfers, and the preferred switching arrangement.
- Determine how long the proposed plan will last. The PSAST will grow the Northwest loads in the current 2020 base case to 2025 and 2030 load levels. The additional load will be served by eastern resources. TCRM and TTC values will be calculated to determine whether they may degrade over time.
- Northern Intertie RAS Expansion Project: The Puget Sound Area Study Team will be available to assist BPA and BC Hydro with any additional studies necessary to implement this RAS expansion.
- Covington Transformer Project: Additional studies will be completed by BPA, to further analyze alternative locations for this transformer addition, the need for a 500 kV switchyard at Covington, potential operational solutions, potential remedial action schemes, the size of the transformer, the impedance of the transformer, and the preferred connection to the 230 kV bus. The BPA studies will be coordinated with area utilities through the Puget Sound Area Study Team.

While the projects identified in this report improve the transfer capability through the Puget Sound Area, there remain curtailment risks for firm transfers during outage conditions (N-1-X). Consequently, the Puget Sound Area Study Team will continue to investigate cost effective ways to reduce the risk of firm curtailments.

Study Results

New winter south-to-north studies were completed for a variety of scenarios and the detailed study results are provided in Appendix A. The system performance for each scenario was compared using the following two measures in addition to cost and permitting feasibility:

1) ***Transmission Curtailment Risk Measure (TCRM):*** TCRM is a measure of the likelihood of experiencing curtailments of transfers between the Northwest and British Columbia. The higher the TCRM value the greater the exposure to curtailments. The TCRM analysis

includes the cases with all facilities in service as well as with any single facility out of service. A detailed description of the TCRM methodology is provided in the original report. In the original report, winter and summer conditions for both north-to-south and south-to-north transfers were studied. For this update, only winter conditions with south-to-north transfers were studied as that is the critical system state for the alternatives presented in this report.

2) ***Total Transfer Capability (TTC):*** The TTC (thermal only) of the Westside Northern Intertie (WSNI) was calculated for each of the options in the traditional way, with all lines in service. Only the winter south-to-north condition was studied, with 680 MW of generation operating in the Puget Sound Area. The specific generation unit assumptions are as described in Appendix J of the original report. Puget Sound Area generation during winter peak is between 950 MW and 1550 MW 80% of the time (when load has been greater than 6000MW along with temperature below 32 degrees F). With higher levels of Puget Sound Area generation, the TTC numbers shown in the tables would likely increase.

The major issues addressed in this study are the impacts of the various alternatives on the 115 kV system in the Seattle area, and the impacts of the various alternatives on the 230 kV system between the Maple Valley and SnoKing areas. In all cases, the other major projects as described in the original report are modeled, which include the Northern Intertie RAS expansion, third Covington transformer, and second Portal Way transformer. In addition, the Bothell-SnoKing rebuild project was included in most scenarios although sensitivity studies were conducted for the reconductor option which ended up being the preferred option. Provided below is a discussion of each of the major issues addressed by the study team and their conclusions.

1) 26 ohm versus 6 ohm series inductors

Table 1: Selected TCRM and TTC Results, 26 ohm inductors vs. 6 ohm inductors

Study #	Series Inductors on SCL's 115 kV Cables- 26 ohms	Series Inductors on SCL's 115 kV Cables- 6 ohms	Maple Valley-SnoKing High Temp	PSE's Sammamish - Lakeside - Talbot 115kV to 230kV Upgrade Project (Two Lines Operated at 230 kV)	Total TCRM - Without TCRM Lines Outside of the Puget Sound Area	Winter South North WSNI Thermal TTC at 680 MW Puget Sound Generation
3	X		X		10,304	2,270
4		X	X		8,433	2,297
17	X			X	10,460	1,773
18		X		X	8,666	2,038

With the changes in 115 kV line ratings, the Seattle 115 kV system is capable of accommodating greater flows. As a result, using a series inductor impedance greater than 6 ohms is no longer necessary to reduce the loadings on the Seattle 115 kV system. In fact, the TCRM is slightly better (lower) with the smaller 6 ohm inductors. Prior studies have also indicated that the smaller inductor size provided better results for summer north-to-south conditions. Higher impedance inductors also would have the undesirable effect of pushing more power over to the Maple Valley-SnoKing lines and reducing the TTC. In addition the smaller inductors require the addition of fewer shunt capacitors to offset the reactive losses from the inductors. The 6 ohm inductors have the effect of adding a circuit reactance that is equivalent to 8 miles of overhead 115 kV line. The 6 ohm inductors are now the preferred 115 kV project due to better performance and lower cost.

2) 6 ohm series inductors versus phase shifting transformers

Table 2: 6 ohm series inductors versus phase shifting transformers

Study #	SCL Phase Shifting Transformer	Series Inductors on SCL's 115 kV Cables- 6 ohms	Maple Valley-SnoKing High Temp	PSE's Sammamish - Lakeside - Talbot 115kV to 230kV Upgrade Project (Two Lines Operated at 230 kV)	Total TCRM - Without TCRM Lines Outside of the Puget Sound Area	Winter South North WSNI Thermal TTC at 680 MW Puget Sound Generation
1	X		X		13,122	2,455
4		X	X		8,433	2,297
15	X			X	11,500	2,136
18		X		X	8,666	2,038

The TCRM studies for the phase shifting transformer project may not reflect the true performance of this project due to the difficulty of accurately modeling the phase shifting transformer operating strategy. As a result, while the TCRM studies show poorer performance for the phase shifting transformers than for the series inductor project, the study team believes that this result is a shortcoming of the phase shifter modeling and, in fact, the phase shifters should perform as well or better than the series inductors. This was the conclusion of the TTC studies, where a benefit was observed when using the phase shifting transformers instead of fixed series inductors. However, as the incremental benefits are not believed to be sufficient to justify the higher capital and maintenance costs of the phase shifter option, the 6 ohm series inductors remain the recommended project.

3) 6 ohm series inductors versus adding a third 115 kV cable

Table 3: 6 ohm inductor versus adding a third 115 kV cable

Study #	Series Inductors on SCL's 115 kV Cables- 6 ohms	3rd 115 kV Underground Cable from Mass to Broad Street & Mass Bank 1 Energized	Maple Valley-SnoKing High Temp	PSE's Sammamish - Lakeside - Talbot 115kV to 230kV Upgrade Project (Two Lines Operated at 230 kV)	Total TCRM - Without TCRM Lines Outside of the Puget Sound Area	Winter South North WSNI Thermal TTC at 680 MW Puget Sound Generation
4	X		X		8,433	2,297
5		X	X		19,027	1,513
18	X			X	8,666	2,038
19		X		X	11,213	2,297

This option examines adding a third Seattle City Light 115 kV underground cable (a second cable from Broad Street to Massachusetts) in place of the 6 ohm inductors. The results for this alternative vary depending on whether the Sammamish-Lakeside-Talbot lines are upgraded to 230 kV or the Maple Valley-SnoKing lines are reconductored. With the preferred plan (upgrading the Sammamish-Lakeside-Talbot lines to 230 kV), there is a benefit to the alternative of adding a third cable from a TTC perspective and a slight benefit to the series inductor option from the TCRM perspective. Conversely, if the Maple Valley-SnoKing reconductor project moves forward, the series inductor option performs better from both a TCRM and TTC perspective. This is because if a third cable is added, there is still a need for the series inductors to eliminate overloading on the Broad Street-East Pine 115 kV cable, the East Pine-Maple Valley 230 kV line, and the Massachusetts 230/115 kV transformers. The third cable option is deemed to be less preferable to the recommended option primarily because the cost of the third cable is expected to far exceed the cost of the series inductors. In addition, the construction of an additional Broad-Massachusetts 115 kV cable is incompatible with Seattle City Light's future plan to add a new 230 kV cable as part of their North Downtown Substation

Project (North Downtown-Massachusetts 230 kV). The 6 ohm series inductors remain the preferred project due to better performance and lower cost.

4) ***6 Ohm Series inductors versus replacing cables***

Table 4: 6 ohm inductors versus replacing cables

Study #	Series Inductors on SCL's 115 kV Cables- 6 ohms	Replace SCL's Existing 115 kV Cables (no inductors)	Maple Valley-SnoKing High Temp	PSE's Sammamish - Lakeside - Talbot 115kV to 230kV Upgrade Project (Two Lines Operated at 230 kV)	Total TCRM - Without TCRM Lines Outside of the Puget Sound Area	Winter South North WSNI Thermal TTC at 680 MW Puget Sound Generation
4	X		X		8,433	2,297
6		X	X		19,398	1,602
18	X			X	8,666	2,038
20		X		X	11,746	2,210

If the 6 ohm inductors are in place, potential overloading on the cables is no longer an issue so rebuilding the cables would have no benefit. This option examines rebuilding the cables in lieu of the 6 ohm inductors. The results for this alternative vary depending on whether the Sammamish-Lakeside-Talbot lines are upgraded to 230 kV or the Maple Valley-SnoKing lines are reconductored. With the preferred plan (upgrading the Sammamish-Lakeside-Talbot lines to 230 kV), the series inductors perform better from a TCRM perspective and slightly worse from a TTC perspective. If the Maple Valley-SnoKing reconductor project moves forward then the series inductor option performs better from both a TCRM and TTC perspective. The TCRM performance is better for the series inductor options because if the cables are replaced, there would be other limits reached on the downtown Seattle system. The additional limits reached that account for most of the TCRM increase include the East Pine 230/115 kV transformer and the Massachusetts 230/115 kV transformers. The series inductors remain the preferred project due to better performance and lower cost.

5) 6 ohm *series inductors versus the Seattle City Light North Downtown Substation project with and without series inductors*

Table 5: 6 ohm inductors versus the Seattle City Light North Downtown Substation project with and without series inductors

Study #	Series Inductors on SCL's 115 kV Cables- 6 ohms	SCL's North Downtown Substation	SCL's North Downtown Substation (6 ohm inductors)	Maple Valley-SnoKing High Temp	PSE's Sammamish - Lakeside - Talbot 115kV to 230kV Upgrade Project (Two Lines Operated at 230 kV)	Total TCRM - Without TCRM Lines Outside of the Puget Sound Area	Winter South North WSNI Thermal TTC at 680 MW Puget Sound Generation
4	X			X		8,433	2,297
32		X		X		117,049	-1,380
36			X	X		8,778	2,672
18	X				X	8,666	2,038
34		X			X	38,594	-832
38			X		X	9,101	2,207

The study results indicate that the TCRM would increase dramatically and the TTC would be negative (not capable of south-to-north transfers) unless the series inductors are included in the plans for the new North Downtown Substation. The majority of this increase is due to overloading on the Broad-North Downtown 115 kV cable. As a result, the series inductors are needed before and after the addition of the North Downtown Substation Project.

6) **6 ohm series inductors:** ***Reinforcing Maple Valley–SnoKing 230 kV lines versus options to upgrade Sammamish-Lakeside-Talbot 115 kV lines versus Monroe-Echo Lake #2***

Table 6: 6 ohm inductors – Reinforcing Maple Valley–SnoKing 230 kV lines versus options to upgrade Sammamish-Lakeside-Talbot 115 kV lines versus Monroe-Echo Lake #2

Study #	Series Inductors on SCL's 115 kV Cables- 6 ohms	Maple Valley-SnoKing High Temp	Maple Valley-SnoKing Rebuild	PSE's Sammamish - Lakeside - Talbot 115kV to 230kV Upgrade Project (Two Lines Operated at 230 kV)	PSE's Sammamish - Lakeside - Talbot 115kV to 230kV Upgrade Project (One Line Operated at 230 kV)	Monroe-Echo Lake #2 500kV	Total TCRM - Without TCRM Lines Outside of the Puget Sound Area	Winter South North WSNI Thermal TTC at 680 MW Puget Sound Generation
4	X	X					8,433	2,297
11	X		X				7,623	2,632
18	X			X			8,666	2,038
28	X	X		X			9,003	2,700
81	X				X		13,422	1,643
80	X					X	5,047	2,875

The lowest TCRM and the highest TTC for line improvements east of Lake Washington can be achieved by building the Monroe-Echo Lake #2 500 kV line in addition to the 6 ohm series inductors. Unfortunately, this is also the highest cost transmission option.

From a TCRM perspective there is little difference between the Maple Valley – SnoKing reinforcement options and the Sammamish – Lakeside – Talbot upgrade project with two lines operated at 230 kV although the Maple Valley-SnoKing rebuild option performs slightly better than the others. From a TTC perspective, there is an advantage for the Maple Valley-SnoKing options; particularly the rebuild option. However, this was not deemed to be a sufficient advantage over the preferred Sammamish-Lakeside-Talbot 230 kV upgrade project with two lines operated at 230 kV. A major benefit of the Sammamish-Lakeside-Talbot options is that

they would provide necessary load service to Lakeside Substation which the Maple Valley-SnoKing options would not. Pursuing the Sammamish-Lakeside-Talbot options at this time does not preclude reconductoring the Maple Valley-SnoKing lines at a later time.

The Sammamish – Lakeside – Talbot upgrade project can defer some of its substation construction costs by initially upgrading the 115 kV lines to 230 kV and operating one line at 115 kV and one line at 230 kV. This option did not perform as well as operating both lines at 230 kV for both TCRM and TTC. The reduction in performance has been deemed acceptable for the cost savings. The second line planned to be cut-over to 230 kV operation at a later date.

7) **6 ohm series inductors and Sammamish-Lakeside-Talbot upgrade:** ***Bothell-SnoKing rebuild versus reconductor***

Table 7: 6 ohm series inductors and Sammamish-Lakeside-Talbot upgrade: Bothell-SnoKing rebuild versus reconductor

Study #	Series Inductors on SCL's 115 kV Cables- 6 ohms	PSE's Sammamish - Lakeside - Talbot 115kV to 230kV Upgrade Project (Two Lines Operated at 230 kV)	PSE's Sammamish - Lakeside - Talbot 115kV to 230kV Upgrade Project (One Line Operated at 230 kV)	Bothell - SnoKing Rebuild	Bothell - SnoKing High Temp Instead of Rebuild	Total TCRM - Without TCRM Lines Outside of the Puget Sound Area	Winter South North WSNI Thermal TTC at 680 MW Puget Sound Generation
18	X	X		X		8,666	2,038
47	X	X			X	9,512	2,086
81	X		X	X		13,422	1,643
82	X		X		X	13,663	1,677

For either Sammamish – Lakeside – Talbot upgrade option the TCRM and TTC results are similar for the Bothell-SnoKing rebuild and reconductoring options. The reconductor of the Bothell-SnoKing lines would provide acceptable performance at a lower cost with minimal permitting and mitigation requirements.

Appendix A

Table of TCRM and TTC Results

ColumbiaGrid PSAST Options for N-1-X TCRM Determination

	115 kV Reinforcement Options									230 kV & 500 kV Reinforcement Options							TCRM & TTC Values		
Study #	SCL Phase Shifting Transformer	Series Inductors on SCL's 115 kV Cables- 26 ohms	Series Inductors on SCL's 115 kV Cables- 6 ohms	3rd 115 kV Underground Cable from Mass to Broad Street & Mass Bank 1 Energized	Replace SCL's Existing 115 kV Cables (no inductors)	Replace SCL's Existing 115 kV Cables (6 ohm inductors)	SCL's North Downtown Substation	SCL's North Downtown Substation (6 ohm inductors)	Maple Valley-SnoKing High Temp	Maple Valley-SnoKing Rebuild	PSE's Sammamish - Lakeside - Talbot 115kV to 230kV Upgrade Project (Two Lines Operated at 230 kV)	PSE's Sammamish - Lakeside - Talbot 115kV to 230kV Upgrade Project (One Line Operated at 230 kV)	Monroe-Echo Lake #2 500kV	Bothell - SnoKing High Temp Instead of Rebuild	With Covington, Portalway, Extended RAS, Bothell - SnoKing Upgrade	Total TCRM - Without TCRM Lines Outside of the Puget Sound Area	TTC (Thermal Only)	Notes
54																308,343	-	PSAST 2020 Winter South-to-North Expansion Plan Base Case
24															X	73,898	920	
1	X								X						X	13,122	2455	
3		X							X						X	10,304	2270	
4			X						X						X	8,433	2297	
5				X					X						X	19,027	1513	
6					X				X						X	19,398	1602	
7						X			X						X	8,258	2448	
32							X		X						X	117,049	-1380	
36								X	X						X	8,778	2672	
8	X									X					X	14,039	2692	
10		X								X					X	12,659	2652	
11			X							X					X	7,623	2632	
12				X						X					X	13,172	1820	
13					X					X					X	13,012	2120	
14						X				X					X	7,423	2664	
33							X			X					X	82,697	-1350	
37								X		X					X	7,111	2708	
15	X										X				X	11,500	2136	
17		X									X				X	10,460	1773	
18			X								X				X	8,666	2038	
81			X									X			X	13,422	1643	
47			X								X			X	X	9,512	2086	
82			X									X		X	X	13,663	1677	Preferred Plan
19				X							X				X	11,213	2297	
20					X						X				X	11,746	2210	
21						X					X				X	8,666	2044	
34							X				X				X	38,594	-832	
38								X			X				X	9,101	2207	
49								X			X			X	X	10,286	2233	
25	X								X		X				X	9,664	2745	
27		X							X		X				X	9,288	2497	
28			X						X		X				X	9,003	2700	
29				X					X		X				X	11,460	2305	
30					X				X		X				X	12,395	2377	
31						X			X		X				X	9,003	2700	
35							X		X		X				X	38,463	-804	
39								X	X		X				X	9,296	2732	
56								X	X		X			X	X	10,285	2753	
22													X		X	13,501	2104	
40							X						X		X	46,466	-292	
41								X					X		X	4,143	2916	
80			X										X		X	5,047	2875	

EXHIBIT B
NOTICES

Any notice required under this MOA shall be in writing and shall be delivered in person; or with proof of receipt by a nationally recognized delivery service or by United States Certified Mail. Notices are effective when received. Either Party may change the name or address for receipt of notice by providing notice of such change. The Parties shall deliver notices to the following person and address:

If to Seattle City Light:

Attention:
Phone:
Fax:
Email:

If by First Class Mail:

City of Seattle, City Light Department
(Customer Address)
(Customer City, State, Zip)

If by Overnight Delivery Service:
City of Seattle, City Light Department
(Customer Address)
(Customer City, State, Zip)

If to BPA:

Attention:
Phone:
Fax:
Email:

If by First Class Mail:

Bonneville Power Administration
P.O. Box 61409
Vancouver, WA 98666-1409

If by Overnight Delivery Service:
Bonneville Power Administration – TSE/TPP-2
7500 NE 41st Street – Suite 130
Vancouver, WA 98662

If to the Puget:

Attention:
Phone:
Fax:
Email:

If by First Class Mail:

Puget Sound Energy, Inc.
P.O. Box 97034
Bellevue, WA 98009-9734

If by Overnight Delivery Service:
Puget Sound Energy, Inc.
10885 N.E. 4th Street, Suite 1100
Bellevue, WA 98004-5591

From: Marleau,Michael L (BPA) - TEP-TPP-1
To: Moffett,Justin T (BPA) - KEC-4
Cc: Adams,Hub V (BPA) - LN-7; Timberman,Toni L (BPA) - TSE-TPP-2
Subject: RE: PSE "Eastside" project
Date: Wednesday, July 16, 2014 2:36:14 PM

Thanks Justin, I'll review and compare with the info I have.

From: Moffett,Justin T (BPA) - KEC-4
Sent: Wednesday, July 16, 2014 2:27 PM
To: Marleau,Michael L (BPA) - TEP-TPP-1
Cc: Adams,Hub V (BPA) - LN-7; Timberman,Toni L (BPA) - TSE-TPP-2
Subject: FW: PSE "Eastside" project

Mike,
I received the email below from Toni Timberman via my manager this afternoon. It looks like Toni Timberman is working on an amendment to the project scope in the PSANI MOA- which based on our recent meeting with Hub, is what I thought you were doing. Are you aware of this? I don't see your name on the scope change letter agreement she drafted (see attached) so I thought I should pull you into the loop incase we're duplicating efforts. Let me know if there is anything I can do to help.
Thanks.

Justin T. Moffett, PWS
Environmental Protection Specialist | KEC-4
BONNEVILLE POWER ADMINISTRATION
bpa.gov | P 503-230-3233 | C 503-758-2088

From: Lynard,Gene P (BPA) - KEC-4
Sent: Wednesday, July 16, 2014 12:09 PM
To: Moffett,Justin T (BPA) - KEC-4
Subject: FW: PSE "Eastside" project

fyi

From: Timberman,Toni L (BPA) - TSE-TPP-2
Sent: Wednesday, July 16, 2014 12:06 PM
To: Lynard,Gene P (BPA) - KEC-4
Subject: RE: PSE "Eastside" project

There is another issue to be resolved.

Seattle would like something from BPA saying that the projects under the PSANI MOA are separate for NEPA / SEPA purposes. Is this something we can do?

I have attached the MOA for your information. I also attached the letter agreement I am drafting describing the project scope changes under the MOA.

Thanks,

Toni

From: Lynard,Gene P (BPA) - KEC-4
Sent: Wednesday, July 16, 2014 11:16 AM
To: St Hilaire,Kimberly R (BPA) - KEC-4
Cc: Timberman,Toni L (BPA) - TSE-TPP-2
Subject: RE: PSE "Eastside" project

Not familiar with the Eastside project. If we knew the question we would be happy to assist in providing the answer.

From: St Hilaire,Kimberly R (BPA) - KEC-4
Sent: Wednesday, July 16, 2014 11:07 AM
To: Lynard,Gene P (BPA) - KEC-4; Timberman,Toni L (BPA) - TSE-TPP-2
Subject: FW: PSE "Eastside" project

Hi Toni,
I'm not sure, but Gene would know.
Kimberly

From: Timberman,Toni L (BPA) - TSE-TPP-2
Sent: Wednesday, July 16, 2014 11:02 AM
To: St Hilaire,Kimberly R (BPA) - KEC-4
Subject: PSE "Eastside" project

Hi Kimberly,

BPA and Puget have been discussing Puget's proposed "Eastside" project, which is a new transmission line and substation. (b) (5) [redacted]

Last week Puget told me that someone on the BPA environmental staff had been discussing this project with Puget staff. Do you know who that was? My contact at Puget asked me to touch base with that BPA person.

Thanks,
Toni

From:	Gibson,Paula L (BPA) - TSES-TPP-2
To:	Timberman,Toni L (BPA) - TSE-TPP-2
Subject:	RE: spiff up please
Date:	Wednesday, July 16, 2014 2:36:07 PM
Attachments:	16053_PSE-SCL-PSANI_MOA SCOPE CHANGE LTR_AGMT.doc

Here you go, I went ahead and created a three party contract to assign to this and will relate it to the MOA in CCM.

From: Timberman,Toni L (BPA) - TSE-TPP-2
Sent: Wednesday, July 16, 2014 11:43 AM
To: Gibson,Paula L (BPA) - TSES-TPP-2
Subject: spiff up please

Hi Paula,

Attached is the first of four Letter Agreements I will be writing that are associated with the PSANI MOA, Contract No. 11TX-15450.

I took another letter agreement and tried to use it as a template.

Could you please spiff this up, replacing the return information to our group rather than CSEs, and make any other appropriate changes?

I will send the draft to Puget and Seattle for a look prior to sending for internal review. I want to be sure this meets their needs.

Thanks,
Toni

Department of Energy

Bonneville Power Administration
P.O. Box 61409
Vancouver, WA 98666-1409

TRANSMISSION SERVICES

July ~~3~~22, 2014

In reply refer to: TSE/TPP-2

Contract No. 14TX-16053
Letter Agreement

Ms. Booga Gilbertson
Senior Supervisor, T&D System Planning
Puget Sound Energy, Inc.
10885 NE 4th Street, PSE – 11S
Bellevue, WA 98004

Mr. Phillip West
Customer Service Energy Officer
City of Seattle, City Light Department
700 Fifth Avenue, Suite 2822
Seattle, WA 98104-5031

Dear Ms. Gibertson and Mr. West:

The Bonneville Power Administration (BPA), Puget Sound Energy, Inc. (PSE) and City of Seattle, City Light Department (SCL) are parties to the Memorandum of Agreement (MOA), Contract No. 11TX-15450, relating to the Preferred Puget Sound Area Plan of Service Projects and Cost Allocation. The parties to the MOA are currently in the initial stages of development of the projects described in the MOA. As this has progressed, certain aspects of the MOA were identified that the parties believe need to be clarified.

This Letter Agreement is intended to clarify the scope changes related to the Covington 500 kV Transformer Addition Project described in Section 3(a) of the MOA and the Bothell to SnoKing Reconductor Project described in Section 3(c) of the MOA.

BPA's transformer addition originally planned for Covington ~~s~~Substation has been moved to Raver ~~s~~Substation. There is no change in financial responsibility under the MOA due to this relocation.

The Bothell to SnoKing Reconductor Project was identified in the MOA as an SCL project. However, during subsequent discussions it was discovered that BPA owns the first ½ mile of these lines on the SnoKing end. BPA will rebuild its owned portion of these lines at its cost, including any necessary replacement of equipment within SnoKing ~~s~~Substation associated with these lines.

Please sign all three originals of this Agreement where indicated, returning two originals to BPA ~~one of the addresses listed below~~at one of the following addresses. The remaining original is for your records. BPA will ensure that Puget and SCL have a full set of original signature pages.

Formatted: Font color: Auto

Formatted: Font color: Auto

Formatted: Font color: Auto

Comment [BPA_USER1]: Is this a new Title? Your contacts says VP Operations Services Booga is not in CDM

Formatted: Normal

In order to meet the project schedule, the executed Agreement must be received by ~~c~~Close of ~~b~~Business (COB) August 1, 2014. If BPA does not receive the executed Agreement by COB August 1, 2014, this ~~offer~~ Letter Agreement will be considered withdrawn.

First Class Mail	Overnight Delivery Service
Bonneville Power Administration	Bonneville Power Administration
Mail Stop: TSE/TPP-2	Mail Stop: TSE/TPP-2
P.O. Box 61409	7500 NE 41st Street – Suite 130
Vancouver, WA 98666-1409	Vancouver, WA 98662

Formatted: Font: Century Schoolbook

If you have any questions, please call me at (360) 619-6015.

Sincerely,

Toni L. Timberman
Senior Transmission Account Executive
Transmission Sales

CONCUR:

PUGET SOUND ENERGY, INC.

By: _____

Name: _____
(Print/Type)

Title: _____

Date: _____

CITY OF SEATTLE,
CITY LIGHT DEPARTMENT

By: _____

Name: _____
(Print/Type)

Title: _____

Date: _____

bcc:
C. Olsen– KSC-TPP-1
B. Bennett – LT-7
J. Weiss – TPCV-/COVINGTON
T. Timberman – TSE-/TPP-2
P. Gibson – TSES-/TPP-2
Customer File – TS~~E~~/-TPP-2 (TM-11, Puget Sound Energy, Inc.)
Customer File – TSE-/TPP-2 (TM-11, City of Seattle, City Light Department.)
Official File – CCM Support

(W:\CT\Puget Sound Energy, Inc\Drafts\16053_PSE-SCL-PSANI MOA SCOPE CHANGE LTR AGMT.Doc)

Formatted: Font: 8 pt

From: Moffett,Justin T (BPA) - KEC-4
To: Timberman,Toni L (BPA) - TSE-TPP-2
Cc: Lynard,Gene P (BPA) - KEC-4; Adams,Hub V (BPA) - LN-7; Marleau,Michael L (BPA) - TEP-TPP-1
Subject: RE: PSE "Eastside" project
Date: Wednesday, July 16, 2014 3:39:06 PM

Hi Toni,
I tried calling you this afternoon to discuss your email below. As a follow up to your question below, yes we did determine in a past meeting with Hub Adams that the projects within the PSANI MOA do have sufficient "independent utility" to justify conducting separate NEPA reviews for each. Feel free to call me when you have a minute and I can brief you on our NEPA strategy for all the projects in the MOA.
Thanks.

Justin T. Moffett, PWS
Environmental Protection Specialist | KEC-4
BONNEVILLE POWER ADMINISTRATION
bpa.gov | P 503-230-3233 | C 503-758-2088

From: Timberman,Toni L (BPA) - TSE-TPP-2
Sent: Wednesday, July 16, 2014 12:06 PM
To: Lynard,Gene P (BPA) - KEC-4
Subject: RE: PSE "Eastside" project

There is another issue to be resolved.

Seattle would like something from BPA saying that the projects under the PSANI MOA are separate for NEPA / SEPA purposes. Is this something we can do?

I have attached the MOA for your information. I also attached the letter agreement I am drafting describing the project scope changes under the MOA.

Thanks,
Toni

From: Lynard,Gene P (BPA) - KEC-4
Sent: Wednesday, July 16, 2014 11:16 AM
To: St Hilaire,Kimberly R (BPA) - KEC-4
Cc: Timberman,Toni L (BPA) - TSE-TPP-2
Subject: RE: PSE "Eastside" project

Not familiar with the Eastside project. If we knew the question we would be happy to assist in providing the answer.

From: St Hilaire,Kimberly R (BPA) - KEC-4
Sent: Wednesday, July 16, 2014 11:07 AM
To: Lynard,Gene P (BPA) - KEC-4; Timberman,Toni L (BPA) - TSE-TPP-2
Subject: FW: PSE "Eastside" project

Hi Toni,
I'm not sure, but Gene would know.
Kimberly

From: Timberman,Toni L (BPA) - TSE-TPP-2
Sent: Wednesday, July 16, 2014 11:02 AM
To: St Hilaire,Kimberly R (BPA) - KEC-4
Subject: PSE "Eastside" project

Hi Kimberly,

BPA and Puget have been discussing Puget's proposed "Eastside" project, which is a new transmission line and substation. (b) (5) [redacted]

Last week Puget told me that someone on the BPA environmental staff had been discussing this project with Puget staff. Do you know who that was? My contact at Puget asked me to touch base with that BPA person.

Thanks,
Toni

From: Gibson,Paula L (BPA) - TSES-TPP-2
To: Timberman,Toni L (BPA) - TSE-TPP-2
Subject: RE: spiff up please
Date: Wednesday, July 16, 2014 11:47:10 AM

Yes I'll start working on it here after lunch. Thanks

From: Timberman,Toni L (BPA) - TSE-TPP-2
Sent: Wednesday, July 16, 2014 11:43 AM
To: Gibson,Paula L (BPA) - TSES-TPP-2
Subject: spiff up please

Hi Paula,

Attached is the first of four Letter Agreements I will be writing that are associated with the PSANI MOA, Contract No. 11TX-15450.

I took another letter agreement and tried to use it as a template.

Could you please spiff this up, replacing the return information to our group rather than CSEs, and make any other appropriate changes?

I will send the draft to Puget and Seattle for a look prior to sending for internal review. I want to be sure this meets their needs.

Thanks,
Toni

Department of Energy

Bonneville Power Administration
P.O. Box 61409
Vancouver, WA 98666-1409

TRANSMISSION SERVICES

July 3, 2014

In reply refer to: TSE/TPP-2

Contract No. 14TX - zzzzz
Letter Agreement

Ms. Booga Gilbertson
Senior Supervisor, T&D System Planning
Puget Sound Energy, Inc.

Bellevue, WA 98vvv

Mr. Phillip West

City of Seattle, City Light Department

Seattle, WA 98xxx

Dear Ms. Gilbertson and Mr. West:

The Bonneville Power Administration (BPA), the City of Seattle, City Light Department (SCL) and Puget Sound Energy, Inc. (PSE) are parties to the Memorandum of Agreement (MOA), Contract No. 11TX-15450, relating to the Preferred Puget Sound Area Plan of Service Projects and Cost Allocation. The parties to the MOA are currently in the initial stages of development of the projects described in the MOA. As this has progressed certain aspects of the MOA were identified that the parties believe need to be clarified.

This Letter Agreement is intended to clarify the scope changes related to the Covington 500 kV Transformer Addition Project described in section 3.(a) of the MOA and the Bothell to SnoKing Reconductor Project described in section 3. (c) of the MOA.

BPA's transformer addition originally planned for Covington substation has been moved to Raver substation. There is no change in financial responsibility under the MOA due to this relocation.

The Bothell to SnoKing Reconductor Project was identified in the MOA as an SCL project. However, during subsequent discussions it was discovered that BPA owns the first ½ mile of these lines on the SnoKing end. BPA will rebuild its owned portion of these lines at its cost, including any necessary replacement of equipment within SnoKing substation associated with these lines.

DRAFT

Please sign all three originals of this Agreement where indicated, returning two originals to one of the addresses listed below. The remaining original is for your records. BPA will ensure that SCL and Puget have a full set of original signature pages.

In order to meet the project schedule, the executed Agreement must be received by close of business (COB) August 1, 2014. If BPA does not receive the executed Agreement by COB August 1, 2014, this offer will be considered withdrawn.

First Class Mail
U.S. Department of Energy
Bonneville Power Administration
ATTN: Tonya Van Cleave - TPCC/TPP-4
P.O. Box 61409
Vancouver, WA 98666

Overnight Delivery Service
U.S. Department of Energy
Bonneville Power Administration
ATTN: Tonya Van Cleave - TPCC/TPP-4
7500 NE 41st Street, Suite 130
Vancouver, WA 98662
Phone: (360) 619-6050

If you have any questions concerning this agreement, please contact me at (360) 619-6015.

Sincerely,

Toni L. Timberman
Senior Transmission Account Executive
Transmission Sales

ACCEPTED

TACOMA POWER

By: _____

Name: _____
(Print/Type)

Title: _____

Date: _____

ACCEPTED

PUGET SOUND ENERGY

By:

DRAFT

bcc:
R. Shier – FRG-2
P. Walters – FRG-2
B. Bennett – LT-7
C. Hamel – TEP/TPP-1
S. Kannan – TFB/DOB-1
J. Jusupovic – TPC/TPP-4
D. Sauer – TPCC/TPP-4
T. Van Cleave – TPCC/TPP-4
J. Brank – TPCV/OLYMPIA
P. Fiedler – TPCV/TPP-4
T. Timberman – TSE/TPP-2
P. Gibson – TSES/TPP-2
Customer File – TPC/TPP-4 (ED-21-11/Tacoma Power)
Customer File – TSE/TPP-2 (TM-11/Tacoma Power)
PWA File – TPC/TPP-4 (N0310/Latest Status)
Official File – CCM_Support (Agreement 14TP-10657)

DRAFT

From: Timberman,Toni L (BPA) - TSE-TPP-2
To: Lynard,Gene P (BPA) - KEC-4
Subject: RE: PSE "Eastside" project
Date: Wednesday, July 16, 2014 11:49:00 AM

Ok –
Here is the link on Puget's web site.
http://www.energizeeastside.com/
I am asking Puget who from BPA was talking to them.
Give me a call and I will let you know the issue.
Toni
X6015

From: Lynard,Gene P (BPA) - KEC-4
Sent: Wednesday, July 16, 2014 11:16 AM
To: St Hilaire,Kimberly R (BPA) - KEC-4
Cc: Timberman,Toni L (BPA) - TSE-TPP-2
Subject: RE: PSE "Eastside" project

Not familiar with the Eastside project. If we knew the question we would be happy to assist in providing the answer.

From: St Hilaire,Kimberly R (BPA) - KEC-4
Sent: Wednesday, July 16, 2014 11:07 AM
To: Lynard,Gene P (BPA) - KEC-4; Timberman,Toni L (BPA) - TSE-TPP-2
Subject: FW: PSE "Eastside" project

Hi Toni,
I'm not sure, but Gene would know.
Kimberly

From: Timberman,Toni L (BPA) - TSE-TPP-2
Sent: Wednesday, July 16, 2014 11:02 AM
To: St Hilaire,Kimberly R (BPA) - KEC-4
Subject: PSE "Eastside" project

Hi Kimberly,

BPA and Puget have been discussing Puget's proposed "Eastside" project, which is a new transmission line and substation. (b) (5) [redacted]

Last week Puget told me that someone on the BPA environmental staff had been discussing this project with Puget staff. Do you know who that was? My contact at Puget asked me to touch base with that BPA person.

Thanks,
Toni

From: Timberman,Toni L (BPA) - TSE-TPP-2
To: Lynard,Gene P (BPA) - KEC-4
Subject: RE: PSE "Eastside" project
Date: Wednesday, July 16, 2014 12:05:00 PM
Attachments: PSANI MOA scope change letter agreement.doc
11TX-15450_CT_PDF.pdf

There is another issue to be resolved.

Seattle would like something from BPA saying that the projects under the PSANI MOA are separate for NEPA / SEPA purposes. Is this something we can do?

I have attached the MOA for your information. I also attached the letter agreement I am drafting describing the project scope changes under the MOA.

Thanks,
Toni

From: Lynard,Gene P (BPA) - KEC-4
Sent: Wednesday, July 16, 2014 11:16 AM
To: St Hilaire,Kimberly R (BPA) - KEC-4
Cc: Timberman,Toni L (BPA) - TSE-TPP-2
Subject: RE: PSE "Eastside" project

Not familiar with the Eastside project. If we knew the question we would be happy to assist in providing the answer.

From: St Hilaire,Kimberly R (BPA) - KEC-4
Sent: Wednesday, July 16, 2014 11:07 AM
To: Lynard,Gene P (BPA) - KEC-4; Timberman,Toni L (BPA) - TSE-TPP-2
Subject: FW: PSE "Eastside" project

Hi Toni,
I'm not sure, but Gene would know.
Kimberly

From: Timberman,Toni L (BPA) - TSE-TPP-2
Sent: Wednesday, July 16, 2014 11:02 AM
To: St Hilaire,Kimberly R (BPA) - KEC-4
Subject: PSE "Eastside" project

Hi Kimberly,

BPA and Puget have been discussing Puget's proposed "Eastside" project, which is a new transmission line and substation. (b) (5) [redacted]

Last week Puget told me that someone on the BPA environmental staff had been discussing this project with Puget staff. Do you know who that was? My contact at Puget asked me to touch base

with that BPA person.

Thanks,
Toni

Department of Energy

Bonneville Power Administration
P.O. Box 61409
Vancouver, WA 98666-1409

TRANSMISSION SERVICES

July 3, 2014

In reply refer to: TSE/TPP-2

Contract No. 14TX - zzzzz
Letter Agreement

Ms. Booga Gilbertson
Senior Supervisor, T&D System Planning
Puget Sound Energy, Inc.

Bellevue, WA 98vvv

Mr. Phillip West

City of Seattle, City Light Department

Seattle, WA 98xxx

Dear Ms. Gilbertson and Mr. West:

The Bonneville Power Administration (BPA), the City of Seattle, City Light Department (SCL) and Puget Sound Energy, Inc. (PSE) are parties to the Memorandum of Agreement (MOA), Contract No. 11TX-15450, relating to the Preferred Puget Sound Area Plan of Service Projects and Cost Allocation. The parties to the MOA are currently in the initial stages of development of the projects described in the MOA. As this has progressed certain aspects of the MOA were identified that the parties believe need to be clarified.

This Letter Agreement is intended to clarify the scope changes related to the Covington 500 kV Transformer Addition Project described in section 3.(a) of the MOA and the Bothell to SnoKing Reconductor Project described in section 3. (c) of the MOA.

BPA's transformer addition originally planned for Covington substation has been moved to Raver substation. There is no change in financial responsibility under the MOA due to this relocation.

The Bothell to SnoKing Reconductor Project was identified in the MOA as an SCL project. However, during subsequent discussions it was discovered that BPA owns the first ½ mile of these lines on the SnoKing end. BPA will rebuild its owned portion of these lines at its cost, including any necessary replacement of equipment within SnoKing substation associated with these lines.

DRAFT

Please sign all three originals of this Agreement where indicated, returning two originals to one of the addresses listed below. The remaining original is for your records. BPA will ensure that SCL and Puget have a full set of original signature pages.

In order to meet the project schedule, the executed Agreement must be received by close of business (COB) August 1, 2014. If BPA does not receive the executed Agreement by COB August 1, 2014, this offer will be considered withdrawn.

First Class Mail
U.S. Department of Energy
Bonneville Power Administration
ATTN: Tonya Van Cleave - TPCC/TPP-4
P.O. Box 61409
Vancouver, WA 98666

Overnight Delivery Service
U.S. Department of Energy
Bonneville Power Administration
ATTN: Tonya Van Cleave - TPCC/TPP-4
7500 NE 41st Street, Suite 130
Vancouver, WA 98662
Phone: (360) 619-6050

If you have any questions concerning this agreement, please contact me at (360) 619-6015.

Sincerely,

Toni L. Timberman
Senior Transmission Account Executive
Transmission Sales

ACCEPTED

TACOMA POWER

By: _____

Name: _____
(Print/Type)

Title: _____

Date: _____

ACCEPTED

PUGET SOUND ENERGY

By:

DRAFT

bcc:
R. Shier – FRG-2
P. Walters – FRG-2
B. Bennett – LT-7
C. Hamel – TEP/TPP-1
S. Kannan – TFB/DOB-1
J. Jusupovic – TPC/TPP-4
D. Sauer – TPCC/TPP-4
T. Van Cleave – TPCC/TPP-4
J. Brank – TPCV/OLYMPIA
P. Fiedler – TPCV/TPP-4
T. Timberman – TSE/TPP-2
P. Gibson – TSES/TPP-2
Customer File – TPC/TPP-4 (ED-21-11/Tacoma Power)
Customer File – TSE/TPP-2 (TM-11/Tacoma Power)
PWA File – TPC/TPP-4 (N0310/Latest Status)
Official File – CCM_Support (Agreement 14TP-10657)

DRAFT

Contract No. 11TX-15450

MEMORANUDUM OF AGREEMENT

executed by the

UNITED STATES OF AMERICA

DEPARTMENT OF ENERGY

acting by and through the

BONNEVILLE POWER ADMINISTRATION

and

THE CITY OF SEATTLE

acting by and through its

CITY LIGHT DEPARTMENT

and

PUGET SOUND ENERGY, INC.

(Relating to the Preferred Puget Sound Area Plan of Service Projects and Cost Allocation)

This MEMORANDUM OF AGREEMENT (MOA) is executed by the UNITED STATES OF AMERICA, Department of Energy, acting by and through the BONNEVILLE POWER ADMINISTRATION (BPA), THE CITY OF SEATTLE, acting by and through its CITY LIGHT DEPARTMENT (Seattle City Light), and PUGET SOUND ENERGY INC. (Puget). BPA, Seattle City Light, and Puget are sometimes referred to individually as "Party" and collectively as "Parties".

WHEREAS, BPA owns and is responsible for the reliable operation of the Federal Columbia River Transmission System (FCRTS),

WHEREAS, Seattle City Light and Puget each own and operate electric systems that are interconnected with the FCRTS in the Puget Sound Area and electric power is delivered within those electric systems, and to or from them by BPA over the FCRTS,

WHEREAS, the Puget Sound Area experiences periods of transmission congestion that may require mitigation to maintain reliable operation of the Puget Sound Area Interconnection, including in some cases, curtailments of firm transmission service,

WHEREAS, as of February 2011, the Parties entered into Contract No. 11TX-15290, "Temporary Operational Support Program Agreement," that provides for voluntary changes in planned generation, including an increase in Puget Sound Area generation, as temporary and short-term measures for relieving forecasted transmission congestion conditions that are expected to adversely affect the reliable operation of the Puget Sound Area Interconnection,

WHEREAS, representatives from each of the Parties and other entities participated in regional studies to develop a long term plan, and implement a range of physical improvements to preserve the reliable operation of the Puget Sound Area interconnection, and reduce the need to curtail firm transmission service,

WHEREAS, the Parties have identified the projects described herein that, when taken as a whole, are expected to preserve the reliable operation of the Puget Sound Area Interconnection, and reduce the need to curtail firm transmission service; and it is in their individual and collective interests to continue to support the efforts needed to carry out these projects, and

WHEREAS, the transmission congestion affecting the Puget Sound Area interconnection is a shared problem, and the projects and cost sharing arrangements provided herein are appropriate.

NOW THEREFORE, in consideration of the mutual obligations and undertakings herein, the sufficiency of which is acknowledged, the Parties agree as follows:

1. DEFINITIONS

(a) "Bothell to SnoKing Reconductor Project" means the project identified in the Preferred Plan of Service in which Seattle City Light will reconductor the existing Bothell to SnoKing No. 1 and No. 2 230 kV lines with high-temperature conductor.

(b) "BPA Preferred Plan Projects" means, collectively, the Covington 500 kV Transformer Addition Project and the Northern Intertie Remedial Action Scheme ("RAS") Improvement Project.

(c) "Broad Street Inductor Project" means the project identified in the Preferred Plan of Service in which Seattle City Light will add series inductors (up to 10 ohm) to the Massachusetts-Broad Street 115 kV line.

(d) "ColumbiaGrid" means the Washington non-profit membership corporation formed to improve the operational efficiency, reliability, and planned expansion of the Pacific Northwest transmission grid, the

eight members of which, as of the Effective Date, are Avista Corporation; BPA; Public Utility District No. 1 of Chelan County, Washington; Public Utility District No. 2 of Grant County, Washington; Puget; Seattle City Light; Public Utility District No. 1 of Snohomish County, Washington; and Tacoma Power.

(e) "Covington 500 kV Transformer Addition Project" means the project identified in the Preferred Plan of Service in which BPA will install a third 500–230 kV transformer at the BPA Covington Substation.

(f) "Delridge to Duwamish Reconductor Project" means the project identified in the Preferred Plan of Service in which Seattle City Light will reconductor the existing Delridge to Duwamish 230 kV line with high-temperature conductor.

(g) "Lakeside 230 kV Transformer Addition Project" means the project identified in the Preferred Plan of Service in which Puget will install a 230–115 kV transformer at the Puget Lakeside Substation.

(h) "Maple Valley to SnoKing Reconductor Project" means the project identified in the Preferred Plan of Service in which Seattle City Light will reconductor the existing Maple Valley to SnoKing 230 kV line with high-temperature conductor.

(i) "North Downtown Inductor Project" means the project identified in the Preferred Plan of Service in which Seattle City Light will add series inductors (up to 10 ohm) to the East Pine-Broad Street line as part of Seattle City Light's North Downtown Substation Project.

(j) "Northern Intertie RAS Improvement Project" means the project identified in the Preferred Plan of Service in which BPA will install new software for and re-wire electrical protection devices on the Northern Intertie RAS.

(k) "Northern Intertie RAS" means the existing BPA pre-programmed set of automatic operating steps that are designed to protect the regional high voltage electric grid in the event of a loss of one of the two Custer-Monroe 500 kV lines.

(l) "Preferred Plan of Service" means the "Updated Recommended Transmission Expansion Plan for the Puget Sound Area to Support Winter South-to-North Transfers" approved by ColumbiaGrid on October 28, 2011, a copy of which is attached as Exhibit A to this MOA.

(m) "Preferred Plan Projects" means, collectively, the BPA Preferred Plan Projects, the Puget Preferred Plan Projects, and the Seattle City Light Preferred Plan Projects.

(n) "Puget Preferred Plan Projects" means the Sammamish to Lakeside to Talbot Rebuild Project and the Lakeside 230 kV Transformer Addition Project.

(o) "Sammamish to Lakeside to Talbot Rebuild Project" means the project identified in the Preferred Plan of Service in which Puget will upgrade Puget's existing Sammamish to Lakeside to Talbot 115 kV lines to 230 kV operation using Puget's existing Sammamish to Lakeside to Talbot utility corridor.

(p) "Seattle City Light Preferred Plan Projects" means the Bothell to SnoKing Reconductor Project, the Broad Street Inductor Project, the North Downtown Inductor Project, and the Delridge to Duwamish Reconductor Project.

2. TERM

The term of this MOA shall be effective on the date of execution by all Parties (Effective Date) and shall continue until the earliest to occur of the following: (i) the date of completion of the last of the Preferred Plan Projects; (ii) a Party terminates this MOA pursuant to section 5(c) of this MOA; or (iii) December 31, 2020.

3. PREFERRED PLAN OF SERVICE PROJECTED PROJECT COMPLETION SCHEDULE AND COST

(a) **BPA Preferred Plan Projects**. Each Party acknowledges that, as of the Effective Date, the projected project completions schedule and capital costs of the BPA Preferred Plan Projects are as follows:

BPA Preferred Plan Project	Projected Completion	Projected Capital Cost
1. Covington 500 kV Transformer Addition Project	2018	$56.2 million
2. Northern Intertie RAS Improvement Project	2014	$4.0 million

(b) **Puget Preferred Plan Projects.** Each Party acknowledges that, as of the Effective Date, the projected project completions schedule and capital costs of the Puget Preferred Plan Projects are as follows:

Puget Preferred Plan Project	Projected Completion	Projected Capital Cost
1. Sammamish to Lakeside to Talbot Rebuild Project	2017	$45.0 million (single circuit) or $41.3 million (double circuit)
2. Lakeside 230 kV Transformer Addition Project	2017	$22.0 million

(c) **Seattle City Light Preferred Plan Projects.** Each Party acknowledges that, as of the Effective Date, the projected project completions schedule and capital costs of the Seattle City Light Preferred Plan Projects are as follows:

Seattle City Light Preferred Plan Project	Projected Completion	Projected Capital Cost
1. Bothell to SnoKing Reconductor Project	2017	$2.5 million
2. Broad Street Inductor Project	2017	$7.3 million*
3. North Downtown Inductor Project	2017	$4.4 million*
4. Delridge to Duwamish Reconductor Project	2016	$1.9 million

(d) **Preferred Plan Project Not Planned for Construction Based On the Construction of the Puget Preferred Plan Projects.** Each Party acknowledges that, the construction of the Puget Preferred Plan Projects negates the need for the construction of the Maple Valley to

* The projected capital costs of the Broad Street Inductor Project and the North Downtown Inductor Project do not reflect any projected costs for land acquisition. As of the Effective Date, the Parties acknowledge that Seattle City Light may have to acquire land to accomplish the Broad Street Inductor Project, and the actual capital costs of the Broad Street Inductor Project will, if necessary, reflect the actual costs of land acquisition for such project. As of the Effective Date, the Parties do not anticipate that the North Downtown Inductor Project will require Seattle City Light to acquire any land.

SnoKing Reconductor Project. Each Party acknowledges that, as of the Effective Date, the projected project completions schedule and capital costs of the Maple Valley to SnoKing Reconductor Project are as follows:

Preferred Plan Project	Projected Completion	Projected Capital Cost
Maple Valley to SnoKing Reconductor Project	N/A	$16.1 million

4. PRELIMINARY CAPITAL COST ALLOCATION

As of the Effective Date of this MOA, the Parties agree to share in the capital costs of Preferred Plan Projects as follows:

(a) **BPA Preferred Plan Projects**. BPA shall pay the entire actual capital cost of each of (i) the Covington 500 kV Transformer Addition Project and (ii) the Northern Intertie RAS Improvement Project

(b) **Seattle City Light Preferred Plan Projects.** BPA, Puget, and Seattle City Light shall each pay one-third of the total actual capital cost of each of (i) the Bothell to SnoKing Reconductor Project; (ii) the Delridge to Duwamish Reconductor Project; (iii) the Broad Street Inductor Project; and (iv) the North Downtown Inductor Project.

(c) **Puget Preferred Plan Projects.** BPA and Seattle City Light shall each pay to Puget an amount equal to one-third of the adjusted projected capital cost of the Maple Valley to SnoKing Reconductor Project, which adjusted projected capital cost shall be determined as provided in the following table:

Projected Capital Cost of the Maple Valley to SnoKing Reconductor Project	=	$16.1 million * Cost Differences in Reconductor Projects

where:

Cost Differences in Reconductor Projects	=	the quotient of

(i) the sum of the actual capital costs of the Delridge to Duwamish Reconductor Project and Bothell to SnoKing Reconductor Project and

(ii) the sum of the projected capital costs of the Delridge to Duwamish Reconductor Project and Bothell to SnoKing Reconductor Project identified in section 3(c) above (i.e., $4.4 million)

5. FINAL CAPITAL COST ALLOCATION AND OPTION OF ELECTION TO CANCEL

(a) The allocations identified in section 4 are based on preliminary planning capital cost projections. The final capital cost allocation for the Seattle City Light Preferred Plan Projects shall be based on actual design and construction capital costs for each of the Seattle City Light Preferred Plan Projects, and the final capital cost allocation for the Puget Preferred Plan Projects shall be in accordance with the formula proscribed in section 4(a) above. The Parties shall review such actual design and construction capital costs and schedules and shall agree in writing to the final capital cost allocation.

(b) Each Party reserves the right to cancel any Preferred Plan Project for which such Party is the sponsor if such Party determines that

(i) the actual capital cost of such Preferred Plan Project is likely to exceed the projected capital cost of such Preferred Plan Project by a factor that is equal to or in excess of thirty percent (30%), or

(ii) the projected in-service date of the Preferred Plan Project will be more than twenty-four (24) months later than the projected completion date identified in section 3 above for such Preferred Plan Project.

If a Party elects to cancel a Preferred Plan Project for which such Party is a sponsor under this section 5(b), such Party shall provide written notice to such other Parties within five (5) days of such election. Within a reasonable period of time after receipt of such written notice, representatives of the Parties shall convene and identify alternative projects that the Parties expect will preserve the reliable operation of the Puget Sound Area Interconnection and reduce the need to curtail firm transmission service in a manner similar to the project cancelled pursuant to section 5(b). If the Parties cannot agree in good faith upon an alternative project to replace a project cancelled pursuant to section 5(b) within a reasonable period following receipt of written notice of

such termination, then any Party may terminate this MOA upon 90 days' written notice to the other Parties.

6. RESPONSIBILITY FOR ALL OTHER COSTS

(a) Each Party shall be solely responsible for the Preferred Plan Project for which such Party is the sponsor, less the contributions from the other Parties as provided in section 4. This MOA only affects the cost sharing for the Preferred Plan Projects.

(b) Each Party shall own the assets for the Preferred Plan Project for which such Party is the sponsor and shall be solely responsible for the operation and maintenance costs of such assets. Each Party shall be entitled to any capacity increases to its transmission system that results from any assets installed pursuant to this MOA.

(c) If any Party enhances a Preferred Plan Project after completion of such Preferred Plan Project to meet such Party's needs, the cost of such future enhancements shall be borne solely by such Party. Each Party shall attempt in good faith to coordinate with the other Parties with respect to any future enhancements to a Preferred Plan Project to minimize or eliminate any impact to the interconnected electric systems of such other Parties.

7. PAYMENT SCHEDULE

Payments will be made at the completion of individual projects. The Parties shall agree in writing to the method and schedule for the cost share contributions to be made under this MOA.

8. NATIONAL ENVIRONMENTAL POLICY ACT ASSESSMENT

To the extent that BPA's financial contributions under this MOA are determined to trigger the need for analysis of projects under the National Environmental Policy Act, the Parties shall coordinate such assessment.

9. JOINT COMMUNICATIONS

The Parties shall coordinate joint communications regarding presentations of the preferred plan of service to the public.

10. GENERAL PROVISIONS

(a) This MOA, including documents expressly incorporated by reference, constitutes the entire agreement between the Parties. It supersedes all previous communications, representations, or contracts, either written or oral, which purport to describe or embody the subject matter of this MOA.

(b) No amendment of this MOA shall be of any force or effect unless set forth in a written instrument signed by authorized representatives of each Party.

(c) This MOA is made and entered into for the sole benefit of the Parties, and the Parties intend that no other person or entity shall be a direct or indirect beneficiary of this MOA.

(d) This MOA shall be interpreted consistent with and governed by federal law.

(e) In the event that any provision of this MOA is determined to be invalid or unenforceable for any reason, in whole or part, the remaining provisions of this MOA shall be unaffected thereby and shall remain in full force and effect to the fullest extent permitted by law, and such invalid or unenforceable provision shall be replaced by the Parties with a provision that is valid and enforceable and that comes closest to expressing the Parties' intention with respect to such invalid or unenforceable provision.

(f) Each Party shall be solely responsible for and shall pay its own costs and expenses incurred by it in connection with the negotiation of this MOA.

(g) Whenever this MOA requires or provides that (i) a notice be given by a Party to any other Party or (ii) a Party's action requires the approval or consent of any other Party, such notice, consent or approval shall be given in writing and shall be given in accordance with the provisions of Exhibit B to this MOA.

(h) This MOA is binding on any successors and assigns of the Parties. No Party may otherwise transfer or assign this MOA, in whole or in part, without the other Parties' written consent. Such consent shall not be unreasonably withheld.

(i) Nothing contained in this MOA shall be construed as creating a corporation, company, partnership, association, joint venture or other entity, nor shall anything contained in this MOA be construed as

creating or requiring any fiduciary relationship between the Parties. No Party shall be responsible hereunder for the acts or omissions of any other Party. Nothing herein shall preclude (i) a Party from taking any action (or having its affiliates take any action) with respect to any other transmission project, including any such project that may compete with the projects provided herein, or (ii) the Parties jointly from entering into MOAs with third parties for the joint development, construction, ownership or operation of any project or for the provision of transmission capacity from such project.

(j) Other than the obligation to pay amounts due under Section 4, in no event shall any Party be liable to any other Party under any provision of this MOA for any losses, damages, costs or expenses for any direct, special, indirect, incidental, consequential, or punitive damages, including but not limited to loss of profit or revenue, whether based in whole or in part in contract or in tort, including negligence, strict liability, or any other theory of liability; provided, however, that damages for which a Party may be liable to any other Party under another agreement will not be considered to be special, indirect, incidental, or consequential damages hereunder.

(k) The Parties shall not be in breach of their respective obligations to the extent the failure to fulfill any obligation is due to an Uncontrollable Force. "Uncontrollable Force" means an event beyond the reasonable control of, and without the fault or negligence of, the Party claiming the Uncontrollable Force, that prevents that Party from performing its contractual obligations under this MOA and which, by exercise of that party's reasonable care, diligence and foresight, such Party was unable to avoid. Uncontrollable Forces include, but are not limited to:

(1) strikes or work stoppage;

(2) floods, earthquakes, or other natural disasters; terrorist acts; and

(3) final orders or injunctions issued by a court or regulatory body having competent subject matter jurisdiction which the Party claiming the Uncontrollable Force, after diligent efforts, was unable to have stayed, suspended, or set aside pending review by a court of competent subject matter jurisdiction.

Neither the unavailability of funds or financing, nor conditions of national or local economies or markets shall be considered an Uncontrollable Force. The economic hardship of a Party shall not

constitute an Uncontrollable Force. Nothing contained in this provision shall be construed to require any Party to settle any strike or labor dispute in which it may be involved.

If an Uncontrollable Force prevents a Party from performing any of its obligations under this MOA, such party shall: (1) immediately notify the other Parties of such Uncontrollable Force by any means practicable and confirm such notice in writing as soon as reasonably practicable; (2) use its best efforts to mitigate the effects of such Uncontrollable Force, remedy its inability to perform, and resume full performance of its obligation hereunder as soon as reasonably practicable; (3) keep the other Parties apprised of such efforts on an ongoing basis; and (4) provide written notice of the resumption of performance. Written notices sent under this section 10(k) must comply with Exhibit B, Notices and Contact Information.

11. WAIVER

No waiver of any provision or breach of this MOA shall be effective unless such waiver is in writing and signed by the waiving Party, and any such waiver shall not be deemed a waiver of any other provision of this MOA or any other breach of this MOA.

12. SIGNATURE

The Parties have caused this MOA to be executed as of the latest date all Parties have signed this MOA.

CITY OF SEATTLE CITY LIGHT DEPARTMENT		UNITED STATES OF AMERICA Department of Energy Bonneville Power Administration	
By:	Jorge Carrasco	By:	Harder Juj
Name: *(Print/ Type)*	Jorge Carrasco	Name: *(Print/ Type)*	Harder Juj
Title:	Superintendent	Title:	VP, Planning + Asset Mgmt.
Date:	1/31/12	Date:	1/31/12

PUGET SOUND ENERGY, INC.

By: Susan McLain

Name: Susan McLain
(Print/ Type)

Title: Senior Vice President Delivery Operations

Date: 1/31/12

EXHIBIT A
PREFERRED PLAN OF SERVICE

EXHIBIT B
NOTICES

Any notice required under this MOA shall be in writing and shall be delivered in person; or with proof of receipt by a nationally recognized delivery service or by United States Certified Mail. Notices are effective when received. Either Party may change the name or address for receipt of notice by providing notice of such change. The Parties shall deliver notices to the following person and address:

If to Seattle City Light:

Attention:
Phone:
Fax:
Email:

If by First Class Mail:

City of Seattle, City Light Department
(Customer Address)
(Customer City, State, Zip)

If by Overnight Delivery Service:
City of Seattle, City Light Department
(Customer Address)
(Customer City, State, Zip)

If to BPA:

Attention:
Phone:
Fax:
Email:

If by First Class Mail:

Bonneville Power Administration
P.O. Box 61409
Vancouver, WA 98666-1409

If by Overnight Delivery Service:
Bonneville Power Administration – TSE/TPP-2
7500 NE 41st Street – Suite 130
Vancouver, WA 98662

If to the Puget:

Attention:
Phone:
Fax:
Email:

If by First Class Mail:

Puget Sound Energy, Inc.
P.O. Box 97034
Bellevue, WA 98009-9734

If by Overnight Delivery Service:
Puget Sound Energy, Inc.
10885 N.E. 4th Street, Suite 1100
Bellevue, WA 98004-5591

EXHIBIT A
PREFERRED PLAN OF SERVICE

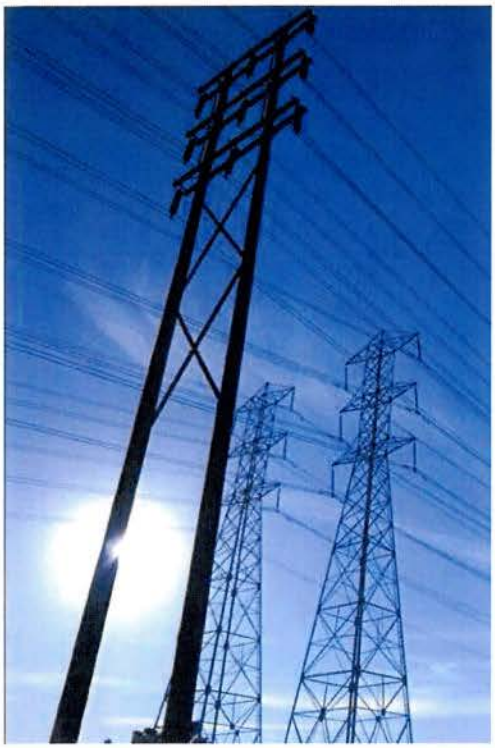

Updated Recommended Transmission Expansion Plan for the Puget Sound Area to Support Winter South-to-North Transfers

ColumbiaGrid

Puget Sound Area Study Team

Bonneville Power Administration, Puget Sound Energy, Seattle City Light, Snohomish County PUD, Tacoma Power, Powerex

Provisional Approval by the Study Team on April 25, 2011

Final Approval by the Study Team on October 28, 2011

Introduction and Conclusions

In October of 2010, the Puget Sound Area Study Team issued a report entitled "Transmission Expansion Plan for the Puget Sound Area." The report is available via the ColumbiaGrid website. The report details a transmission plan for the Puget Sound region that would, as a basic requirement, provides for reliable system performance while significantly improving the ability of the transmission grid to support power transfers between the Northwest and British Columbia. Since the release of the original report, the following changes have occurred that have led to the need for the Puget Sound Area Study Team to revise their transmission plan:

1) ***Additional scenarios*** – The Puget Sound area utilities have been meeting regularly since the publication of the original report in October 2010 and have developed several additional scenarios to be studied (e.g., the addition of a new Broad Street-Massachusetts 115 kV underground cable). In response, the study team repeated their prior analysis for the critical winter south-to-north condition for the new scenarios. The results of this analysis are shown in the table provided in Appendix A.

2) ***Increased likelihood that Puget Sound Energy will move forward with Sammamish-Lakeside-Talbot project*** – Since the development of the original plan, Puget Sound Energy has further developed their plan to rebuild two 115 kV lines to 230 kV (Sammamish-Lakeside-Talbot #1 and #2) and provide new 230/115 kV transformation at their Lakeside Substation. Although both lines will be rebuilt, only one of the lines may be initially energized at 230 kV. As stated in the prior report, this facility addition can delay the need to reconductor the Maple Valley-SnoKing 230 kV lines beyond the ten-year transmission planning horizon.

   The study team decided that since Puget Sound Energy is moving forward with this plan, the Sammamish-Lakeside-Talbot project should be listed as the proposed project in the plan instead of the Maple Valley-SnoKing reconductor. This project will give Puget Sound Energy the ability to provide necessary load support at Lakeside which cannot be achieved with the Maple Valley-SnoKing reconductor project, while providing similar Transmission Curtailment Risk Measure (TCRM) benefits as the Maple Valley-SnoKing reconductor project. A downside of the Sammamish-Lakeside-Talbot project is that its south-to-north Total Transfer Capability (TTC) is lower as compared to the Maple Valley-SnoKing reconductor. However, the Sammamish-Lakeside-Talbot project has additional benefits over the Maple Valley-SnoKing reconductor project in that it provides an additional 230 kV transmission path through the Puget Sound area and makes it feasible to reconductor rather than rebuild the Bothell-SnoKing 230 kV lines.

3) ***Increased likelihood that Seattle City Light will move forward with their North Downtown Substation Project*** – Since the development of the plan, Seattle City Light has indicated that plans to add a new North Downtown Substation have become more likely. The final plan is still being developed by SCL. The option studied includes a new underground cable (North Downtown-Massachusetts 230 kV), a new 115 kV line between North Downtown and Canal, and two 230/115 kV transformers at the proposed substation (see the following Figure One). This project was studied in the prior plan and, as identified previously, a third set of series inductors will be required on the new Canal-North Downtown 115 kV line with the addition of the North Downtown Substation. The plan for the system without, or prior to, the addition of the North Downtown Substation remains the same (adding series inductors on the two 115 kV underground cables). There is not a significant impact on the plan with or without the North Downtown Substation project as long as the project includes a third set of series inductors on the new North Downtown-Canal 115 kV line.

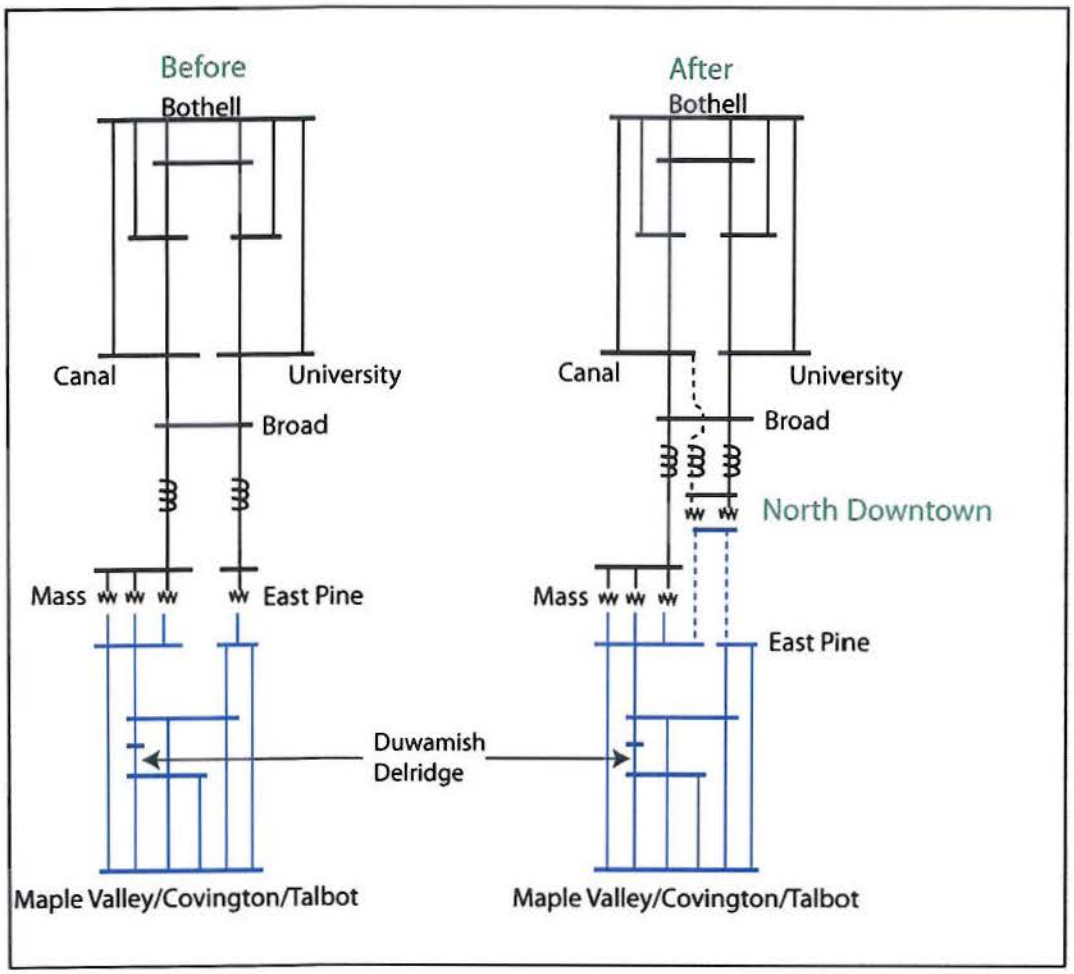

Figure One: One-Line Diagram with the proposed locations of the series inductor additions, before and after the Seattle City Light North Downtown Substation Project.

4) ***Seattle area line rating increases*** – Several key transmission lines in the region have been rerated to a higher capability. In some cases the new ratings provide a 77% increase over the ratings that were utilized in the original study. This has enabled the study team to reduce the size of the series inductors (from 26 ohms to 6 ohms) that were proposed for the Seattle City Light 115 kV transmission lines and cables. The smaller inductors lead to more power flowing through the Seattle City Light system resulting in the need to include an additional facility reconductor in the plan; the Duwamish-Delridge 230 kV line. The cost of this additional reconductor is estimated to be relatively low ($1.6 million). This additional cost is projected to be partially offset by the savings achieved by the installation of smaller inductors. The smaller inductors also reduce the need to add shunt capacitors to offset the reactive losses from the larger sized inductors.

5) ***Seattle City Light Update to TPS Settings*** - Seattle City Light has recently updated the TPS settings which have resulted in operational changes that preclude it from being used as a project in this study to reduce TCRM and increase TTC levels on the northern intertie. All results that use the previous scheme have not been included in this report.

As a result of the above changes, the plan to support south-to-north transfers has been revised as specified in this report. Additional transmission facilities, such as a second Portal Way 230/115 kV transformer, will likely be necessary to support north-to-south transfers. These additional facilities will be further analyzed in subsequent studies.

Overview of Revised Plan

As a result of the above changes, the Transmission Expansion Plan for the Puget Sound Area was revised and the new plan is shown in the following Figure Two:

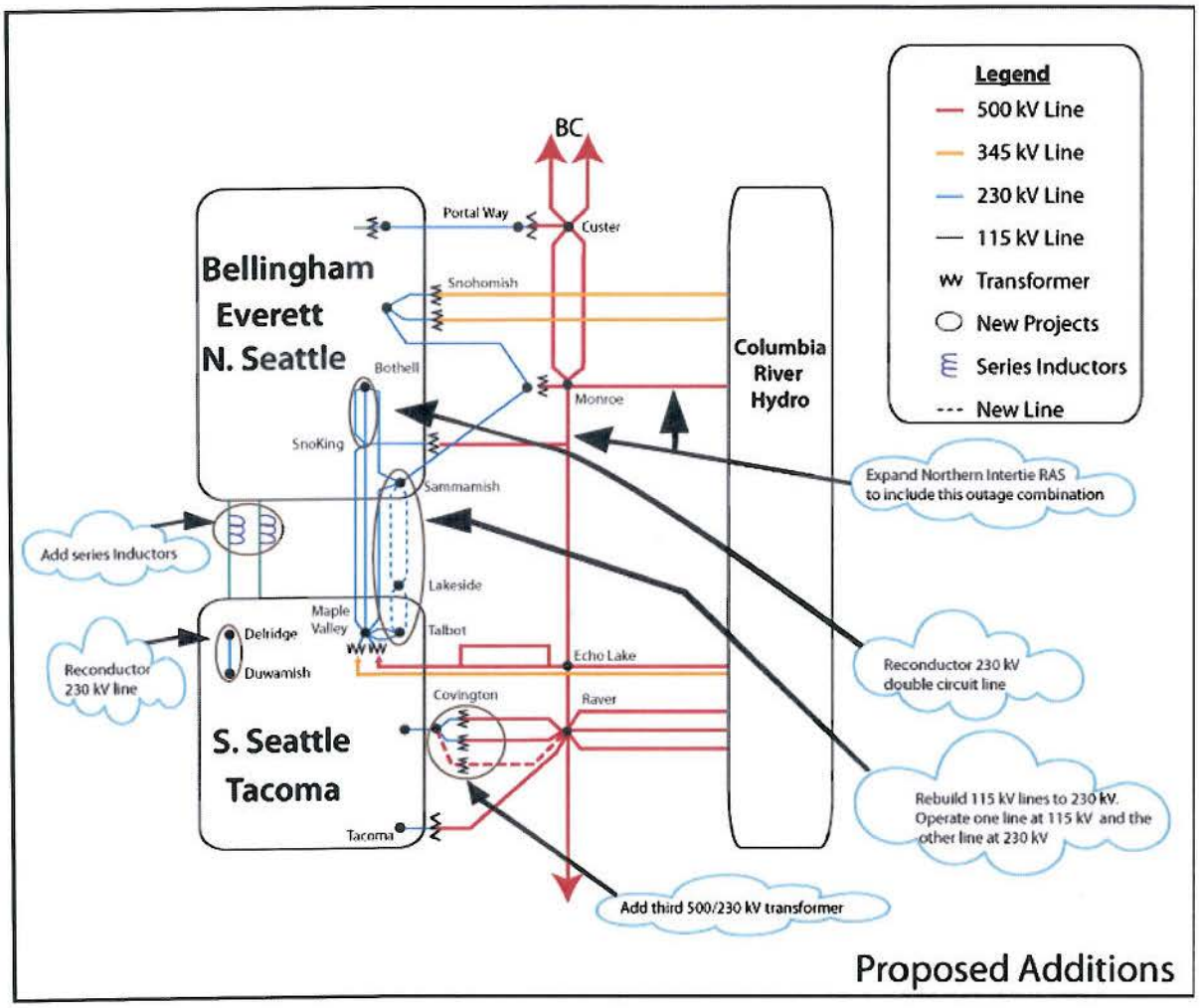

Figure Two: Revised Puget Sound Area Transmission Expansion Plan for Supporting South-to-North Transfers

Projects included in the Puget Sound Area Transmission Expansion Plan to support south-to-north transfers are:

- Reconductor the double circuit Bothell-SnoKing 230 kV lines with high temperature conductor
- Expand the Northern Intertie RAS
- Add a third Covington 500/230 kV transformer
- Reconductor the Delridge-Duwamish 230 kV line
- Add series inductors to the Massachusetts-Union-Broad and East Pine-Broad 115 kV lines in the downtown Seattle system. The final inductor size is under study and may vary from the 6 ohms specified in this report. Each line may have a different inductor size to optimize the system.
- Rebuild both the Sammamish-Lakeside-Talbot 115 kV lines to 230 kV. Energize one line at 230 kV and the other at 115 kV.

The cost estimates for the project in the preferred plan are shown in the following table. It should be noted that portions of the projects may be planned for local utility service and may not be necessary to accomplish the transfer capability goals of this study.

PSAST Preferred South-to-North Plan Cost Estimate	
	Cost Estimate (M)
Reconductor Bothell-SnoKing 230kV #1 & #2 with high temperature conductor	$3
Extend the Northern Intertie RAS to trip for the combined outage of the Chief Joseph-Monroe and Monroe-SnoKing-Echo Lake 500 kV lines	$3
Add a third Covington 500/230 kV transformer, a 500 kV terminal at Raver for the third Raver-Covington 500 kV line, and a 500 kV Bus at Covington	$60
Reconductor Delridge - Duwamish 230 kV Line with high temperature conductor	$2
6 ohm inductors on the two 115 kV cables out of SCL's Broad Street Substation	$13
Lakeside 230/115 kV transformer, rebuild both 115 kV Sammamish – Talbot lines to 230 kV energizing one line at 230 kV	$65
Total Preferred Projects	$146

* The majority of these estimates are preliminary estimates. More detailed estimates will be developed by the Puget Sound Area utilities.

Next Steps

Now that the overall south-to-north plan is complete, the individual transmission owners need to identify the parties responsible for each of the projects and agree on the cost allocation for the projects. After this has been completed, detailed feasibility studies, cost estimates, project timing, and schedules will be completed. In addition, the following project specific studies will be completed by the Puget Sound Area Study Team:

- North-to-South transfer conditions will be studied to determine the effect that the new preferred plan has on transfer capability and to determine if any additional projects are needed.
- Series Inductor Project: Studies need to be completed to determine the proper size for the series inductors, the impact on north-to-south transfers, and the preferred switching arrangement.
- Determine how long the proposed plan will last. The PSAST will grow the Northwest loads in the current 2020 base case to 2025 and 2030 load levels. The additional load will be served by eastern resources. TCRM and TTC values will be calculated to determine whether they may degrade over time.
- Northern Intertie RAS Expansion Project: The Puget Sound Area Study Team will be available to assist BPA and BC Hydro with any additional studies necessary to implement this RAS expansion.
- Covington Transformer Project: Additional studies will be completed by BPA, to further analyze alternative locations for this transformer addition, the need for a 500 kV switchyard at Covington, potential operational solutions, potential remedial action schemes, the size of the transformer, the impedance of the transformer, and the preferred connection to the 230 kV bus. The BPA studies will be coordinated with area utilities through the Puget Sound Area Study Team.

While the projects identified in this report improve the transfer capability through the Puget Sound Area, there remain curtailment risks for firm transfers during outage conditions (N-1-X). Consequently, the Puget Sound Area Study Team will continue to investigate cost effective ways to reduce the risk of firm curtailments.

Study Results

New winter south-to-north studies were completed for a variety of scenarios and the detailed study results are provided in Appendix A. The system performance for each scenario was compared using the following two measures in addition to cost and permitting feasibility:

1) ***Transmission Curtailment Risk Measure (TCRM):*** TCRM is a measure of the likelihood of experiencing curtailments of transfers between the Northwest and British Columbia. The higher the TCRM value the greater the exposure to curtailments. The TCRM analysis

includes the cases with all facilities in service as well as with any single facility out of service. A detailed description of the TCRM methodology is provided in the original report. In the original report, winter and summer conditions for both north-to-south and south-to-north transfers were studied. For this update, only winter conditions with south-to-north transfers were studied as that is the critical system state for the alternatives presented in this report.

2) ***Total Transfer Capability (TTC):*** The TTC (thermal only) of the Westside Northern Intertie (WSNI) was calculated for each of the options in the traditional way, with all lines in service. Only the winter south-to-north condition was studied, with 680 MW of generation operating in the Puget Sound Area. The specific generation unit assumptions are as described in Appendix J of the original report. Puget Sound Area generation during winter peak is between 950 MW and 1550 MW 80% of the time (when load has been greater than 6000MW along with temperature below 32 degrees F). With higher levels of Puget Sound Area generation, the TTC numbers shown in the tables would likely increase.

The major issues addressed in this study are the impacts of the various alternatives on the 115 kV system in the Seattle area, and the impacts of the various alternatives on the 230 kV system between the Maple Valley and SnoKing areas. In all cases, the other major projects as described in the original report are modeled, which include the Northern Intertie RAS expansion, third Covington transformer, and second Portal Way transformer. In addition, the Bothell-SnoKing rebuild project was included in most scenarios although sensitivity studies were conducted for the reconductor option which ended up being the preferred option. Provided below is a discussion of each of the major issues addressed by the study team and their conclusions.

1) 26 ohm versus 6 ohm series inductors

Table 1: Selected TCRM and TTC Results, 26 ohm inductors vs. 6 ohm inductors

Study #	Series Inductors on SCL's 115 kV Cables- 26 ohms	Series Inductors on SCL's 115 kV Cables- 6 ohms	Maple Valley-SnoKing High Temp	PSE's Sammamish - Lakeside - Talbot 115kV to 230kV Upgrade Project (Two Lines Operated at 230 kV)	Total TCRM - Without TCRM Lines Outside of the Puget Sound Area	Winter South North WSNI Thermal TTC at 680 MW Puget Sound Generation
3	X		X		10,304	2,270
4		X	X		8,433	2,297
17	X			X	10,460	1,773
18		X		X	8,666	2,038

With the changes in 115 kV line ratings, the Seattle 115 kV system is capable of accommodating greater flows. As a result, using a series inductor impedance greater than 6 ohms is no longer necessary to reduce the loadings on the Seattle 115 kV system. In fact, the TCRM is slightly better (lower) with the smaller 6 ohm inductors. Prior studies have also indicated that the smaller inductor size provided better results for summer north-to-south conditions. Higher impedance inductors also would have the undesirable effect of pushing more power over to the Maple Valley-SnoKing lines and reducing the TTC. In addition the smaller inductors require the addition of fewer shunt capacitors to offset the reactive losses from the inductors. The 6 ohm inductors have the effect of adding a circuit reactance that is equivalent to 8 miles of overhead 115 kV line. The 6 ohm inductors are now the preferred 115 kV project due to better performance and lower cost.

2) 6 ohm series inductors versus phase shifting transformers

Table 2: 6 ohm series inductors versus phase shifting transformers

Study #	SCL Phase Shifting Transformer	Series Inductors on SCL's 115 kV Cables- 6 ohms	Maple Valley-SnoKing High Temp	PSE's Sammamish - Lakeside - Talbot 115kV to 230kV Upgrade Project (Two Lines Operated at 230 kV)	Total TCRM - Without TCRM Lines Outside of the Puget Sound Area	Winter South North WSNI Thermal TTC at 680 MW Puget Sound Generation
1	X		X		13,122	2,455
4		X	X		8,433	2,297
15	X			X	11,500	2,136
18		X		X	8,666	2,038

The TCRM studies for the phase shifting transformer project may not reflect the true performance of this project due to the difficulty of accurately modeling the phase shifting transformer operating strategy. As a result, while the TCRM studies show poorer performance for the phase shifting transformers than for the series inductor project, the study team believes that this result is a shortcoming of the phase shifter modeling and, in fact, the phase shifters should perform as well or better than the series inductors. This was the conclusion of the TTC studies, where a benefit was observed when using the phase shifting transformers instead of fixed series inductors. However, as the incremental benefits are not believed to be sufficient to justify the higher capital and maintenance costs of the phase shifter option, the 6 ohm series inductors remain the recommended project.

3) 6 ohm series inductors versus adding a third 115 kV cable

Table 3: 6 ohm inductor versus adding a third 115 kV cable

Study #	Series Inductors on SCL's 115 kV Cables- 6 ohms	3rd 115 kV Underground Cable from Mass to Broad Street & Mass Bank 1 Energized	Maple Valley-SnoKing High Temp	PSE's Sammamish - Lakeside - Talbot 115kV to 230kV Upgrade Project (Two Lines Operated at 230 kV)	Total TCRM - Without TCRM Lines Outside of the Puget Sound Area	Winter South North WSNI Thermal TTC at 680 MW Puget Sound Generation
4	X		X		8,433	2,297
5		X	X		19,027	1,513
18	X			X	8,666	2,038
19		X		X	11,213	2,297

This option examines adding a third Seattle City Light 115 kV underground cable (a second cable from Broad Street to Massachusetts) in place of the 6 ohm inductors. The results for this alternative vary depending on whether the Sammamish-Lakeside-Talbot lines are upgraded to 230 kV or the Maple Valley-SnoKing lines are reconductored. With the preferred plan (upgrading the Sammamish-Lakeside-Talbot lines to 230 kV), there is a benefit to the alternative of adding a third cable from a TTC perspective and a slight benefit to the series inductor option from the TCRM perspective. Conversely, if the Maple Valley-SnoKing reconductor project moves forward, the series inductor option performs better from both a TCRM and TTC perspective. This is because if a third cable is added, there is still a need for the series inductors to eliminate overloading on the Broad Street-East Pine 115 kV cable, the East Pine-Maple Valley 230 kV line, and the Massachusetts 230/115 kV transformers. The third cable option is deemed to be less preferable to the recommended option primarily because the cost of the third cable is expected to far exceed the cost of the series inductors. In addition, the construction of an additional Broad-Massachusetts 115 kV cable is incompatible with Seattle City Light's future plan to add a new 230 kV cable as part of their North Downtown Substation

Project (North Downtown-Massachusetts 230 kV). The 6 ohm series inductors remain the preferred project due to better performance and lower cost.

4) ***6 Ohm Series inductors versus replacing cables***

Table 4: 6 ohm inductors versus replacing cables

Study #	Series Inductors on SCL's 115 kV Cables- 6 ohms	Replace SCL's Existing 115 kV Cables (no inductors)	Maple Valley-SnoKing High Temp	PSE's Sammamish - Lakeside - Talbot 115kV to 230kV Upgrade Project (Two Lines Operated at 230 kV)	Total TCRM - Without TCRM Lines Outside of the Puget Sound Area	Winter South North WSNI Thermal TTC at 680 MW Puget Sound Generation
4	X		X		8,433	2,297
6		X	X		19,398	1,602
18	X			X	8,666	2,038
20		X		X	11,746	2,210

If the 6 ohm inductors are in place, potential overloading on the cables is no longer an issue so rebuilding the cables would have no benefit. This option examines rebuilding the cables in lieu of the 6 ohm inductors. The results for this alternative vary depending on whether the Sammamish-Lakeside-Talbot lines are upgraded to 230 kV or the Maple Valley-SnoKing lines are reconductored. With the preferred plan (upgrading the Sammamish-Lakeside-Talbot lines to 230 kV), the series inductors perform better from a TCRM perspective and slightly worse from a TTC perspective. If the Maple Valley-SnoKing reconductor project moves forward then the series inductor option performs better from both a TCRM and TTC perspective. The TCRM performance is better for the series inductor options because if the cables are replaced, there would be other limits reached on the downtown Seattle system. The additional limits reached that account for most of the TCRM increase include the East Pine 230/115 kV transformer and the Massachusetts 230/115 kV transformers. The series inductors remain the preferred project due to better performance and lower cost.

5) 6 ohm *series inductors versus the Seattle City Light North Downtown Substation project with and without series inductors*

Table 5: 6 ohm inductors versus the Seattle City Light North Downtown Substation project with and without series inductors

Study #	Series Inductors on SCL's 115 kV Cables- 6 ohms	SCL's North Downtown Substation	SCL's North Downtown Substation (6 ohm inductors)	Maple Valley-SnoKing High Temp	PSE's Sammamish - Lakeside - Talbot 115kV to 230kV Upgrade Project (Two Lines Operated at 230 kV)	Total TCRM - Without TCRM Lines Outside of the Puget Sound Area	Winter South North WSNI Thermal TTC at 680 MW Puget Sound Generation
4	X			X		8,433	2,297
32		X		X		117,049	-1,380
36			X	X		8,778	2,672
18	X				X	8,666	2,038
34		X			X	38,594	-832
38			X		X	9,101	2,207

The study results indicate that the TCRM would increase dramatically and the TTC would be negative (not capable of south-to-north transfers) unless the series inductors are included in the plans for the new North Downtown Substation. The majority of this increase is due to overloading on the Broad-North Downtown 115 kV cable. As a result, the series inductors are needed before and after the addition of the North Downtown Substation Project.

6) **6 ohm series inductors:** ***Reinforcing Maple Valley–SnoKing 230 kV lines versus options to upgrade Sammamish-Lakeside-Talbot 115 kV lines versus Monroe-Echo Lake #2***

Table 6: 6 ohm inductors – Reinforcing Maple Valley–SnoKing 230 kV lines versus options to upgrade Sammamish-Lakeside-Talbot 115 kV lines versus Monroe-Echo Lake #2

Study #	Series Inductors on SCL's 115 kV Cables- 6 ohms	Maple Valley-SnoKing High Temp	Maple Valley-SnoKing Rebuild	PSE's Sammamish - Lakeside - Talbot 115kV to 230kV Upgrade Project (Two Lines Operated at 230 kV)	PSE's Sammamish - Lakeside - Talbot 115kV to 230kV Upgrade Project (One Line Operated at 230 kV)	Monroe-Echo Lake #2 500kV	Total TCRM - Without TCRM Lines Outside of the Puget Sound Area	Winter South North WSNI Thermal TTC at 680 MW Puget Sound Generation
4	X	X					8,433	2,297
11	X		X				7,623	2,632
18	X			X			8,666	2,038
28	X	X		X			9,003	2,700
81	X				X		13,422	1,643
80	X					X	5,047	2,875

The lowest TCRM and the highest TTC for line improvements east of Lake Washington can be achieved by building the Monroe-Echo Lake #2 500 kV line in addition to the 6 ohm series inductors. Unfortunately, this is also the highest cost transmission option.

From a TCRM perspective there is little difference between the Maple Valley – SnoKing reinforcement options and the Sammamish – Lakeside – Talbot upgrade project with two lines operated at 230 kV although the Maple Valley-SnoKing rebuild option performs slightly better than the others. From a TTC perspective, there is an advantage for the Maple Valley-SnoKing options; particularly the rebuild option. However, this was not deemed to be a sufficient advantage over the preferred Sammamish-Lakeside-Talbot 230 kV upgrade project with two lines operated at 230 kV. A major benefit of the Sammamish-Lakeside-Talbot options is that

they would provide necessary load service to Lakeside Substation which the Maple Valley-SnoKing options would not. Pursuing the Sammamish-Lakeside-Talbot options at this time does not preclude reconductoring the Maple Valley-SnoKing lines at a later time.

The Sammamish – Lakeside – Talbot upgrade project can defer some of its substation construction costs by initially upgrading the 115 kV lines to 230 kV and operating one line at 115 kV and one line at 230 kV. This option did not perform as well as operating both lines at 230 kV for both TCRM and TTC. The reduction in performance has been deemed acceptable for the cost savings. The second line planned to be cut-over to 230 kV operation at a later date.

7) **6 ohm series inductors and Sammamish-Lakeside-Talbot upgrade:** ***Bothell-SnoKing rebuild versus reconductor***

Table 7: 6 ohm series inductors and Sammamish-Lakeside-Talbot upgrade: Bothell-SnoKing rebuild versus reconductor

Study #	Series Inductors on SCL's 115 kV Cables- 6 ohms	PSE's Sammamish - Lakeside - Talbot 115kV to 230kV Upgrade Project (Two Lines Operated at 230 kV)	PSE's Sammamish - Lakeside - Talbot 115kV to 230kV Upgrade Project (One Line Operated at 230 kV)	Bothell - SnoKing Rebuild	Bothell - SnoKing High Temp Instead of Rebuild	Total TCRM - Without TCRM Lines Outside of the Puget Sound Area	Winter South North WSNI Thermal TTC at 680 MW Puget Sound Generation
18	X	X		X		8,666	2,038
47	X	X			X	9,512	2,086
81	X		X	X		13,422	1,643
82	X		X		X	13,663	1,677

For either Sammamish – Lakeside – Talbot upgrade option the TCRM and TTC results are similar for the Bothell-SnoKing rebuild and reconductoring options. The reconductor of the Bothell-SnoKing lines would provide acceptable performance at a lower cost with minimal permitting and mitigation requirements.

Appendix A

Table of TCRM and TTC Results

ColumbiaGrid PSAST Options for N-1-X TCRM Determination

	115 kV Reinforcement Options									230 kV & 500 kV Reinforcement Options							TCRM & TTC Values		
Study #	SCL Phase Shifting Transformer	Series Inductors on SCL's 115 kV Cables- 26 ohms	Series Inductors on SCL's 115 kV Cables- 6 ohms	3rd 115 kV Underground Cable from Mass to Broad Street & Mass Bank 1 Energized	Replace SCL's Existing 115 kV Cables (no inductors)	Replace SCL's Existing 115 kV Cables (6 ohm inductors)	SCL's North Downtown Substation	SCL's North Downtown Substation (6 ohm inductors)	Maple Valley-SnoKing High Temp	Maple Valley-SnoKing Rebuild	PSE's Sammamish - Lakeside - Talbot 115kV to 230kV Upgrade Project (Two Lines Operated at 230 kV)	PSE's Sammamish - Lakeside - Talbot 115kV to 230kV Upgrade Project (One Line Operated at 230 kV)	Monroe-Echo Lake #2 500kV	Bothell - SnoKing High Temp Instead of Rebuild	With Covington, Portalway, Extended RAS, Bothell - SnoKing Upgrade	Total TCRM - Without TCRM Lines Outside of the Puget Sound Area	TTC (Thermal Only)	Notes
54																308,343	-	PSAST 2020 Winter South-to-North Expansion Plan Base Case
24															X	73,898	920	
1	X								X						X	13,122	2455	
3		X							X						X	10,304	2270	
4			X						X						X	8,433	2297	
5				X					X						X	19,027	1513	
6					X				X						X	19,398	1602	
7						X			X						X	8,258	2448	
32							X		X						X	117,049	-1380	
36								X	X						X	8,778	2672	
8	X									X					X	14,039	2692	
10		X								X					X	12,659	2652	
11			X							X					X	7,623	2632	
12				X						X					X	13,172	1820	
13					X					X					X	13,012	2120	
14						X				X					X	7,423	2664	
33							X			X					X	82,697	-1350	
37								X		X					X	7,111	2708	
15	X										X				X	11,500	2136	
17		X									X				X	10,460	1773	
18			X								X				X	8,666	2038	
81			X									X			X	13,422	1643	
47			X								X			X	X	9,512	2086	
82			X									X		X	X	13,663	1677	Preferred Plan
19				X							X				X	11,213	2297	
20					X						X				X	11,746	2210	
21						X					X				X	8,666	2044	
34							X				X				X	38,594	-832	
38								X			X				X	9,101	2207	
49								X			X			X	X	10,286	2233	
25	X								X		X				X	9,664	2745	
27		X							X		X				X	9,288	2497	
28			X						X		X				X	9,003	2700	
29				X					X		X				X	11,460	2305	
30					X				X		X				X	12,395	2377	
31						X			X		X				X	9,003	2700	
35							X		X		X				X	38,463	-804	
39								X	X		X				X	9,296	2732	
56								X	X		X			X	X	10,285	2753	
22													X		X	13,501	2104	
40							X						X		X	46,466	-292	
41								X					X		X	4,143	2916	
80			X										X		X	5,047	2875	

EXHIBIT B
NOTICES

Any notice required under this MOA shall be in writing and shall be delivered in person; or with proof of receipt by a nationally recognized delivery service or by United States Certified Mail. Notices are effective when received. Either Party may change the name or address for receipt of notice by providing notice of such change. The Parties shall deliver notices to the following person and address:

If to Seattle City Light:

Attention:
Phone:
Fax:
Email:

If by First Class Mail:

City of Seattle, City Light Department
(Customer Address)
(Customer City, State, Zip)

If by Overnight Delivery Service:
City of Seattle, City Light Department
(Customer Address)
(Customer City, State, Zip)

If to BPA:

Attention:
Phone:
Fax:
Email:

If by First Class Mail:

Bonneville Power Administration
P.O. Box 61409
Vancouver, WA 98666-1409

If by Overnight Delivery Service:
Bonneville Power Administration – TSE/TPP-2
7500 NE 41st Street – Suite 130
Vancouver, WA 98662

If to the Puget:

Attention:
Phone:
Fax:
Email:

If by First Class Mail:

Puget Sound Energy, Inc.
P.O. Box 97034
Bellevue, WA 98009-9734

If by Overnight Delivery Service:
Puget Sound Energy, Inc.
10885 N.E. 4th Street, Suite 1100
Bellevue, WA 98004-5591

From: Timberman,Toni L (BPA) - TSE-TPP-2
To: Gibson,Paula L (BPA) - TSES-TPP-2
Subject: RE: 16053_PSE-SCL-PSANI MOA SCOPE CHANGE LTR AGMT
Date: Thursday, July 17, 2014 8:33:00 AM

Ok – thanks. Can you please put a DRAFT watermark on it, accept all changes and send to me in as a clean draft?

From: Gibson,Paula L (BPA) - TSES-TPP-2
Sent: Thursday, July 17, 2014 8:17 AM
To: Timberman,Toni L (BPA) - TSE-TPP-2
Subject: RE: 16053_PSE-SCL-PSANI MOA SCOPE CHANGE LTR AGMT

Here are the changes.

From: Timberman,Toni L (BPA) - TSE-TPP-2
Sent: Wednesday, July 16, 2014 4:02 PM
To: Gibson,Paula L (BPA) - TSES-TPP-2
Subject: 16053_PSE-SCL-PSANI MOA SCOPE CHANGE LTR AGMT

Thanks Paula – couple more changes.

Department of Energy

Bonneville Power Administration
P.O. Box 61409
Vancouver, WA 98666-1409

TRANSMISSION SERVICES

July ~~3~~22, 2014

In reply refer to: TSE/TPP-2

Contract No. 14TX-16053
Letter Agreement

Ms. Booga Gilbertson
Vice President, Operations Services
Puget Sound Energy, Inc.
10885 NE 4th Street, PSE – 11S
Bellevue, WA 98004

Mr. Phillip West
Customer Service Energy Officer
City of Seattle, City Light Department
700 Fifth Avenue, Suite 2822
Seattle, WA 98104-5031

Dear Ms. Gilbertson and Mr. West:

The Bonneville Power Administration (BPA), Puget Sound Energy, Inc. (PSE) and City of Seattle, City Light Department (SCL) are parties to the Memorandum of Agreement (MOA), Contract No. 11TX-15450, relating to the Preferred Puget Sound Area Plan of Service Projects and Cost Allocation. The parties to the MOA are currently in the initial stages of development of the projects described in the MOA. As this has progressed, certain aspects of the MOA were identified that the parties believe need to be clarified.

This ~~Letter~~ Agreement is intended to clarify the scope changes related to the Covington 500 kV Transformer Addition Project described in Section 3(a) of the MOA and the Bothell to SnoKing Reconductor Project described in Section 3(c) of the MOA.

BPA's transformer addition originally planned for Covington ~~s~~Substation has been moved to Raver ~~s~~Substation. There is no change in financial responsibility under the MOA due to this relocation.

The Bothell to SnoKing Reconductor Project was identified in the MOA as an SCL project. However, during subsequent discussions it was discovered that BPA owns the first ½ mile of these lines on the SnoKing end. BPA will rebuild its owned portion of these lines at its cost, including any necessary replacement of equipment within SnoKing ~~s~~Substation associated with these lines.

Formatted: Font color: Auto

Formatted: Font color: Auto

Formatted: Font color: Auto

In order to meet the project schedule, please sign all originals of this Agreement, retain one original for your records and return the remaining two originals to my attention at one of the following addresses at your earliest convenience, but not later than Close of Business on August 20, 2014:

First Class Mail	Overnight Delivery Service
Bonneville Power Administration Mail Stop: TSE/TPP-2 P.O. Box 61409 Vancouver, WA 98666-1409	Bonneville Power Administration Mail Stop: TSE/TPP-2 7500 NE 41st Street – Suite 130 Vancouver, WA 98662

Formatted: Font: Century Schoolbook

Formatted: Font: Century Schoolbook

BPA will ensure that Puget and SCL have a full set of original signature pages.

If you have any questions, please call me at (360) 619-6015.

Sincerely,

Toni L. Timberman
Senior Transmission Account Executive
Transmission Sales

CONCUR:

PUGET SOUND ENERGY, INC.

By: _____

Name: _____
(Print/Type)

Title: _____

Date: _____

CITY OF SEATTLE,
CITY LIGHT DEPARTMENT

By: _____

Name: _____
(Print/Type)

Title: _____

Date: _____

bcc:
C. Olsen– KSC-TPP-1
B. Bennett – LT-7
J. Weiss – TPCV-/COVINGTON
T. Timberman – TSE-/TPP-2
P. Gibson – TSES-/TPP-2
Customer File – TS~~E~~/-TPP-2 (TM-11, Puget Sound Energy, Inc.)
Customer File – TSE-/TPP-2 (TM-11, City of Seattle, City Light Department.)
Official File – CCM Support

(W:\CT\Puget Sound Energy, Inc\Drafts\16053_PSE-SCL-PSANI MOA SCOPE CHANGE LTR AGMT.Doc)

Formatted: Font: 8 pt

From: Timberman,Toni L (BPA) - TSE-TPP-2
To: Moffett,Justin T (BPA) - KEC-4
Subject: RE: please review draft NEPA SEPA letter
Date: Thursday, July 17, 2014 8:51:00 AM

I am on a conf. call from 10:30-11:30 but am just listening in – stop by and I will jump off the call. 2nd floor TPP – west end on the window wall. If you come in through the double doors turn left and walk straight ahead and you will end up in my office.

From: Moffett,Justin T (BPA) - KEC-4
Sent: Thursday, July 17, 2014 8:49 AM
To: Timberman,Toni L (BPA) - TSE-TPP-2
Subject: RE: please review draft NEPA SEPA letter

Hi Toni,
I've got a meeting at OPP from 10-11am this morning. Are you free at 11? I thought I might stop by to introduce myself and chat about PSANI for a minute.
Thanks.

Justin T. Moffett, PWS
Environmental Protection Specialist | KEC-4
BONNEVILLE POWER ADMINISTRATION
bpa.gov | P 503-230-3233 | C 503-758-2088

From: Timberman,Toni L (BPA) - TSE-TPP-2
Sent: Wednesday, July 16, 2014 4:27 PM
To: Moffett,Justin T (BPA) - KEC-4
Subject: RE: please review draft NEPA SEPA letter

Couple of weeks if possible, so I can then send to SCL and Puget for their review to see if it meets their needs. Maybe first week of August?

From: Moffett,Justin T (BPA) - KEC-4
Sent: Wednesday, July 16, 2014 4:26 PM
To: Timberman,Toni L (BPA) - TSE-TPP-2
Subject: RE: please review draft NEPA SEPA letter

Will do. It might take a bit to get some time w/ Hub. How soon do you need this?

Justin T. Moffett, PWS
Environmental Protection Specialist | KEC-4
BONNEVILLE POWER ADMINISTRATION
bpa.gov | P 503-230-3233 | C 503-758-2088

From: Timberman,Toni L (BPA) - TSE-TPP-2
Sent: Wednesday, July 16, 2014 4:20 PM
To: Moffett,Justin T (BPA) - KEC-4
Subject: please review draft NEPA SEPA letter

Justin, see attached draft letter to Puget and Seattle regarding NEPA and SEPA treatment for the PSANI projects.

I took a swing at putting the proper language in the second paragraph, but please work with Hub to modify it as needed.

Also, please add your name and phone number as a contact in the last paragraph.

Thanks for your help with this –

Toni

Toni L. Timberman
Senior Transmission Account Executive
Bonneville Power Administration
(360) 619-6015 office
(b) (6)
tltimberman@bpa.gov

From:	Gibson,Paula L (BPA) - TSES-TPP-2
To:	Timberman,Toni L (BPA) - TSE-TPP-2
Subject:	RE: 16053_PSE-SCL-PSANI MOA SCOPE CHANGE LTR AGMT
Date:	Thursday, July 17, 2014 8:55:18 AM
Attachments:	16053_PSE-SCL-PSANI MOA SCOPE CHANGE LTR AGMT.doc

Final draft with watermark

From: Timberman,Toni L (BPA) - TSE-TPP-2
Sent: Thursday, July 17, 2014 8:33 AM
To: Gibson,Paula L (BPA) - TSES-TPP-2
Subject: RE: 16053_PSE-SCL-PSANI MOA SCOPE CHANGE LTR AGMT

Ok – thanks. Can you please put a DRAFT watermark on it, accept all changes and send to me in as a clean draft?

From: Gibson,Paula L (BPA) - TSES-TPP-2
Sent: Thursday, July 17, 2014 8:17 AM
To: Timberman,Toni L (BPA) - TSE-TPP-2
Subject: RE: 16053_PSE-SCL-PSANI MOA SCOPE CHANGE LTR AGMT

Here are the changes.

From: Timberman,Toni L (BPA) - TSE-TPP-2
Sent: Wednesday, July 16, 2014 4:02 PM
To: Gibson,Paula L (BPA) - TSES-TPP-2
Subject: 16053_PSE-SCL-PSANI MOA SCOPE CHANGE LTR AGMT

Thanks Paula – couple more changes.

Department of Energy

Bonneville Power Administration
P.O. Box 61409
Vancouver, WA 98666-1409

TRANSMISSION SERVICES

July 22, 2014

In reply refer to: TSE/TPP-2

Contract No. 14TX-16053
Letter Agreement

Ms. Booga Gilbertson
Vice President, Operations Services
Puget Sound Energy, Inc.
10885 NE 4th Street, PSE – 11S
Bellevue, WA 98004

Mr. Phillip West
Customer Service Energy Officer
City of Seattle, City Light Department
700 Fifth Avenue, Suite 2822
Seattle, WA 98104-5031

Dear Ms. Gilbertson and Mr. West:

The Bonneville Power Administration (BPA), Puget Sound Energy, Inc, (PSE) and City of Seattle, City Light Department (SCL) are parties to the Memorandum of Agreement (MOA), Contract No. 11TX-15450, relating to the Preferred Puget Sound Area Plan of Service Projects and Cost Allocation. The parties to the MOA are currently in the initial stages of development of the projects described in the MOA. As this has progressed, certain aspects of the MOA were identified that the parties believe need to be clarified.

This Agreement is intended to clarify the scope changes related to the Covington 500 kV Transformer Addition Project described in Section 3(a) of the MOA and the Bothell to SnoKing Reconductor Project described in Section 3(c) of the MOA.

BPA's transformer addition originally planned for Covington Substation has been moved to Raver Substation. There is no change in financial responsibility under the MOA due to this relocation.

The Bothell to SnoKing Reconductor Project was identified in the MOA as an SCL project. However, during subsequent discussions it was discovered that BPA owns the first ½ mile of these lines on the SnoKing end. BPA will rebuild its owned portion of these lines at its cost, including any necessary replacement of equipment within SnoKing Substation associated with these lines.

In order to meet the project schedule, please sign all originals of this Agreement, retain one original for your records and return the remaining two originals to my attention at one of the following addresses at your earliest convenience, but not later than Close of Business on August 30, 2014:

First Class Mail	Overnight Delivery Service
Bonneville Power Administration Mail Stop: TSE/TPP-2 P.O. Box 61409 Vancouver, WA 98666-1409	Bonneville Power Administration Mail Stop: TSE/TPP-2 7500 NE 41st Street – Suite 130 Vancouver, WA 98662

BPA will ensure that Puget and SCL have a full set of original signature pages.

If you have any questions, please call me at (360) 619-6015.

Sincerely,

Toni L. Timberman
Senior Transmission Account Executive
Transmission Sales

CONCUR:

PUGET SOUND ENERGY, INC.

By: _____

Name: _____
(Print/Type)

Title: _____

Date: _____

CITY OF SEATTLE,
CITY LIGHT DEPARTMENT

By: _____

Name: _____
(Print/Type)

Title: _____

Date: _____

bcc:
C. Olsen– KSC-TPP-1
B. Bennett – LT-7
J. Weiss – TPCV/COVINGTON
T. Timberman – TSE/TPP-2
P. Gibson – TSES/TPP-2
Customer File – TS/-TPP-2 (TM-11, Puget Sound Energy, Inc.)
Customer File – TSE/TPP-2 (TM-11, City of Seattle, City Light Department.)
Official File – CCM Support

(W:\CT\Puget Sound Energy, Inc\Drafts\16053_PSE-SCL-PSANI MOA SCOPE CHANGE LTR AGMT.Doc)

From: Lynard,Gene P (BPA) - KEC-4
To: Timberman,Toni L (BPA) - TSE-TPP-2
Cc: Marleau,Michael L (BPA) - TEP-TPP-1; Moffett,Justin T (BPA) - KEC-4
Subject: RE: PSANI Project (PSE Eastside) - Use of BPA Funds
Date: Thursday, July 17, 2014 11:23:07 AM

I have reviewed these documents and have spoken to Michael and he said that what you have stated is true and he will be working with Justin to develop the proper language to include in your draft letter to PSE. Understand that we should have what you are seeking sometime early next week.

From: Timberman,Toni L (BPA) - TSE-TPP-2
Sent: Thursday, July 17, 2014 9:06 AM
To: Lynard,Gene P (BPA) - KEC-4; Moffett,Justin T (BPA) - KEC-4
Cc: Marleau,Michael L (BPA) - TEP-TPP-1
Subject: PSANI Project (PSE Eastside) - Use of BPA Funds

Hi Gene and Justin,

Please take a look at the attached draft Letter Agreement between BPA and Puget.

(b) (5) [redacted]

Puget said that their attorney had been talking to Hub Adams about the Eastside project but I don't know any details.

After I have the four letters clarifying the MOA in final form I need to take them up through the approval process before signing. Probably Richard Shaheen and Hardev Juj will need to give approval.

I have attached the MOA for your reference.

Thanks,
Toni
X6015

From:	Timberman,Toni L (BPA) - TSE-TPP-2
To:	Jusupovic,Jana D (BPA) - TPC-TPP-4; Holst,Michele R (BPA) - TEPO-TPP-1; Shier,Robert P (BPA) - FRG-2
Cc:	Gibson,Paula L (BPA) - TSES-TPP-2
Subject:	RE: help please on FTC for PSANI MOA
Date:	Friday, July 18, 2014 11:26:00 AM

Ok – thanks! I will report out to Puget and Seattle next week that we are working on it.

From: Jusupovic,Jana D (BPA) - TPC-TPP-4
Sent: Friday, July 18, 2014 11:25 AM
To: Timberman,Toni L (BPA) - TSE-TPP-2; Holst,Michele R (BPA) - TEPO-TPP-1; Shier,Robert P (BPA) - FRG-2
Cc: Gibson,Paula L (BPA) - TSES-TPP-2
Subject: RE: help please on FTC for PSANI MOA

Thank you Toni for getting the ball rolling!
Just letting you know the earliest meeting we could set up internally for this issue is the week of the 28th.
Once we have that meeting as a team we'll circle back with you, since we know you're on annual leave that week.

From: Timberman,Toni L (BPA) - TSE-TPP-2
Sent: Wednesday, July 16, 2014 6:05 PM
To: Jusupovic,Jana D (BPA) - TPC-TPP-4; Holst,Michele R (BPA) - TEPO-TPP-1; Shier,Robert P (BPA) - FRG-2
Cc: Gibson,Paula L (BPA) - TSES-TPP-2
Subject: help please on FTC for PSANI MOA

I have attached the PSANI MOA, Contract No. 11TX-15450, and my very rough draft attempt at a letter agreement intended to meet the requirement in Section 7 of the MOA, to develop method and schedule for exchange of funds.

I have pasted in bits of language from the standard BPA Financial Terms and Conditions that is included with our reimbursable agreements with customers…but this is a different animal, and I don't know quite how to structure it.

I listed the issues that we need to capture in this agreement…please add more as needed.

Any help you can provide would be much appreciated. I would like to have a draft to send to Puget and Seattle by August 15 if possible.

Thanks,
Toni

Contract No. 11TX-15450

MEMORANUDUM OF AGREEMENT

executed by the

UNITED STATES OF AMERICA

DEPARTMENT OF ENERGY

acting by and through the

BONNEVILLE POWER ADMINISTRATION

and

THE CITY OF SEATTLE

acting by and through its

CITY LIGHT DEPARTMENT

and

PUGET SOUND ENERGY, INC.

(Relating to the Preferred Puget Sound Area Plan of Service Projects and Cost Allocation)

This MEMORANDUM OF AGREEMENT (MOA) is executed by the UNITED STATES OF AMERICA, Department of Energy, acting by and through the BONNEVILLE POWER ADMINISTRATION (BPA), THE CITY OF SEATTLE, acting by and through its CITY LIGHT DEPARTMENT (Seattle City Light), and PUGET SOUND ENERGY INC. (Puget). BPA, Seattle City Light, and Puget are sometimes referred to individually as "Party" and collectively as "Parties".

WHEREAS, BPA owns and is responsible for the reliable operation of the Federal Columbia River Transmission System (FCRTS),

WHEREAS, Seattle City Light and Puget each own and operate electric systems that are interconnected with the FCRTS in the Puget Sound Area and electric power is delivered within those electric systems, and to or from them by BPA over the FCRTS,

WHEREAS, the Puget Sound Area experiences periods of transmission congestion that may require mitigation to maintain reliable operation of the Puget Sound Area Interconnection, including in some cases, curtailments of firm transmission service,

WHEREAS, as of February 2011, the Parties entered into Contract No. 11TX-15290, "Temporary Operational Support Program Agreement," that provides for voluntary changes in planned generation, including an increase in Puget Sound Area generation, as temporary and short-term measures for relieving forecasted transmission congestion conditions that are expected to adversely affect the reliable operation of the Puget Sound Area Interconnection,

WHEREAS, representatives from each of the Parties and other entities participated in regional studies to develop a long term plan, and implement a range of physical improvements to preserve the reliable operation of the Puget Sound Area interconnection, and reduce the need to curtail firm transmission service,

WHEREAS, the Parties have identified the projects described herein that, when taken as a whole, are expected to preserve the reliable operation of the Puget Sound Area Interconnection, and reduce the need to curtail firm transmission service; and it is in their individual and collective interests to continue to support the efforts needed to carry out these projects, and

WHEREAS, the transmission congestion affecting the Puget Sound Area interconnection is a shared problem, and the projects and cost sharing arrangements provided herein are appropriate.

NOW THEREFORE, in consideration of the mutual obligations and undertakings herein, the sufficiency of which is acknowledged, the Parties agree as follows:

1. DEFINITIONS

(a) "Bothell to SnoKing Reconductor Project" means the project identified in the Preferred Plan of Service in which Seattle City Light will reconductor the existing Bothell to SnoKing No. 1 and No. 2 230 kV lines with high-temperature conductor.

(b) "BPA Preferred Plan Projects" means, collectively, the Covington 500 kV Transformer Addition Project and the Northern Intertie Remedial Action Scheme ("RAS") Improvement Project.

(c) "Broad Street Inductor Project" means the project identified in the Preferred Plan of Service in which Seattle City Light will add series inductors (up to 10 ohm) to the Massachusetts-Broad Street 115 kV line.

(d) "ColumbiaGrid" means the Washington non-profit membership corporation formed to improve the operational efficiency, reliability, and planned expansion of the Pacific Northwest transmission grid, the

eight members of which, as of the Effective Date, are Avista Corporation; BPA; Public Utility District No. 1 of Chelan County, Washington; Public Utility District No. 2 of Grant County, Washington; Puget; Seattle City Light; Public Utility District No. 1 of Snohomish County, Washington; and Tacoma Power.

(e) "Covington 500 kV Transformer Addition Project" means the project identified in the Preferred Plan of Service in which BPA will install a third 500–230 kV transformer at the BPA Covington Substation.

(f) "Delridge to Duwamish Reconductor Project" means the project identified in the Preferred Plan of Service in which Seattle City Light will reconductor the existing Delridge to Duwamish 230 kV line with high-temperature conductor.

(g) "Lakeside 230 kV Transformer Addition Project" means the project identified in the Preferred Plan of Service in which Puget will install a 230–115 kV transformer at the Puget Lakeside Substation.

(h) "Maple Valley to SnoKing Reconductor Project" means the project identified in the Preferred Plan of Service in which Seattle City Light will reconductor the existing Maple Valley to SnoKing 230 kV line with high-temperature conductor.

(i) "North Downtown Inductor Project" means the project identified in the Preferred Plan of Service in which Seattle City Light will add series inductors (up to 10 ohm) to the East Pine-Broad Street line as part of Seattle City Light's North Downtown Substation Project.

(j) "Northern Intertie RAS Improvement Project" means the project identified in the Preferred Plan of Service in which BPA will install new software for and re-wire electrical protection devices on the Northern Intertie RAS.

(k) "Northern Intertie RAS" means the existing BPA pre-programmed set of automatic operating steps that are designed to protect the regional high voltage electric grid in the event of a loss of one of the two Custer-Monroe 500 kV lines.

(l) "Preferred Plan of Service" means the "Updated Recommended Transmission Expansion Plan for the Puget Sound Area to Support Winter South-to-North Transfers" approved by ColumbiaGrid on October 28, 2011, a copy of which is attached as Exhibit A to this MOA.

(m) "Preferred Plan Projects" means, collectively, the BPA Preferred Plan Projects, the Puget Preferred Plan Projects, and the Seattle City Light Preferred Plan Projects.

(n) "Puget Preferred Plan Projects" means the Sammamish to Lakeside to Talbot Rebuild Project and the Lakeside 230 kV Transformer Addition Project.

(o) "Sammamish to Lakeside to Talbot Rebuild Project" means the project identified in the Preferred Plan of Service in which Puget will upgrade Puget's existing Sammamish to Lakeside to Talbot 115 kV lines to 230 kV operation using Puget's existing Sammamish to Lakeside to Talbot utility corridor.

(p) "Seattle City Light Preferred Plan Projects" means the Bothell to SnoKing Reconductor Project, the Broad Street Inductor Project, the North Downtown Inductor Project, and the Delridge to Duwamish Reconductor Project.

2. TERM

The term of this MOA shall be effective on the date of execution by all Parties (Effective Date) and shall continue until the earliest to occur of the following: (i) the date of completion of the last of the Preferred Plan Projects; (ii) a Party terminates this MOA pursuant to section 5(c) of this MOA; or (iii) December 31, 2020.

3. PREFERRED PLAN OF SERVICE PROJECTED PROJECT COMPLETION SCHEDULE AND COST

(a) **BPA Preferred Plan Projects**. Each Party acknowledges that, as of the Effective Date, the projected project completions schedule and capital costs of the BPA Preferred Plan Projects are as follows:

BPA Preferred Plan Project	Projected Completion	Projected Capital Cost
1. Covington 500 kV Transformer Addition Project	2018	$56.2 million
2. Northern Intertie RAS Improvement Project	2014	$4.0 million

(b) **Puget Preferred Plan Projects.** Each Party acknowledges that, as of the Effective Date, the projected project completions schedule and capital costs of the Puget Preferred Plan Projects are as follows:

Puget Preferred Plan Project	Projected Completion	Projected Capital Cost
1. Sammamish to Lakeside to Talbot Rebuild Project	2017	$45.0 million (single circuit) or $41.3 million (double circuit)
2. Lakeside 230 kV Transformer Addition Project	2017	$22.0 million

(c) **Seattle City Light Preferred Plan Projects.** Each Party acknowledges that, as of the Effective Date, the projected project completions schedule and capital costs of the Seattle City Light Preferred Plan Projects are as follows:

Seattle City Light Preferred Plan Project	Projected Completion	Projected Capital Cost
1. Bothell to SnoKing Reconductor Project	2017	$2.5 million
2. Broad Street Inductor Project	2017	$7.3 million*
3. North Downtown Inductor Project	2017	$4.4 million*
4. Delridge to Duwamish Reconductor Project	2016	$1.9 million

(d) **Preferred Plan Project Not Planned for Construction Based On the Construction of the Puget Preferred Plan Projects.** Each Party acknowledges that, the construction of the Puget Preferred Plan Projects negates the need for the construction of the Maple Valley to

* The projected capital costs of the Broad Street Inductor Project and the North Downtown Inductor Project do not reflect any projected costs for land acquisition. As of the Effective Date, the Parties acknowledge that Seattle City Light may have to acquire land to accomplish the Broad Street Inductor Project, and the actual capital costs of the Broad Street Inductor Project will, if necessary, reflect the actual costs of land acquisition for such project. As of the Effective Date, the Parties do not anticipate that the North Downtown Inductor Project will require Seattle City Light to acquire any land.

SnoKing Reconductor Project. Each Party acknowledges that, as of the Effective Date, the projected project completions schedule and capital costs of the Maple Valley to SnoKing Reconductor Project are as follows:

Preferred Plan Project	Projected Completion	Projected Capital Cost
Maple Valley to SnoKing Reconductor Project	N/A	$16.1 million

4. PRELIMINARY CAPITAL COST ALLOCATION

As of the Effective Date of this MOA, the Parties agree to share in the capital costs of Preferred Plan Projects as follows:

(a) **BPA Preferred Plan Projects**. BPA shall pay the entire actual capital cost of each of (i) the Covington 500 kV Transformer Addition Project and (ii) the Northern Intertie RAS Improvement Project

(b) **Seattle City Light Preferred Plan Projects.** BPA, Puget, and Seattle City Light shall each pay one-third of the total actual capital cost of each of (i) the Bothell to SnoKing Reconductor Project; (ii) the Delridge to Duwamish Reconductor Project; (iii) the Broad Street Inductor Project; and (iv) the North Downtown Inductor Project.

(c) **Puget Preferred Plan Projects.** BPA and Seattle City Light shall each pay to Puget an amount equal to one-third of the adjusted projected capital cost of the Maple Valley to SnoKing Reconductor Project, which adjusted projected capital cost shall be determined as provided in the following table:

Projected Capital Cost of the Maple Valley to SnoKing Reconductor Project	=	$16.1 million * Cost Differences in Reconductor Projects

where:

Cost Differences in Reconductor Projects	=	the quotient of

(i) the sum of the actual capital costs of the Delridge to Duwamish Reconductor Project and Bothell to SnoKing Reconductor Project and

(ii) the sum of the projected capital costs of the Delridge to Duwamish Reconductor Project and Bothell to SnoKing Reconductor Project identified in section 3(c) above (i.e., $4.4 million)

5. FINAL CAPITAL COST ALLOCATION AND OPTION OF ELECTION TO CANCEL

(a) The allocations identified in section 4 are based on preliminary planning capital cost projections. The final capital cost allocation for the Seattle City Light Preferred Plan Projects shall be based on actual design and construction capital costs for each of the Seattle City Light Preferred Plan Projects, and the final capital cost allocation for the Puget Preferred Plan Projects shall be in accordance with the formula proscribed in section 4(a) above. The Parties shall review such actual design and construction capital costs and schedules and shall agree in writing to the final capital cost allocation.

(b) Each Party reserves the right to cancel any Preferred Plan Project for which such Party is the sponsor if such Party determines that

(i) the actual capital cost of such Preferred Plan Project is likely to exceed the projected capital cost of such Preferred Plan Project by a factor that is equal to or in excess of thirty percent (30%), or

(ii) the projected in-service date of the Preferred Plan Project will be more than twenty-four (24) months later than the projected completion date identified in section 3 above for such Preferred Plan Project.

If a Party elects to cancel a Preferred Plan Project for which such Party is a sponsor under this section 5(b), such Party shall provide written notice to such other Parties within five (5) days of such election. Within a reasonable period of time after receipt of such written notice, representatives of the Parties shall convene and identify alternative projects that the Parties expect will preserve the reliable operation of the Puget Sound Area Interconnection and reduce the need to curtail firm transmission service in a manner similar to the project cancelled pursuant to section 5(b). If the Parties cannot agree in good faith upon an alternative project to replace a project cancelled pursuant to section 5(b) within a reasonable period following receipt of written notice of

such termination, then any Party may terminate this MOA upon 90 days' written notice to the other Parties.

6. RESPONSIBILITY FOR ALL OTHER COSTS

(a) Each Party shall be solely responsible for the Preferred Plan Project for which such Party is the sponsor, less the contributions from the other Parties as provided in section 4. This MOA only affects the cost sharing for the Preferred Plan Projects.

(b) Each Party shall own the assets for the Preferred Plan Project for which such Party is the sponsor and shall be solely responsible for the operation and maintenance costs of such assets. Each Party shall be entitled to any capacity increases to its transmission system that results from any assets installed pursuant to this MOA.

(c) If any Party enhances a Preferred Plan Project after completion of such Preferred Plan Project to meet such Party's needs, the cost of such future enhancements shall be borne solely by such Party. Each Party shall attempt in good faith to coordinate with the other Parties with respect to any future enhancements to a Preferred Plan Project to minimize or eliminate any impact to the interconnected electric systems of such other Parties.

7. PAYMENT SCHEDULE

Payments will be made at the completion of individual projects. The Parties shall agree in writing to the method and schedule for the cost share contributions to be made under this MOA.

8. NATIONAL ENVIRONMENTAL POLICY ACT ASSESSMENT

To the extent that BPA's financial contributions under this MOA are determined to trigger the need for analysis of projects under the National Environmental Policy Act, the Parties shall coordinate such assessment.

9. JOINT COMMUNICATIONS

The Parties shall coordinate joint communications regarding presentations of the preferred plan of service to the public.

10. GENERAL PROVISIONS

(a) This MOA, including documents expressly incorporated by reference, constitutes the entire agreement between the Parties. It supersedes all previous communications, representations, or contracts, either written or oral, which purport to describe or embody the subject matter of this MOA.

(b) No amendment of this MOA shall be of any force or effect unless set forth in a written instrument signed by authorized representatives of each Party.

(c) This MOA is made and entered into for the sole benefit of the Parties, and the Parties intend that no other person or entity shall be a direct or indirect beneficiary of this MOA.

(d) This MOA shall be interpreted consistent with and governed by federal law.

(e) In the event that any provision of this MOA is determined to be invalid or unenforceable for any reason, in whole or part, the remaining provisions of this MOA shall be unaffected thereby and shall remain in full force and effect to the fullest extent permitted by law, and such invalid or unenforceable provision shall be replaced by the Parties with a provision that is valid and enforceable and that comes closest to expressing the Parties' intention with respect to such invalid or unenforceable provision.

(f) Each Party shall be solely responsible for and shall pay its own costs and expenses incurred by it in connection with the negotiation of this MOA.

(g) Whenever this MOA requires or provides that (i) a notice be given by a Party to any other Party or (ii) a Party's action requires the approval or consent of any other Party, such notice, consent or approval shall be given in writing and shall be given in accordance with the provisions of Exhibit B to this MOA.

(h) This MOA is binding on any successors and assigns of the Parties. No Party may otherwise transfer or assign this MOA, in whole or in part, without the other Parties' written consent. Such consent shall not be unreasonably withheld.

(i) Nothing contained in this MOA shall be construed as creating a corporation, company, partnership, association, joint venture or other entity, nor shall anything contained in this MOA be construed as

creating or requiring any fiduciary relationship between the Parties. No Party shall be responsible hereunder for the acts or omissions of any other Party. Nothing herein shall preclude (i) a Party from taking any action (or having its affiliates take any action) with respect to any other transmission project, including any such project that may compete with the projects provided herein, or (ii) the Parties jointly from entering into MOAs with third parties for the joint development, construction, ownership or operation of any project or for the provision of transmission capacity from such project.

(j) Other than the obligation to pay amounts due under Section 4, in no event shall any Party be liable to any other Party under any provision of this MOA for any losses, damages, costs or expenses for any direct, special, indirect, incidental, consequential, or punitive damages, including but not limited to loss of profit or revenue, whether based in whole or in part in contract or in tort, including negligence, strict liability, or any other theory of liability; provided, however, that damages for which a Party may be liable to any other Party under another agreement will not be considered to be special, indirect, incidental, or consequential damages hereunder.

(k) The Parties shall not be in breach of their respective obligations to the extent the failure to fulfill any obligation is due to an Uncontrollable Force. "Uncontrollable Force" means an event beyond the reasonable control of, and without the fault or negligence of, the Party claiming the Uncontrollable Force, that prevents that Party from performing its contractual obligations under this MOA and which, by exercise of that party's reasonable care, diligence and foresight, such Party was unable to avoid. Uncontrollable Forces include, but are not limited to:

(1) strikes or work stoppage;

(2) floods, earthquakes, or other natural disasters; terrorist acts; and

(3) final orders or injunctions issued by a court or regulatory body having competent subject matter jurisdiction which the Party claiming the Uncontrollable Force, after diligent efforts, was unable to have stayed, suspended, or set aside pending review by a court of competent subject matter jurisdiction.

Neither the unavailability of funds or financing, nor conditions of national or local economies or markets shall be considered an Uncontrollable Force. The economic hardship of a Party shall not

constitute an Uncontrollable Force. Nothing contained in this provision shall be construed to require any Party to settle any strike or labor dispute in which it may be involved.

If an Uncontrollable Force prevents a Party from performing any of its obligations under this MOA, such party shall: (1) immediately notify the other Parties of such Uncontrollable Force by any means practicable and confirm such notice in writing as soon as reasonably practicable; (2) use its best efforts to mitigate the effects of such Uncontrollable Force, remedy its inability to perform, and resume full performance of its obligation hereunder as soon as reasonably practicable; (3) keep the other Parties apprised of such efforts on an ongoing basis; and (4) provide written notice of the resumption of performance. Written notices sent under this section 10(k) must comply with Exhibit B, Notices and Contact Information.

11. WAIVER

No waiver of any provision or breach of this MOA shall be effective unless such waiver is in writing and signed by the waiving Party, and any such waiver shall not be deemed a waiver of any other provision of this MOA or any other breach of this MOA.

12. SIGNATURE

The Parties have caused this MOA to be executed as of the latest date all Parties have signed this MOA.

CITY OF SEATTLE CITY LIGHT DEPARTMENT		UNITED STATES OF AMERICA Department of Energy Bonneville Power Administration	
By:	Jorge Carrasco	By:	Harder Juj
Name: *(Print/ Type)*	Jorge Carrasco	Name: *(Print/ Type)*	Harder Juj
Title:	Superintendent	Title:	VP, Planning + Asset Mgmt.
Date:	1/31/12	Date:	1/31/12

PUGET SOUND ENERGY, INC.

By: Susan McLain

Name: Susan McLain
(Print/ Type)

Title: Senior Vice President Delivery Operations

Date: 1/31/12

EXHIBIT A
PREFERRED PLAN OF SERVICE

EXHIBIT B
NOTICES

Any notice required under this MOA shall be in writing and shall be delivered in person; or with proof of receipt by a nationally recognized delivery service or by United States Certified Mail. Notices are effective when received. Either Party may change the name or address for receipt of notice by providing notice of such change. The Parties shall deliver notices to the following person and address:

If to Seattle City Light:

Attention:
Phone:
Fax:
Email:

If by First Class Mail:

City of Seattle, City Light Department
(Customer Address)
(Customer City, State, Zip)

If by Overnight Delivery Service:
City of Seattle, City Light Department
(Customer Address)
(Customer City, State, Zip)

If to BPA:

Attention:
Phone:
Fax:
Email:

If by First Class Mail:

Bonneville Power Administration
P.O. Box 61409
Vancouver, WA 98666-1409

If by Overnight Delivery Service:
Bonneville Power Administration – TSE/TPP-2
7500 NE 41st Street – Suite 130
Vancouver, WA 98662

If to the Puget:

Attention:
Phone:
Fax:
Email:

If by First Class Mail:

Puget Sound Energy, Inc.
P.O. Box 97034
Bellevue, WA 98009-9734

If by Overnight Delivery Service:
Puget Sound Energy, Inc.
10885 N.E. 4th Street, Suite 1100
Bellevue, WA 98004-5591

EXHIBIT A
PREFERRED PLAN OF SERVICE

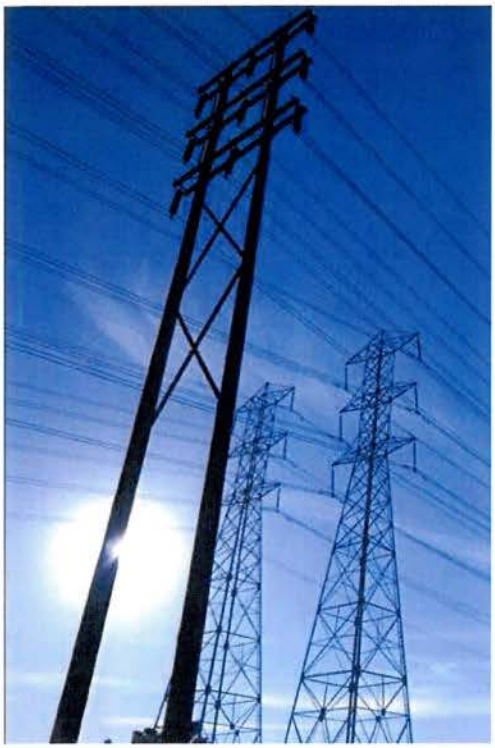

Updated Recommended Transmission Expansion Plan for the Puget Sound Area to Support Winter South-to-North Transfers

ColumbiaGrid

Puget Sound Area Study Team

Bonneville Power Administration, Puget Sound Energy, Seattle City Light, Snohomish County PUD, Tacoma Power, Powerex

Provisional Approval by the Study Team on April 25, 2011

Final Approval by the Study Team on October 28, 2011

Introduction and Conclusions

In October of 2010, the Puget Sound Area Study Team issued a report entitled "Transmission Expansion Plan for the Puget Sound Area." The report is available via the ColumbiaGrid website. The report details a transmission plan for the Puget Sound region that would, as a basic requirement, provides for reliable system performance while significantly improving the ability of the transmission grid to support power transfers between the Northwest and British Columbia. Since the release of the original report, the following changes have occurred that have led to the need for the Puget Sound Area Study Team to revise their transmission plan:

1) ***Additional scenarios*** – The Puget Sound area utilities have been meeting regularly since the publication of the original report in October 2010 and have developed several additional scenarios to be studied (e.g., the addition of a new Broad Street-Massachusetts 115 kV underground cable). In response, the study team repeated their prior analysis for the critical winter south-to-north condition for the new scenarios. The results of this analysis are shown in the table provided in Appendix A.

2) ***Increased likelihood that Puget Sound Energy will move forward with Sammamish-Lakeside-Talbot project*** – Since the development of the original plan, Puget Sound Energy has further developed their plan to rebuild two 115 kV lines to 230 kV (Sammamish-Lakeside-Talbot #1 and #2) and provide new 230/115 kV transformation at their Lakeside Substation. Although both lines will be rebuilt, only one of the lines may be initially energized at 230 kV. As stated in the prior report, this facility addition can delay the need to reconductor the Maple Valley-SnoKing 230 kV lines beyond the ten-year transmission planning horizon.

   The study team decided that since Puget Sound Energy is moving forward with this plan, the Sammamish-Lakeside-Talbot project should be listed as the proposed project in the plan instead of the Maple Valley-SnoKing reconductor. This project will give Puget Sound Energy the ability to provide necessary load support at Lakeside which cannot be achieved with the Maple Valley-SnoKing reconductor project, while providing similar Transmission Curtailment Risk Measure (TCRM) benefits as the Maple Valley-SnoKing reconductor project. A downside of the Sammamish-Lakeside-Talbot project is that its south-to-north Total Transfer Capability (TTC) is lower as compared to the Maple Valley-SnoKing reconductor. However, the Sammamish-Lakeside-Talbot project has additional benefits over the Maple Valley-SnoKing reconductor project in that it provides an additional 230 kV transmission path through the Puget Sound area and makes it feasible to reconductor rather than rebuild the Bothell-SnoKing 230 kV lines.

3) ***Increased likelihood that Seattle City Light will move forward with their North Downtown Substation Project*** – Since the development of the plan, Seattle City Light has indicated that plans to add a new North Downtown Substation have become more likely. The final plan is still being developed by SCL. The option studied includes a new underground cable (North Downtown-Massachusetts 230 kV), a new 115 kV line between North Downtown and Canal, and two 230/115 kV transformers at the proposed substation (see the following Figure One). This project was studied in the prior plan and, as identified previously, a third set of series inductors will be required on the new Canal-North Downtown 115 kV line with the addition of the North Downtown Substation. The plan for the system without, or prior to, the addition of the North Downtown Substation remains the same (adding series inductors on the two 115 kV underground cables). There is not a significant impact on the plan with or without the North Downtown Substation project as long as the project includes a third set of series inductors on the new North Downtown-Canal 115 kV line.

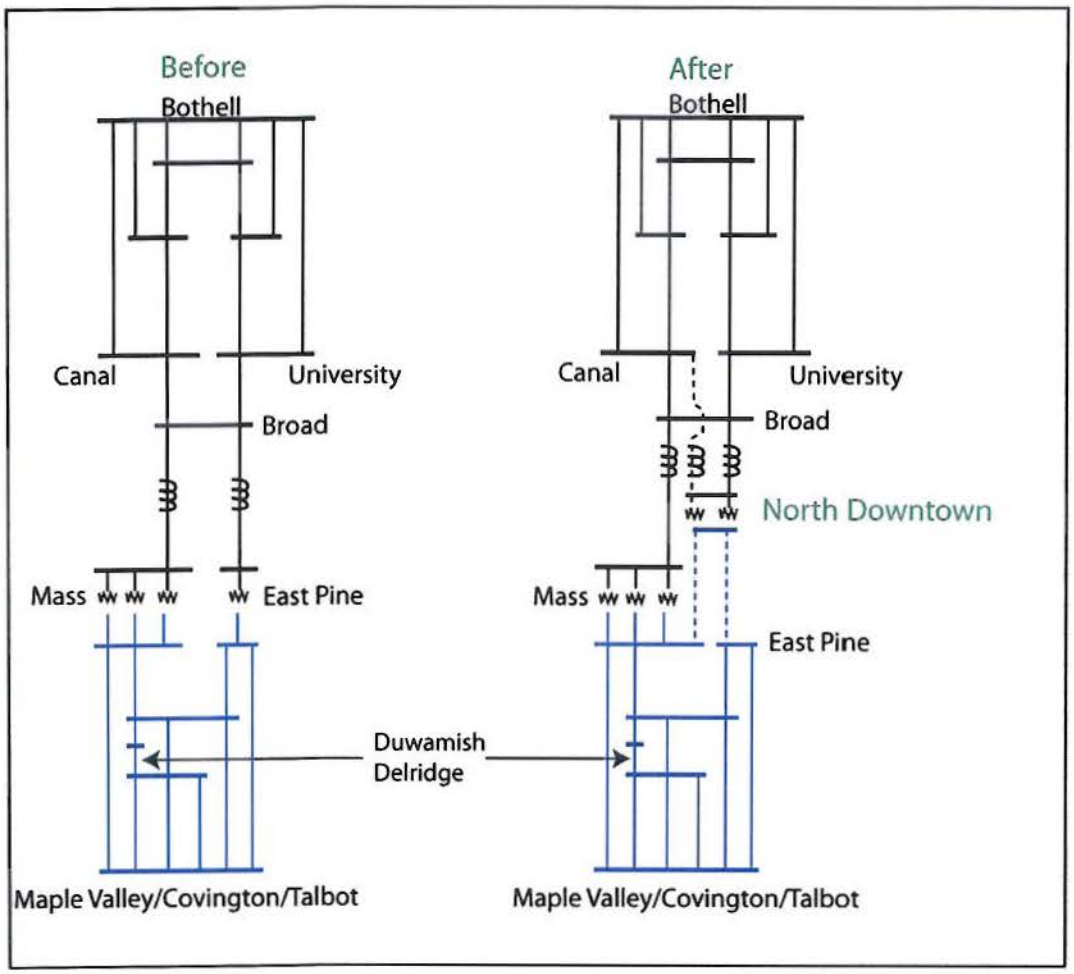

Figure One: One-Line Diagram with the proposed locations of the series inductor additions, before and after the Seattle City Light North Downtown Substation Project.

4) ***Seattle area line rating increases*** – Several key transmission lines in the region have been rerated to a higher capability. In some cases the new ratings provide a 77% increase over the ratings that were utilized in the original study. This has enabled the study team to reduce the size of the series inductors (from 26 ohms to 6 ohms) that were proposed for the Seattle City Light 115 kV transmission lines and cables. The smaller inductors lead to more power flowing through the Seattle City Light system resulting in the need to include an additional facility reconductor in the plan; the Duwamish-Delridge 230 kV line. The cost of this additional reconductor is estimated to be relatively low ($1.6 million). This additional cost is projected to be partially offset by the savings achieved by the installation of smaller inductors. The smaller inductors also reduce the need to add shunt capacitors to offset the reactive losses from the larger sized inductors.

5) ***Seattle City Light Update to TPS Settings*** - Seattle City Light has recently updated the TPS settings which have resulted in operational changes that preclude it from being used as a project in this study to reduce TCRM and increase TTC levels on the northern intertie. All results that use the previous scheme have not been included in this report.

As a result of the above changes, the plan to support south-to-north transfers has been revised as specified in this report. Additional transmission facilities, such as a second Portal Way 230/115 kV transformer, will likely be necessary to support north-to-south transfers. These additional facilities will be further analyzed in subsequent studies.

Overview of Revised Plan

As a result of the above changes, the Transmission Expansion Plan for the Puget Sound Area was revised and the new plan is shown in the following Figure Two:

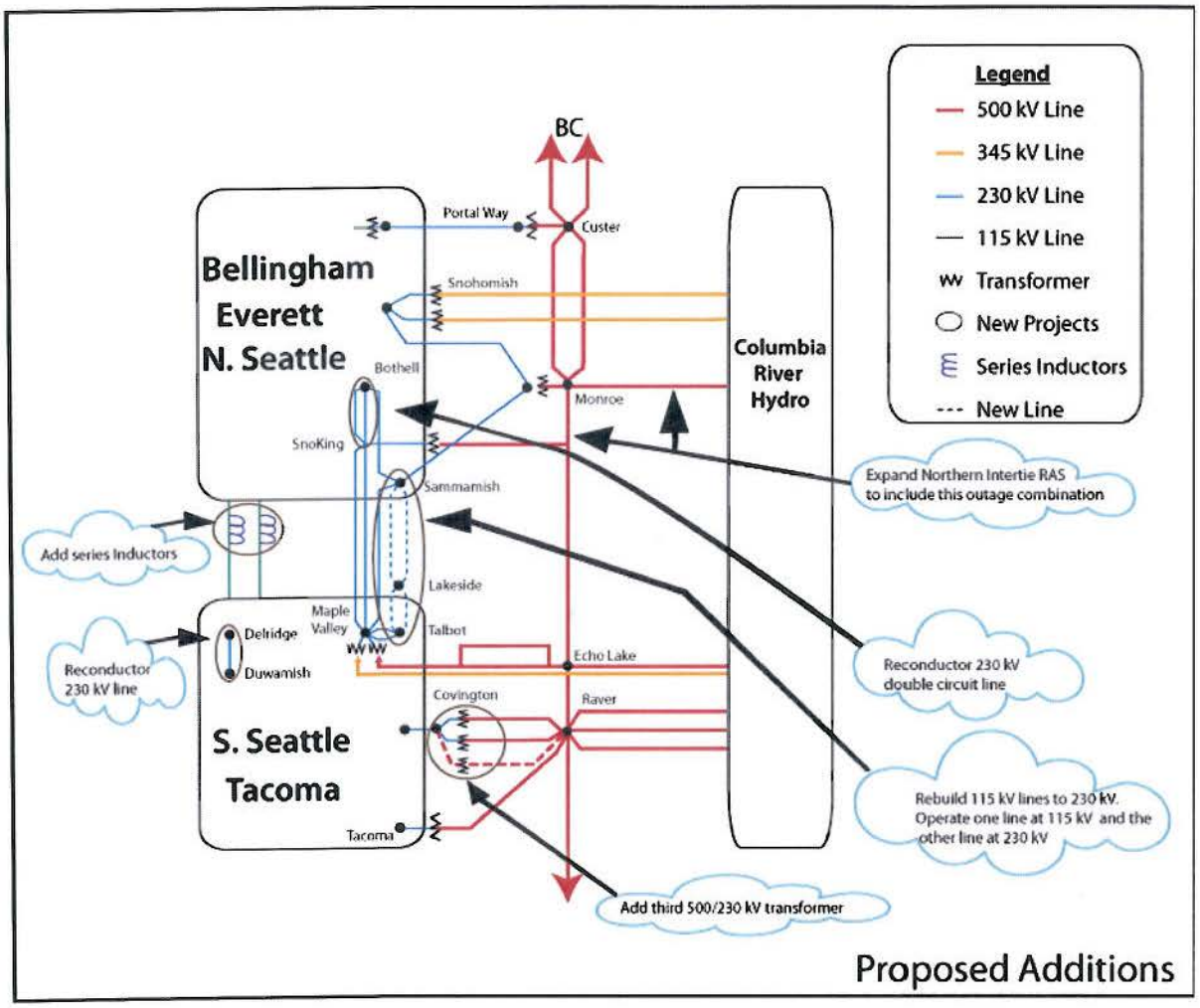

Figure Two: Revised Puget Sound Area Transmission Expansion Plan for Supporting South-to-North Transfers

Projects included in the Puget Sound Area Transmission Expansion Plan to support south-to-north transfers are:

- Reconductor the double circuit Bothell-SnoKing 230 kV lines with high temperature conductor
- Expand the Northern Intertie RAS
- Add a third Covington 500/230 kV transformer
- Reconductor the Delridge-Duwamish 230 kV line
- Add series inductors to the Massachusetts-Union-Broad and East Pine-Broad 115 kV lines in the downtown Seattle system. The final inductor size is under study and may vary from the 6 ohms specified in this report. Each line may have a different inductor size to optimize the system.
- Rebuild both the Sammamish-Lakeside-Talbot 115 kV lines to 230 kV. Energize one line at 230 kV and the other at 115 kV.

The cost estimates for the project in the preferred plan are shown in the following table. It should be noted that portions of the projects may be planned for local utility service and may not be necessary to accomplish the transfer capability goals of this study.

PSAST Preferred South-to-North Plan Cost Estimate	
	Cost Estimate (M)
Reconductor Bothell-SnoKing 230kV #1 & #2 with high temperature conductor	$3
Extend the Northern Intertie RAS to trip for the combined outage of the Chief Joseph-Monroe and Monroe-SnoKing-Echo Lake 500 kV lines	$3
Add a third Covington 500/230 kV transformer, a 500 kV terminal at Raver for the third Raver-Covington 500 kV line, and a 500 kV Bus at Covington	$60
Reconductor Delridge - Duwamish 230 kV Line with high temperature conductor	$2
6 ohm inductors on the two 115 kV cables out of SCL's Broad Street Substation	$13
Lakeside 230/115 kV transformer, rebuild both 115 kV Sammamish – Talbot lines to 230 kV energizing one line at 230 kV	$65
Total Preferred Projects	$146

* The majority of these estimates are preliminary estimates. More detailed estimates will be developed by the Puget Sound Area utilities.

Next Steps

Now that the overall south-to-north plan is complete, the individual transmission owners need to identify the parties responsible for each of the projects and agree on the cost allocation for the projects. After this has been completed, detailed feasibility studies, cost estimates, project timing, and schedules will be completed. In addition, the following project specific studies will be completed by the Puget Sound Area Study Team:

- North-to-South transfer conditions will be studied to determine the effect that the new preferred plan has on transfer capability and to determine if any additional projects are needed.
- Series Inductor Project: Studies need to be completed to determine the proper size for the series inductors, the impact on north-to-south transfers, and the preferred switching arrangement.
- Determine how long the proposed plan will last. The PSAST will grow the Northwest loads in the current 2020 base case to 2025 and 2030 load levels. The additional load will be served by eastern resources. TCRM and TTC values will be calculated to determine whether they may degrade over time.
- Northern Intertie RAS Expansion Project: The Puget Sound Area Study Team will be available to assist BPA and BC Hydro with any additional studies necessary to implement this RAS expansion.
- Covington Transformer Project: Additional studies will be completed by BPA, to further analyze alternative locations for this transformer addition, the need for a 500 kV switchyard at Covington, potential operational solutions, potential remedial action schemes, the size of the transformer, the impedance of the transformer, and the preferred connection to the 230 kV bus. The BPA studies will be coordinated with area utilities through the Puget Sound Area Study Team.

While the projects identified in this report improve the transfer capability through the Puget Sound Area, there remain curtailment risks for firm transfers during outage conditions (N-1-X). Consequently, the Puget Sound Area Study Team will continue to investigate cost effective ways to reduce the risk of firm curtailments.

Study Results

New winter south-to-north studies were completed for a variety of scenarios and the detailed study results are provided in Appendix A. The system performance for each scenario was compared using the following two measures in addition to cost and permitting feasibility:

1) ***Transmission Curtailment Risk Measure (TCRM):*** TCRM is a measure of the likelihood of experiencing curtailments of transfers between the Northwest and British Columbia. The higher the TCRM value the greater the exposure to curtailments. The TCRM analysis

includes the cases with all facilities in service as well as with any single facility out of service. A detailed description of the TCRM methodology is provided in the original report. In the original report, winter and summer conditions for both north-to-south and south-to-north transfers were studied. For this update, only winter conditions with south-to-north transfers were studied as that is the critical system state for the alternatives presented in this report.

2) ***Total Transfer Capability (TTC):*** The TTC (thermal only) of the Westside Northern Intertie (WSNI) was calculated for each of the options in the traditional way, with all lines in service. Only the winter south-to-north condition was studied, with 680 MW of generation operating in the Puget Sound Area. The specific generation unit assumptions are as described in Appendix J of the original report. Puget Sound Area generation during winter peak is between 950 MW and 1550 MW 80% of the time (when load has been greater than 6000MW along with temperature below 32 degrees F). With higher levels of Puget Sound Area generation, the TTC numbers shown in the tables would likely increase.

The major issues addressed in this study are the impacts of the various alternatives on the 115 kV system in the Seattle area, and the impacts of the various alternatives on the 230 kV system between the Maple Valley and SnoKing areas. In all cases, the other major projects as described in the original report are modeled, which include the Northern Intertie RAS expansion, third Covington transformer, and second Portal Way transformer. In addition, the Bothell-SnoKing rebuild project was included in most scenarios although sensitivity studies were conducted for the reconductor option which ended up being the preferred option. Provided below is a discussion of each of the major issues addressed by the study team and their conclusions.

1) 26 ohm versus 6 ohm series inductors

Table 1: Selected TCRM and TTC Results, 26 ohm inductors vs. 6 ohm inductors

Study #	Series Inductors on SCL's 115 kV Cables- 26 ohms	Series Inductors on SCL's 115 kV Cables- 6 ohms	Maple Valley-SnoKing High Temp	PSE's Sammamish - Lakeside - Talbot 115kV to 230kV Upgrade Project (Two Lines Operated at 230 kV)	Total TCRM - Without TCRM Lines Outside of the Puget Sound Area	Winter South North WSNI Thermal TTC at 680 MW Puget Sound Generation
3	X		X		10,304	2,270
4		X	X		8,433	2,297
17	X			X	10,460	1,773
18		X		X	8,666	2,038

With the changes in 115 kV line ratings, the Seattle 115 kV system is capable of accommodating greater flows. As a result, using a series inductor impedance greater than 6 ohms is no longer necessary to reduce the loadings on the Seattle 115 kV system. In fact, the TCRM is slightly better (lower) with the smaller 6 ohm inductors. Prior studies have also indicated that the smaller inductor size provided better results for summer north-to-south conditions. Higher impedance inductors also would have the undesirable effect of pushing more power over to the Maple Valley-SnoKing lines and reducing the TTC. In addition the smaller inductors require the addition of fewer shunt capacitors to offset the reactive losses from the inductors. The 6 ohm inductors have the effect of adding a circuit reactance that is equivalent to 8 miles of overhead 115 kV line. The 6 ohm inductors are now the preferred 115 kV project due to better performance and lower cost.

2) 6 ohm series inductors versus phase shifting transformers

Table 2: 6 ohm series inductors versus phase shifting transformers

Study #	SCL Phase Shifting Transformer	Series Inductors on SCL's 115 kV Cables- 6 ohms	Maple Valley-SnoKing High Temp	PSE's Sammamish - Lakeside - Talbot 115kV to 230kV Upgrade Project (Two Lines Operated at 230 kV)	Total TCRM - Without TCRM Lines Outside of the Puget Sound Area	Winter South North WSNI Thermal TTC at 680 MW Puget Sound Generation
1	X		X		13,122	2,455
4		X	X		8,433	2,297
15	X			X	11,500	2,136
18		X		X	8,666	2,038

The TCRM studies for the phase shifting transformer project may not reflect the true performance of this project due to the difficulty of accurately modeling the phase shifting transformer operating strategy. As a result, while the TCRM studies show poorer performance for the phase shifting transformers than for the series inductor project, the study team believes that this result is a shortcoming of the phase shifter modeling and, in fact, the phase shifters should perform as well or better than the series inductors. This was the conclusion of the TTC studies, where a benefit was observed when using the phase shifting transformers instead of fixed series inductors. However, as the incremental benefits are not believed to be sufficient to justify the higher capital and maintenance costs of the phase shifter option, the 6 ohm series inductors remain the recommended project.

3) 6 ohm series inductors versus adding a third 115 kV cable

Table 3: 6 ohm inductor versus adding a third 115 kV cable

Study #	Series Inductors on SCL's 115 kV Cables- 6 ohms	3rd 115 kV Underground Cable from Mass to Broad Street & Mass Bank 1 Energized	Maple Valley-SnoKing High Temp	PSE's Sammamish - Lakeside - Talbot 115kV to 230kV Upgrade Project (Two Lines Operated at 230 kV)	Total TCRM - Without TCRM Lines Outside of the Puget Sound Area	Winter South North WSNI Thermal TTC at 680 MW Puget Sound Generation
4	X		X		8,433	2,297
5		X	X		19,027	1,513
18	X			X	8,666	2,038
19		X		X	11,213	2,297

This option examines adding a third Seattle City Light 115 kV underground cable (a second cable from Broad Street to Massachusetts) in place of the 6 ohm inductors. The results for this alternative vary depending on whether the Sammamish-Lakeside-Talbot lines are upgraded to 230 kV or the Maple Valley-SnoKing lines are reconductored. With the preferred plan (upgrading the Sammamish-Lakeside-Talbot lines to 230 kV), there is a benefit to the alternative of adding a third cable from a TTC perspective and a slight benefit to the series inductor option from the TCRM perspective. Conversely, if the Maple Valley-SnoKing reconductor project moves forward, the series inductor option performs better from both a TCRM and TTC perspective. This is because if a third cable is added, there is still a need for the series inductors to eliminate overloading on the Broad Street-East Pine 115 kV cable, the East Pine-Maple Valley 230 kV line, and the Massachusetts 230/115 kV transformers. The third cable option is deemed to be less preferable to the recommended option primarily because the cost of the third cable is expected to far exceed the cost of the series inductors. In addition, the construction of an additional Broad-Massachusetts 115 kV cable is incompatible with Seattle City Light's future plan to add a new 230 kV cable as part of their North Downtown Substation

Project (North Downtown-Massachusetts 230 kV). The 6 ohm series inductors remain the preferred project due to better performance and lower cost.

4) ***6 Ohm Series inductors versus replacing cables***

Table 4: 6 ohm inductors versus replacing cables

Study #	Series Inductors on SCL's 115 kV Cables- 6 ohms	Replace SCL's Existing 115 kV Cables (no inductors)	Maple Valley-SnoKing High Temp	PSE's Sammamish - Lakeside - Talbot 115kV to 230kV Upgrade Project (Two Lines Operated at 230 kV)	Total TCRM - Without TCRM Lines Outside of the Puget Sound Area	Winter South North WSNI Thermal TTC at 680 MW Puget Sound Generation
4	X		X		8,433	2,297
6		X	X		19,398	1,602
18	X			X	8,666	2,038
20		X		X	11,746	2,210

If the 6 ohm inductors are in place, potential overloading on the cables is no longer an issue so rebuilding the cables would have no benefit. This option examines rebuilding the cables in lieu of the 6 ohm inductors. The results for this alternative vary depending on whether the Sammamish-Lakeside-Talbot lines are upgraded to 230 kV or the Maple Valley-SnoKing lines are reconductored. With the preferred plan (upgrading the Sammamish-Lakeside-Talbot lines to 230 kV), the series inductors perform better from a TCRM perspective and slightly worse from a TTC perspective. If the Maple Valley-SnoKing reconductor project moves forward then the series inductor option performs better from both a TCRM and TTC perspective. The TCRM performance is better for the series inductor options because if the cables are replaced, there would be other limits reached on the downtown Seattle system. The additional limits reached that account for most of the TCRM increase include the East Pine 230/115 kV transformer and the Massachusetts 230/115 kV transformers. The series inductors remain the preferred project due to better performance and lower cost.

5) 6 ohm *series inductors versus the Seattle City Light North Downtown Substation project with and without series inductors*

Table 5: 6 ohm inductors versus the Seattle City Light North Downtown Substation project with and without series inductors

Study #	Series Inductors on SCL's 115 kV Cables- 6 ohms	SCL's North Downtown Substation	SCL's North Downtown Substation (6 ohm inductors)	Maple Valley-SnoKing High Temp	PSE's Sammamish - Lakeside - Talbot 115kV to 230kV Upgrade Project (Two Lines Operated at 230 kV)	Total TCRM - Without TCRM Lines Outside of the Puget Sound Area	Winter South North WSNI Thermal TTC at 680 MW Puget Sound Generation
4	X			X		8,433	2,297
32		X		X		117,049	-1,380
36			X	X		8,778	2,672
18	X				X	8,666	2,038
34		X			X	38,594	-832
38			X		X	9,101	2,207

The study results indicate that the TCRM would increase dramatically and the TTC would be negative (not capable of south-to-north transfers) unless the series inductors are included in the plans for the new North Downtown Substation. The majority of this increase is due to overloading on the Broad-North Downtown 115 kV cable. As a result, the series inductors are needed before and after the addition of the North Downtown Substation Project.

6) **6 ohm series inductors:** ***Reinforcing Maple Valley–SnoKing 230 kV lines versus options to upgrade Sammamish-Lakeside-Talbot 115 kV lines versus Monroe-Echo Lake #2***

Table 6: 6 ohm inductors – Reinforcing Maple Valley–SnoKing 230 kV lines versus options to upgrade Sammamish-Lakeside-Talbot 115 kV lines versus Monroe-Echo Lake #2

Study #	Series Inductors on SCL's 115 kV Cables- 6 ohms	Maple Valley-SnoKing High Temp	Maple Valley-SnoKing Rebuild	PSE's Sammamish - Lakeside - Talbot 115kV to 230kV Upgrade Project (Two Lines Operated at 230 kV)	PSE's Sammamish - Lakeside - Talbot 115kV to 230kV Upgrade Project (One Line Operated at 230 kV)	Monroe-Echo Lake #2 500kV	Total TCRM - Without TCRM Lines Outside of the Puget Sound Area	Winter South North WSNI Thermal TTC at 680 MW Puget Sound Generation
4	X	X					8,433	2,297
11	X		X				7,623	2,632
18	X			X			8,666	2,038
28	X	X		X			9,003	2,700
81	X				X		13,422	1,643
80	X					X	5,047	2,875

The lowest TCRM and the highest TTC for line improvements east of Lake Washington can be achieved by building the Monroe-Echo Lake #2 500 kV line in addition to the 6 ohm series inductors. Unfortunately, this is also the highest cost transmission option.

From a TCRM perspective there is little difference between the Maple Valley – SnoKing reinforcement options and the Sammamish – Lakeside – Talbot upgrade project with two lines operated at 230 kV although the Maple Valley-SnoKing rebuild option performs slightly better than the others. From a TTC perspective, there is an advantage for the Maple Valley-SnoKing options; particularly the rebuild option. However, this was not deemed to be a sufficient advantage over the preferred Sammamish-Lakeside-Talbot 230 kV upgrade project with two lines operated at 230 kV. A major benefit of the Sammamish-Lakeside-Talbot options is that

they would provide necessary load service to Lakeside Substation which the Maple Valley-SnoKing options would not. Pursuing the Sammamish-Lakeside-Talbot options at this time does not preclude reconductoring the Maple Valley-SnoKing lines at a later time.

The Sammamish – Lakeside – Talbot upgrade project can defer some of its substation construction costs by initially upgrading the 115 kV lines to 230 kV and operating one line at 115 kV and one line at 230 kV. This option did not perform as well as operating both lines at 230 kV for both TCRM and TTC. The reduction in performance has been deemed acceptable for the cost savings. The second line planned to be cut-over to 230 kV operation at a later date.

7) **6 ohm series inductors and Sammamish-Lakeside-Talbot upgrade:** ***Bothell-SnoKing rebuild versus reconductor***

Table 7: 6 ohm series inductors and Sammamish-Lakeside-Talbot upgrade: Bothell-SnoKing rebuild versus reconductor

Study #	Series Inductors on SCL's 115 kV Cables- 6 ohms	PSE's Sammamish - Lakeside - Talbot 115kV to 230kV Upgrade Project (Two Lines Operated at 230 kV)	PSE's Sammamish - Lakeside - Talbot 115kV to 230kV Upgrade Project (One Line Operated at 230 kV)	Bothell - SnoKing Rebuild	Bothell - SnoKing High Temp Instead of Rebuild	Total TCRM - Without TCRM Lines Outside of the Puget Sound Area	Winter South North WSNI Thermal TTC at 680 MW Puget Sound Generation
18	X	X		X		8,666	2,038
47	X	X			X	9,512	2,086
81	X		X	X		13,422	1,643
82	X		X		X	13,663	1,677

For either Sammamish – Lakeside – Talbot upgrade option the TCRM and TTC results are similar for the Bothell-SnoKing rebuild and reconductoring options. The reconductor of the Bothell-SnoKing lines would provide acceptable performance at a lower cost with minimal permitting and mitigation requirements.

Appendix A

Table of TCRM and TTC Results

ColumbiaGrid PSAST Options for N-1-X TCRM Determination

	115 kV Reinforcement Options									230 kV & 500 kV Reinforcement Options							TCRM & TTC Values		
Study #	SCL Phase Shifting Transformer	Series Inductors on SCL's 115 kV Cables- 26 ohms	Series Inductors on SCL's 115 kV Cables- 6 ohms	3rd 115 kV Underground Cable from Mass to Broad Street & Mass Bank 1 Energized	Replace SCL's Existing 115 kV Cables (no inductors)	Replace SCL's Existing 115 kV Cables (6 ohm inductors)	SCL's North Downtown Substation	SCL's North Downtown Substation (6 ohm inductors)	Maple Valley-SnoKing High Temp	Maple Valley-SnoKing Rebuild	PSE's Sammamish - Lakeside - Talbot 115kV to 230kV Upgrade Project (Two Lines Operated at 230 kV)	PSE's Sammamish - Lakeside - Talbot 115kV to 230kV Upgrade Project (One Line Operated at 230 kV)	Monroe-Echo Lake #2 500kV	Bothell - SnoKing High Temp Instead of Rebuild	With Covington, Portalway, Extended RAS, Bothell - SnoKing Upgrade	Total TCRM - Without TCRM Lines Outside of the Puget Sound Area	TTC (Thermal Only)	Notes
54																308,343	-	PSAST 2020 Winter South-to-North Expansion Plan Base Case
24															X	73,898	920	
1	X								X						X	13,122	2455	
3		X							X						X	10,304	2270	
4			X						X						X	8,433	2297	
5				X					X						X	19,027	1513	
6					X				X						X	19,398	1602	
7						X			X						X	8,258	2448	
32							X		X						X	117,049	-1380	
36								X	X						X	8,778	2672	
8	X									X					X	14,039	2692	
10		X								X					X	12,659	2652	
11			X							X					X	7,623	2632	
12				X						X					X	13,172	1820	
13					X					X					X	13,012	2120	
14						X				X					X	7,423	2664	
33							X			X					X	82,697	-1350	
37								X		X					X	7,111	2708	
15	X										X				X	11,500	2136	
17		X									X				X	10,460	1773	
18			X								X				X	8,666	2038	
81			X									X			X	13,422	1643	
47			X								X			X	X	9,512	2086	
82			X									X		X	X	13,663	1677	Preferred Plan
19				X							X				X	11,213	2297	
20					X						X				X	11,746	2210	
21						X					X				X	8,666	2044	
34							X				X				X	38,594	-832	
38								X			X				X	9,101	2207	
49								X			X			X	X	10,286	2233	
25	X								X		X				X	9,664	2745	
27		X							X		X				X	9,288	2497	
28			X						X		X				X	9,003	2700	
29				X					X		X				X	11,460	2305	
30					X				X		X				X	12,395	2377	
31						X			X		X				X	9,003	2700	
35							X		X		X				X	38,463	-804	
39								X	X		X				X	9,296	2732	
56								X	X		X			X	X	10,285	2753	
22													X		X	13,501	2104	
40							X						X		X	46,466	-292	
41								X					X		X	4,143	2916	
80			X										X		X	5,047	2875	

EXHIBIT B
NOTICES

Any notice required under this MOA shall be in writing and shall be delivered in person; or with proof of receipt by a nationally recognized delivery service or by United States Certified Mail. Notices are effective when received. Either Party may change the name or address for receipt of notice by providing notice of such change. The Parties shall deliver notices to the following person and address:

If to Seattle City Light:

Attention:
Phone:
Fax:
Email:

If by First Class Mail:

City of Seattle, City Light Department
(Customer Address)
(Customer City, State, Zip)

If by Overnight Delivery Service:
City of Seattle, City Light Department
(Customer Address)
(Customer City, State, Zip)

If to BPA:

Attention:
Phone:
Fax:
Email:

If by First Class Mail:

Bonneville Power Administration
P.O. Box 61409
Vancouver, WA 98666-1409

If by Overnight Delivery Service:
Bonneville Power Administration – TSE/TPP-2
7500 NE 41st Street – Suite 130
Vancouver, WA 98662

If to the Puget:

Attention:
Phone:
Fax:
Email:

If by First Class Mail:

Puget Sound Energy, Inc.
P.O. Box 97034
Bellevue, WA 98009-9734

If by Overnight Delivery Service:
Puget Sound Energy, Inc.
10885 N.E. 4th Street, Suite 1100
Bellevue, WA 98004-5591

Department of Energy

Bonneville Power Administration
P.O. Box 61409
Vancouver, WA 98666-1409

TRANSMISSION SERVICES

July 3, 2014

In reply refer to: TSE/TPP-2

Contract No. 14TX - zzzzz
Letter Agreement

Ms. Booga Gilbertson
~~Senior Supervisor, T&D System Planning~~
Puget Sound Energy, Inc.

Bellevue, WA 98vvv

Mr. Phillip West

City of Seattle, City Light Department

Seattle, WA 98xxx

Dear Ms. Gilbertson and Mr. West:

The Bonneville Power Administration (BPA), the City of Seattle, City Light Department (SCL) and Puget Sound Energy, Inc. (PSE) are parties to the Memorandum of Agreement (MOA), Contract No. 11TX-15450, relating to the Preferred Puget Sound Area Plan of Service Projects and Cost Allocation. The parties to the MOA are currently in the initial stages of development of the projects described in the MOA. As this has progressed certain aspects of the MOA were identified that the parties believe need to be clarified.

This Letter Agreement is to meet the requirement in Section 7, Payment Schedule, of the MOA, which states that "The Parties shall agree in writing to the method and schedule for the cost share contributions to be made under this MOA."

BPA, Puget and Seattle agree that waiting until the completion of a project before exchanging funds (as specified in Section 7) is not the preferred course of action, given the potential for multiple years delay for completion of a project. An alternative arrangement is described below.

The following Financial Terms and Conditions shall apply to all cost sharing obligations incurred under the MOA:

FINANCIAL TERMS AND CONDITIONS STATEMENT

Each Party's cost obligation for performance of the duties associated with construction of each Preferred Plan Project shall be as specified in Sections 4 and 5 of the MOA. The cost of performing the duties associated with construction of each Preferred Plan Project shall be the actual cost of doing the work plus an overhead rate of xx% for labor and yy% for materials~~-~~,

Comment [TLT1]: Specify separate overheads for each Party?

DRAFT

representing the indirect costs of the project office plus the contractual support costs of contract negotiation, billing and accounting functions, and contract management.

Payments made to BPA shall be held in an account established for this Agreement. If BPA needs additional funds to complete the work at any time during performance of the project, BPA may request, in writing, for PSE to advance such additional funds to BPA for deposit in the account. PSE shall advance such additional funds within 30 days of BPA's written request, and BPA may temporarily stop work until PSE supplies the requested funds. If PSE does not advance such additional funds by the due date or, if at any time before completion of the project PSE elects to stop work under this Agreement, BPA will cease all work and restore, as a cost to the project at PSE's expense, government facilities and/or records (1) to their condition prior to the beginning of work under this Agreement, or (2) to some other mutually agreeable condition.

Within a reasonable time after completion of the project BPA shall make a full accounting to PSE showing the actual costs charged against the account. BPA shall either remit any unexpended balance in the account to PSE or bill for any costs in excess of the deposits in the account. PSE shall pay any excess costs within 30 days of the billing.

Payments not received within 30 days of the invoice date will accrue interest on the amount due from the invoice date to the date paid, at an annual interest rate equal to the higher of i) the prime rate (as reported in the Wall Street Journal in the first issue published during the month in which payment by PSE is due) plus 4 percent; or ii) such prime rate multiplied by 1.5.

- Language if cost is exceeding estimate in MOA –
- Periodic (every six months?) update on status of project and where it stands with respect to estimated cost
- Provisions for each party to invoice the others
- And???

Formatted: Bulleted + Level: 1 + Aligned at: 0.04" + Indent at: 0 29"

Formatted: Bulleted + Level: 1 + Aligned at: 0.04" + Indent at: 0 29"

Formatted: List Paragraph, No bullets or numbering

Formatted: Bulleted + Level: 1 + Aligned at: 0.04" + Indent at: 0 29"

Formatted: List Paragraph, No bullets or numbering

Formatted: Bulleted + Level: 1 + Aligned at: 0.04" + Indent at: 0 29"

DRAFT

Please sign all three originals of this Agreement where indicated, returning two originals to BPA one of the addresses listed belowat one of the following addresses. The remaining original is for your records. BPA will ensure that Puget and SCL have a full set of original signature pages.

In order to meet the project schedule, the executed Agreement must be received by cClose of bBusiness (COB) August 1, 2014. If BPA does not receive the executed Agreement by COB August 1, 2014, this offer Letter Agreement will be considered withdrawn.

First Class Mail Overnight Delivery Service
Bonneville Power Administration Bonneville Power Administration
Mail Stop: TSE/TPP-2 Mail Stop: TSE/TPP-2
P.O. Box 61409 7500 NE 41st Street – Suite 130
Vancouver, WA 98666-1409Vancouver, WA 98662

If you have any questions, please call me at (360) 619-6015.

Sincerely,

Toni L. Timberman
Senior Transmission Account Executive
Transmission Sales

CONCUR:

PUGET SOUND ENERGY, INC.

By: _____

Name: _____
(Print/Type)

Title: _____

Date: _____

CITY OF SEATTLE,
CITY LIGHT DEPARTMENT

By: _____

Name: _____
(Print/Type)

Title: _____

DRAFT

Date: _____

DRAFT

bcc:
R. Shier – FRG-2
P. Walters – FRG-2
B. Bennett – LT-7
C. Hamel – TEP/TPP-1
S. Kannan – TFB/DOB-1
J. Jusupovic – TPC/TPP-4
D. Sauer – TPCC/TPP-4
T. Van Cleave – TPCC/TPP-4
J. Brank – TPCV/OLYMPIA
P. Fiedler – TPCV/TPP-4
T. Timberman – TSE/TPP-2
P. Gibson – TSES/TPP-2
Customer File – TPC/TPP-4 (ED-21-11/Tacoma Power)
Customer File – TSE/TPP-2 (TM-11/Tacoma Power)
PWA File – TPC/TPP-4 (N0310/Latest Status)
Official File – CCM_Support (Agreement 14TP-10657)

DRAFT

From: Timberman,Toni L (BPA) - TSE-TPP-2
Sent: Friday, July 18, 2014 11:29 AM
To: Jusupovic,Jana D (BPA) - TPC-TPP-4
Subject: Accepted: PSANI Letter Agreement_Next Steps

From: Timberman,Toni L (BPA) - TSE-TPP-2
To: "Siddiqi, Uzma"; "john.phillips@pse.com"
Subject: RE: BPA -- letter agreements
Date: Saturday, July 19, 2014 6:02:00 PM

Uzma and John, these letters have been drafted and are being reviewed by BPA staff.

I did not know how to phrase some of the language so I sent each one off to the right folks and they are putting in the details. I will send you the drafts once this is done, likely not until the end of August due to vacations, etc.

See you next week,
Toni

From: Siddiqi, Uzma [mailto:Uzma.Siddiqi@seattle.gov]
Sent: Thursday, June 19, 2014 2:35 PM
To: Timberman,Toni L (BPA) - TSE-TPP-2
Subject: BPA -- letter agreements

BPA will be drafting letter agreements or letters to address:

a. The BPA scope change to rebuild the BPA portion of BO-SK and BPA's decision to cover 100% of that cost
b. BPA and SCL's payment to PSE for PSE projects (transformer/substation only)
c. Payment schedule for the PSANI projects
d. BPA's determination that the PSANI projects are separate for NEPA/SEPA purposes

From: Timberman,Toni L (BPA) - TSE-TPP-2
Sent: Wednesday, July 23, 2014 3:53 PM
To: Moffett,Justin T (BPA) - KEC-4
Subject: Accepted: Discussion about PSANI MOA addendums

From:	Van Cleave,Tonya M (BPA) - TPCC-TPP-4
To:	Jusupovic,Jana D (BPA) - TPC-TPP-4
Cc:	Timberman,Toni L (BPA) - TSE-TPP-2; Sauer,Dena J (BPA) - TPCC-TPP-4
Subject:	RE: PSANI Letter Agreement_Next Steps
Date:	Thursday, July 24, 2014 3:40:17 PM
Attachments:	Construction Agreement.doc

Jana, I quickly put this together to give you an idea of the format we can use for the PSANI Agreement... we can discuss further at tomorrow's mtg.

Thx.,

-----Original Appointment-----
From: Jusupovic,Jana D (BPA) - TPC-TPP-4
Sent: Friday, July 18, 2014 11:28 AM
To: Jusupovic,Jana D (BPA) - TPC-TPP-4; Timberman,Toni L (BPA) - TSE-TPP-2; Sauer,Dena J (BPA) - TPCC-TPP-4; Van Cleave,Tonya M (BPA) - TPCC-TPP-4
Subject: PSANI Letter Agreement_Next Steps
When: Friday, July 25, 2014 10:30 AM-11:30 AM (UTC-08:00) Pacific Time (US & Canada).
Where: TPP 477(6)
Importance: High

<< Message: 16053_PSE-SCL-PSANI MOA SCOPE CHANGE LTR AGMT >>

Contract No. 14TP-xxxxx

CONSTRUCTION AGREEMENT

executed by the

UNITED STATES OF AMERICA

DEPARTMENT OF ENERGY

acting by and through the

BONNEVILLE POWER ADMINISTRATION

and

CUSTOMER LONG NAME

Index to Sections

Section		Page
1.	DIVISION OF RESPONSIBILITIES	2
2.	OWNERSHIP, OPERATION & MAINTENANCE	X
3.	ACCESS	X
4.	RELATED AGREEMENTS	X
5.	ENVIRONMENTAL COMPLIANCE	X
6.	PROJECT SCHEDULE	X
7.	TERMINATION	X
8.	SIGNATURES	X

Exhibit A FINANCIAL TERMS AND CONDITIONS STATEMENT
Exhibit B NOTICES

This CONSTRUCTION AGREEMENT (Agreement) is executed by the UNITED STATES OF AMERICA, Department of Energy, acting by and through the BONNEVILLE POWER ADMINISTRATION (BPA) and CUSTOMER LONG NAME (CUSTOMER SHORT NAME) hereinafter sometimes referred to individually as "Party" and collectively as "Parties".

RECITALS

WHEREAS,

WHEREAS,

WHEREAS,

NOW, THEREFORE, the Parties agree to the following:

1. DIVISION OF RESPONSIBILITIES
(use headings listed below as applicable)

(a) **BPA shall, at (Customer Short Name)'s expense:**

(1)

(b) **(Customer Short Name) shall, at (Customer Short Name)'s expense:**

(1)

(c) **BPA shall, at BPA's expense:**

(1)

(d) **(Customer Short Name) shall, at BPA's expense:**

2. OWNERSHIP, OPERATION & MAINTENANCE

(a) BPA, at BPA's expense, _____.

(b) Customer Short Name, at Customer Short Name's expense, _____.

3. ACCESS *(if applicable)*

Option 1 – BPA Access to Customer facilities
(Customer Short Name) grants BPA access to enter its facilities described under this Agreement at all reasonable times and in accordance with safety and security requirements in order to access the equipment installed by BPA under Section xxxx above, as long as such equipment remains within (Customer Short Name)'s facilities.

Option 2 – Customer Access to BPA facilities
BPA grants (Customer Short Name) access to enter its facilities described under this Agreement at all reasonable times and in accordance with safety and security requirements in order to access the equipment installed by (Customer Short Name) under Section xxxx above, as long as such equipment remains within BPA's facilities.

4. RELATED AGREEMENTS
The Parties intend to enter into a separate long-term agreement relating to the facilities and equipment installed herein to document the respective ownership, operation and maintenance and access obligations which will continue beyond the life of this Agreement.

5. ENVIRONMENTAL COMPLIANCE

Option 1 – Clause needed if environmental review is not complete

Comment [tmv5501]: Note: if selecting "Option 1", please use the FTC clause labeled "FTC_Agreements that include NEPA clause"

Upon execution of this Agreement the parties are authorized to proceed with all preliminary engineering and project management work. The performance of all construction work under this Agreement is contingent on BPA's completion of its environmental review process under the National Environmental Policy Act (NEPA). After completion of this process BPA will decide whether to proceed with the construction work and, if so, whether modifications to such work should be made based on the NEPA review. BPA reserves the absolute right to choose any alternatives considered in the NEPA process, including the no-action alternative, and nothing in this agreement shall be construed as obligating BPA to proceed with construction work under this Agreement or to allow (Customer Short Name) to proceed with construction work under this Agreement before BPA has completed the NEPA review process and made a decision regarding how to proceed. If BPA decides that modifications to the construction work under this Agreement should be made, the parties shall modify their respective obligations under this Agreement to be consistent with such modifications.

Option 2 – Clause needed if a Categorical Exclusion has been issued

BPA issued an Environmental Clearance Memorandum regarding this project on (DATE), indicating that National Environmental Policy Act requirements have been met.

Option 3 – Clause needed if there are no environmental impacts

BPA has determined that no environmental review will be needed for this project.

6. PROJECT SCHEDULE

The estimated date for this Project is _____.

7. TERMINATION

This Agreement shall terminate upon full performance by BPA and Customer Short Name of their respective obligations set forth herein, but in no event shall the term of this Agreement exceed two years from its effective date.

8. SIGNATURES

The Parties have caused this Agreement to be executed as of the date all/both Parties have signed this Agreement.

CUSTOMER LONG NAME		CUSTOMER LONG NAME	
By:	_____	By:	_____
Name: *(Print/Type)*	_____	Name: *(Print/Type)*	_____
Title:	_____	Title:	_____
	_____		_____

Date: _____ Date: _____

UNITED STATES OF AMERICA
Department of Energy
Bonneville Power Administration

By: _____

Name: _____
(Print/Type)
Title: Transmission Account Executive

Date: _____

EXHIBIT A
FINANCIAL TERMS AND CONDITIONS STATEMENT

EXHIBIT C
NOTICES

1. ADMINISTRATIVE CONTACTS

Any notice or other communication related to this Agreement shall be in writing and shall be deemed to have been received if delivered in person, by First Class mail, by facsimile or sent by overnight delivery service.

Administrative contacts under this Agreement are as follows:

If to Customer:
Customer Long Name
Attention: Name
(Title)
Street Address
City, State Zip
Phone: (xxx) xxx-xxxx, ext. xxx
Fax: (xxx) xxx-xxxx
E-Mail: xxxx@xxx.

Customer Long Name
Attention: Name
(Title)
Street Address
City, State Zip
Phone: (xxx) xxx-xxxx, ext. xxx
E-Mail: xxxx@xxx.

If to BPA:
Attention: Transmission Account Executive for Customer Long Name
Phone: (360) 619-60xx
Fax: (360) 619-6940

First Class Mail
Bonneville Power Administration
Mail Stop: TSE/TPP-2
P.O. Box 61409
Vancouver, WA 98666

Overnight Delivery Service
Bonneville Power Administration
Mail Stop: TSE/TPP-2
7500 NE 41st Street, Suite 130
Vancouver, WA 98662

2. CHANGES IN NOTICES

If either Party changes its contact(s), that Party shall notify the other Party by voice phone, facsimile transmission, or other means immediately. The Party making the change shall send written notice of the change to the other Party within three business days. BPA shall revise this Exhibit upon such notice.

From: Timberman,Toni L (BPA) - TSE-TPP-2
To: Jusupovic,Jana D (BPA) - TPC-TPP-4
Subject: FW: BPA -- PSANI letter agreements
Date: Friday, July 25, 2014 1:17:00 PM

From: Siddiqi, Uzma [mailto:Uzma.Siddiqi@seattle.gov]
Sent: Thursday, June 19, 2014 2:35 PM
To: Timberman,Toni L (BPA) - TSE-TPP-2
Subject: BPA -- letter agreements

BPA will be drafting letter agreements or letters to address:

a. The BPA scope change to rebuild the BPA portion of BO-SK and BPA's decision to cover 100% of that cost
b. BPA and SCL's payment to PSE for PSE projects (transformer/substation only)
c. Payment schedule for the PSANI projects
d. BPA's determination that the PSANI projects are separate for NEPA/SEPA purposes

From:	Jusupovic,Jana D (BPA) - TPC-TPP-4
To:	Van Cleave,Tonya M (BPA) - TPCC-TPP-4; Timberman,Toni L (BPA) - TSE-TPP-2; Sauer,Dena J (BPA) - TPCC-TPP-4
Subject:	RE: Meeting Notes: PSANI Letter Agreement_Next Steps
Date:	Monday, July 28, 2014 8:35:30 AM

Thank you so much Tonya for writing this up, really appreciate it!

I made very minor edits below in red.

Toni,

Thanks again for getting us up to speed on this project, TPC will support you any way that we can!

From: Van Cleave,Tonya M (BPA) - TPCC-TPP-4
Sent: Friday, July 25, 2014 11:34 AM
To: Jusupovic,Jana D (BPA) - TPC-TPP-4; Timberman,Toni L (BPA) - TSE-TPP-2; Sauer,Dena J (BPA) - TPCC-TPP-4
Subject: Meeting Notes: PSANI Letter Agreement_Next Steps

Here are my notes from today's meeting (feel free to make any edits):

1.) There will be 4 Letter Agreements:

a. SCL/BPA/PSE: BPA scope change to rebuild the BPA portion of the BO-SK and BPA's decision to cover 100% of the costs.

b. BPA/PSE: BPA and SCL payment to PSE for PSE projects (transformer & sub only).

c. SCL/BPA/PSE ~~(???)~~: Payment schedule for PSANI projects.

d. SCL/BPA/PSE: BPA's determination that the PSANI projects are separate for NEPA/SEPA process.

2.) Jana will provide the technical support/language for these Agreements.

3.) The Letter Agreements will be processed through TSE/TSES.

4.) A meeting is scheduled on 7/29 with TEPO/Finance to discuss the payment schedule & language to be used for the payment schedule Letter Agreement.

5.) Jana to provide Toni with the email documenting that funding has been approved.

6.) Toni will meet with Paul & Hardev to see if Hardev approves of the 4 letter agreements moving forward. ~~this option is feasible~~.

7.) If approved, Toni suggested that Hardev would sign all 4 Letter Agreements, unless further delegated.

Thanks!

-----Original Appointment-----
From: Jusupovic,Jana D (BPA) - TPC-TPP-4
Sent: Friday, July 18, 2014 11:28 AM
To: Jusupovic,Jana D (BPA) - TPC-TPP-4; Timberman,Toni L (BPA) - TSE-TPP-2; Sauer,Dena J (BPA) - TPCC-TPP-4; Van Cleave,Tonya M (BPA) - TPCC-TPP-4
Subject: PSANI Letter Agreement_Next Steps
When: Friday, July 25, 2014 10:30 AM-11:30 AM (UTC-08:00) Pacific Time (US & Canada).
Where: TPP 477(6)
Importance: High

<< Message: 16053_PSE-SCL-PSANI MOA SCOPE CHANGE LTR AGMT >>

From:	Jusupovic,Jana D (BPA) - TPC-TPP-4
To:	Shier,Robert P (BPA) - FRG-2; Holst,Michele R (BPA) - TEPO-TPP-1; Sauer,Dena J (BPA) - TPCC-TPP-4; Marleau,Michael L (BPA) - TEP-TPP-1; "angela.dorf@hdrinc.com"
Cc:	Timberman,Toni L (BPA) - TSE-TPP-2; Van Cleave,Tonya M (BPA) - TPCC-TPP-4
Subject:	PSANI Meeting Minutes
Date:	Thursday, July 31, 2014 8:17:32 AM
Attachments:	photo.jpg
Importance:	High

Good Morning Everyone,

Attached below are our meeting minutes, please add or edit any changes you see fit. I also attached what we wrote up on the board for our notes as well.
Great meeting by the way everyone, it really helped clear up a lot of question I had.

-

-

DATE OF MEETING:

Tuesday July, 29th, 2014

-

ATTENDANCE:

Dena Sauer
Michele Holst
Angela Dorf
Michael Marleau
Robert Shier
Jana Jusupovic

MEETING NOTES:

FTC Letter Agreement

- Clarify who will be billing whom?
- Will all bills come out of Seattle?
- Is it true that PSE cannot pay Seattle directly?
    - If so, would PSE fund through BPA? If BPA does not need to be involved regarding the payment between Seattle and PSE we would rather not.
- BPA needs to request from Seattle or whoever bills us for a list of expenses on each bill?
- Can BPA be billed on a quarterly basis?
- BPA needs a cost analyst point of contact from whoever is billing us?

-

Puget Preferred Plan Projects

BPA Costs = ($16.1M) * (The ***ACTUAL*** costs of the Delridge to Duwamish reconductor project and Bothell to SnoKing Recondutor Project)

(The ***ESTIMATED*** costs of the Delridge to Duwamish reconductor project and Bothell to SnoKing Recondutor Project)

(Invoicing)

BPA

$60M

$5.4M

SCL

BPA (1/3) (1.8)

PSE (1/3) (1.8)

$5.3M

PSE (1/3)

16.1 x ~~(4.4 / 4.4)~~

actuals / estimate

BPA (1/3) (1.75)

SCL (1/3) (1.75)

→ Raver (CL)

→ Raswork (CL)

→ Joint Project → AD NEPA

AD → Seattle

→ PSE

.05 → BPA (PSE)

From:	Timberman,Toni L (BPA) - TSE-TPP-2
To:	Martinez,Geneva C (CONTR) - TSES-TPP-2
Subject:	16054_PSE_USE OF FUNDS LTR AGMT
Date:	Wednesday, August 06, 2014 9:59:41 AM
Attachments:	16054_PSE_USE OF FUNDS LTR AGMT.doc

---

2 copies please

Department of Energy

Bonneville Power Administration
P.O. Box 61409
Vancouver, WA 98666-1409

TRANSMISSION SERVICES

July ~~22~~XX, 2014

Formatted: Highlight

In reply refer to: TSE/TPP-2

Contract No. 14TX-16054
Letter Agreement

Ms. Booga Gilbertson, Vice President,
Operations Services
Puget Sound Energy, Inc.
10885 NE 4th Street, PSE – 11S
Bellevue, WA 98004

Dear Ms. Gilbertson:

The Bonneville Power Administration (BPA), Puget Sound Energy, Inc. (PSE) and City of Seattle, City Light Department (SCL) are parties to the Memorandum of Agreement (MOA), Contract No. 11TX-15450, relating to the Preferred Puget Sound Area Plan of Service Projects and Cost Allocation. The parties to the MOA are currently in the initial stages of development of the projects described in the MOA. As this has progressed, certain aspects of the MOA were identified that the parties believe need to be clarified.

This Agreement is intended to clarify the use of BPA funds contributed toward the adjusted projected capital cost of the Puget Preferred Plan Projects described in Sections 4(c) and 5(a) of the MOA.

~~BPA requires that the~~The parties acknowledge that BPA is not involved in any manner or capacity in PSE's Sammamish to Lakeside to Talbot Rebuild Project and agree that no BPA funds provided under the MOA will be allocated ~~directly to PSE's Lakeside 230 kV Transformer Addition Project, with no funds allocated~~ to PSE's Sammamish to Lakeside to Talbot Rebuild Project. Instead, all BPA funds under the MOA will be allocated to PSE's Lakeside 230 kV Transformer Addition Project as well as the other BPA and SCL Preferred Plan Projects identified in the MOA.

In order to meet the project schedule, please sign both originals of this Agreement, retain one original for your records and return the remaining original to my attention at one of the following addresses at your earliest convenience, but not later than Close of Business on August 30, 2014:

First Class Mail	Overnight Delivery Service
Bonneville Power Administration	Bonneville Power Administration

Mail Stop: TSE/TPP-2
P.O. Box 61409
Vancouver, WA 98666-1409

Mail Stop: TSE/TPP-2
7500 NE 41st Street – Suite 130
Vancouver, WA 98662

If you have any questions, please call me at (360) 619-6015.

Sincerely,

Toni L. Timberman
Senior Transmission Account Executive
Transmission Sales

CONCUR:

PUGET SOUND ENERGY, INC.

By: _____

Name: _____
(Print/Type)

Title: _____

Date: _____

bcc:
C. Olsen– KSC-TPP-1
B. Bennett – LT-7
J. Weiss – TPCV/COVINGTON
T. Timberman – TSE/TPP-2
P. Gibson – TSES/TPP-2
Customer File – TS/-TPP-2 (TM-11, Puget Sound Energy, Inc.)
Customer File – TSE/TPP-2 (TM-11, City of Seattle, City Light Department.)
Official File – CCM Support

(W:\CT\Puget Sound Energy, Inc\Drafts\16054_PSE_USE OF FUNDS.Doc)

From:	Timberman,Toni L (BPA) - TSE-TPP-2
To:	Martinez,Geneva C (CONTR) - TSES-TPP-2
Subject:	FW: PSANI Meeting Minutes
Date:	Wednesday, August 06, 2014 10:02:00 AM
Attachments:	photo.jpg
Importance:	High

Please print, including the attached photo.
Thanks!

From: Jusupovic,Jana D (BPA) - TPC-TPP-4
Sent: Thursday, July 31, 2014 8:18 AM
To: Shier,Robert P (BPA) - FRG-2; Holst,Michele R (BPA) - TEPO-TPP-1; Sauer,Dena J (BPA) - TPCC-TPP-4; Marleau,Michael L (BPA) - TEP-TPP-1; 'angela.dorf@hdrinc.com'
Cc: Timberman,Toni L (BPA) - TSE-TPP-2; Van Cleave,Tonya M (BPA) - TPCC-TPP-4
Subject: PSANI Meeting Minutes
Importance: High

Good Morning Everyone,

Attached below are our meeting minutes, please add or edit any changes you see fit. I also attached what we wrote up on the board for our notes as well.
Great meeting by the way everyone, it really helped clear up a lot of question I had.

-

-

DATE OF MEETING:

Tuesday July, 29th, 2014

-

ATTENDANCE:

Dena Sauer
Michele Holst
Angela Dorf
Michael Marleau
Robert Shier
Jana Jusupovic

MEETING NOTES:

FTC Letter Agreement

- Clarify who will be billing whom?
- Will all bills come out of Seattle?
- Is it true that PSE cannot pay Seattle directly?
    - If so, would PSE fund through BPA? If BPA does not need to be involved regarding the payment between Seattle and PSE we would rather not.
- BPA needs to request from Seattle or whoever bills us for a list of expenses on each bill?
- Can BPA be billed on a quarterly basis?

- BPA needs a cost analyst point of contact from whoever is billing us?

-

Puget Preferred Plan Projects

BPA Costs = ($16.1M) * (The ***ACTUAL*** costs of the Delridge to Duwamish reconductor project and Bothell to SnoKing Recondutor Project)

(The ***ESTIMATED*** costs of the Delridge to Duwamish reconductor project and Bothell to SnoKing Recondutor Project)

(Invoicing)

BPA

$60M

$5.4M

SCL

BPA (1/3) (1.8)

PSE (1/3) (1.8)

$5.3M

PSE (1/3)

16.1 x ~~(4.4 / 4.4)~~

actuals / estimate

BPA (1/3) (1.75)

SCL (1/3) (1.75)

→ Raver (CL)

→ Raswork (CL)

→ Joint Project → AD NEPA

AD → Seattle

→ PSE

.05 → BPA (PSE)

From: Timberman,Toni L (BPA) - TSE-TPP-2
To: "Siddiqi, Uzma"
Subject: RE: PSANI Project Manager Meeting
Date: Thursday, August 07, 2014 4:14:00 PM

We met internally on the four letters yesterday – boy there was a lot of confusion, since we had three separate drafting efforts going, and I thought I had the pen. One question that kept coming up from our legal staff was, if Seattle cannot sign an amended MOA without an ordinance, why do they believe they can sign these letter agreements without one? I essentially said that it was your judgment and your request for the letters, and until you receive the draft letters you would not know for sure so let's get them done and send them to you. So – we are still working on them, but now it is a controlled effort. The financial one will take the longest and will likely require meetings with all the parties before it is final.

From: Siddiqi, Uzma [mailto:Uzma.Siddiqi@seattle.gov]
Sent: Thursday, August 07, 2014 4:09 PM
To: Timberman,Toni L (BPA) - TSE-TPP-2
Subject: RE: PSANI Project Manager Meeting

Waiting for mike's input

From: Timberman,Toni L (BPA) - TSE-TPP-2 [mailto:tltimberman@bpa.gov]
Sent: Thursday, August 07, 2014 4:06 PM
To: Siddiqi, Uzma
Subject: FW: PSANI Project Manager Meeting

Uzma, I will be up there that week, and will be available if you happen to make it work for 9/25 in the morning.

From: Kostek, Leann [mailto:leann.kostek@pse.com]
Sent: Thursday, August 07, 2014 3:07 PM
To: 'Siddiqi, Uzma'; Marleau,Michael L (BPA) - TEP-TPP-1
Cc: Timberman,Toni L (BPA) - TSE-TPP-2
Subject: RE: PSANI Project Manager Meeting

I will be on PTO September 8-17.

The week of 9/22 I'm available

9/22 PM
9/23 AM
9/24 PM
9/25 all day
9/26 all day

From: Siddiqi, Uzma [mailto:Uzma.Siddiqi@seattle.gov]

Sent: Thursday, August 07, 2014 11:02 AM
To: mlmarleau@bpa.gov; Kostek, Leann
Cc: Timberman,Toni L (BPA) - TSE-TPP-2
Subject: PSANI Project Manager Meeting

Hi folks,
Hope you are having a great summer.

It is time for our semi-annual PSANI Project Managers Meeting.
Can you give me a couple of times that work for you?

Thanks,
Uzma

From:	Gibson,Paula L (BPA) - TSES-TPP-2
To:	Timberman,Toni L (BPA) - TSE-TPP-2
Subject:	RE: 1605X PSANI MOA NEPA LTR AGMT 8_8 TT
Date:	Friday, August 08, 2014 3:22:29 PM
Attachments:	1605X PSANI MOA NEPA LTR AGMT 8_8 TT.doc

Updated with contract #.

From: Timberman,Toni L (BPA) - TSE-TPP-2
Sent: Friday, August 08, 2014 3:12 PM
To: Gibson,Paula L (BPA) - TSES-TPP-2
Subject: RE: 1605X PSANI MOA NEPA LTR AGMT 8_8 TT

Yes please

From: Gibson,Paula L (BPA) - TSES-TPP-2
Sent: Friday, August 08, 2014 3:02 PM
To: Timberman,Toni L (BPA) - TSE-TPP-2
Subject: RE: 1605X PSANI MOA NEPA LTR AGMT 8_8 TT

Here it is, do you want me to assign a contract number yet?

From: Timberman,Toni L (BPA) - TSE-TPP-2
Sent: Friday, August 08, 2014 2:39 PM
To: Gibson,Paula L (BPA) - TSES-TPP-2
Subject: 1605X PSANI MOA NEPA LTR AGMT 8_8 TT

Paula, could you please make this into a Letter Agreement? Add Concur signature blocks for Puget and Seattle.

Thanks,
Toni

Department of Energy

Bonneville Power Administration
P.O. Box 61409
Vancouver, WA 98666-1409

TRANSMISSION SERVICES

August XX, 2014

In reply refer to: TSE/TPP-2

Contract No. 14TX-16060
Letter Agreement

Ms. Booga Gilbertson
Vice President Operations Services
Puget Sound Energy, Inc.
P.O. Box 90868
Bellevue, WA 98009-0868

Mr. Phillip West
Customer Service Energy Officer
City of Seattle, City Light Department
700 Fifth Ave., Suite 2822
Seattle, WA 98104-5031

Dear Ms. Gilbertson and Mr. West:

The Bonneville Power Administration (BPA), Puget Sound Energy, Inc., (PSE) and City of Seattle, City Light Department (SCL) are parties to the Memorandum of Agreement (MOA), Contract No. 11TX-15450, relating to the Preferred Puget Sound Area Plan of Service Projects and Cost Allocation. The parties to the MOA are currently in the initial stages of development of the projects described in the MOA. As this has progressed, certain aspects of the MOA were identified that the parties believe need to be clarified.

This Agreement is intended to clarify BPA's obligations under the National Environmental Policy Act (NEPA) for its role in the MOA, as described in Section 8 of the MOA, as well as the nature of the Preferred Plan Projects described in the MOA for the purposes of NEPA.

With respect to environmental compliance BPA, as a Federal agency, has certain obligations and responsibilities under NEPA and other federal laws (collectively the NEPA review process) that it must fulfill before it can make a final decision concerning whether to participate in implementation of certain of the Preferred Plan Projects described in Section 3 of the MOA and the capital cost allocation described in Sections 4 and 5 of the MOA. Nothing in the MOA shall be construed as obligating or committing BPA to make a final decision concerning any of the Preferred Plan Projects and capital cost allocation before completing the NEPA review process. In addition, BPA reserves the right to determine the appropriate NEPA and other environmental compliance strategies for its actions under the MOA, and to choose any alternatives considered in the NEPA process, including the no-action alternative.

Furthermore, the parties acknowledge and agree that while the MOA identifies a number of Preferred Plan Projects to be undertaken by the parties, each of these projects could proceed independently from the others and that no single project is contingent or dependent upon another in the goal of relieving transmission congestion in the Puget Sound Area. As such, BPA, SCL, and PSE may elect to conduct separate environmental reviews for each project identified in the MOA.

In order to meet the project schedule, please sign all originals of this Agreement, retain one original for your records and return the remaining two originals to my attention at one of the following addresses at your earliest convenience, but not later than Close of Business on August x, 2014:

Formatted: Font: 11 pt

Formatted: Font: 11 pt

First Class Mail	Overnight Delivery Service
Bonneville Power Administration	Bonneville Power Administration
Mail Stop: TSE/TPP-2	Mail Stop: TSE/TPP-2
P.O. Box 61409	7500 NE 41st Street – Suite 130
Vancouver, WA 98666-1409	Vancouver, WA 98662

BPA will ensure that Puget and SCL have a full set of original signature pages.

Please do not hesitate to contact Justin Moffett at (503) 230-3233 or me at (360) 619-6015 if you would like to discuss this information.

Sincerely,

Toni L. Timberman
Senior Transmission Account Executive
Transmission Sales

CONCUR:

Formatted: Font: Times New Roman

PUGET SOUND ENERGY, INC.

By: _____

Name: _____
(Print/Type)

Title: _____

Date: _____

CITY OF SEATTLE,
CITY LIGHT DEPARTMENT

By: _____

Name: _____
(Print/Type)

Title: _____

Date: _____

From:	Timberman,Toni L (BPA) - TSE-TPP-2
To:	Gibson,Paula L (BPA) - TSES-TPP-2
Subject:	?? question PSE_USE OF FUNDS LTR AGMT
Date:	Friday, August 08, 2014 3:48:00 PM
Attachments:	16054_PSE_USE OF FUNDS LTR AGMT.doc

Maybe you already got a contract number for this one? I mistakenly thought Hub put in the PSANI MOA number, but its not the same.

From: Timberman,Toni L (BPA) - TSE-TPP-2
Sent: Friday, August 08, 2014 3:46 PM
To: Gibson,Paula L (BPA) - TSES-TPP-2
Subject: PSE_USE OF FUNDS LTR AGMT

Paula, please make this a letter agreement also, with Puget only, but need concurrence block. Will need a new contract number.

Department of Energy

Bonneville Power Administration
P.O. Box 61409
Vancouver, WA 98666-1409

TRANSMISSION SERVICES

July ~~22~~XX, 2014

Formatted: Highlight

In reply refer to: TSE/TPP-2

Contract No. 14TX-16054
Letter Agreement

Ms. Booga Gilbertson, Vice President,
Operations Services
Puget Sound Energy, Inc.
10885 NE 4th Street, PSE – 11S
Bellevue, WA 98004

Dear Ms. Gilbertson:

The Bonneville Power Administration (BPA), Puget Sound Energy, Inc. (PSE) and City of Seattle, City Light Department (SCL) are parties to the Memorandum of Agreement (MOA), Contract No. 11TX-15450, relating to the Preferred Puget Sound Area Plan of Service Projects and Cost Allocation. The parties to the MOA are currently in the initial stages of development of the projects described in the MOA. As this has progressed, certain aspects of the MOA were identified that the parties believe need to be clarified.

This Agreement is intended to clarify the use of BPA funds contributed toward the adjusted projected capital cost of the Puget Preferred Plan Projects described in Sections 4(c) and 5(a) of the MOA.

~~BPA requires that the~~The parties acknowledge that BPA is not involved in any manner or capacity in PSE's Sammamish to Lakeside to Talbot Rebuild Project and agree that no BPA funds provided under the MOA will be allocated ~~directly to PSE's Lakeside 230 kV Transformer Addition Project, with no funds allocated~~ to PSE's Sammamish to Lakeside to Talbot Rebuild Project. Instead, all BPA funds under the MOA will be allocated to PSE's Lakeside 230 kV Transformer Addition Project as well as the other BPA and SCL Preferred Plan Projects identified in the MOA.

In order to meet the project schedule, please sign both originals of this Agreement, retain one original for your records and return the remaining original to my attention at one of the following addresses at your earliest convenience, but not later than Close of Business on August 30, 2014:

First Class Mail	Overnight Delivery Service
Bonneville Power Administration	Bonneville Power Administration

Mail Stop: TSE/TPP-2
P.O. Box 61409
Vancouver, WA 98666-1409

Mail Stop: TSE/TPP-2
7500 NE 41st Street – Suite 130
Vancouver, WA 98662

If you have any questions, please call me at (360) 619-6015.

Sincerely,

Toni L. Timberman
Senior Transmission Account Executive
Transmission Sales

CONCUR:

PUGET SOUND ENERGY, INC.

By: _____

Name: _____
(Print/Type)

Title: _____

Date: _____

bcc:
C. Olsen– KSC-TPP-1
B. Bennett – LT-7
J. Weiss – TPCV/COVINGTON
T. Timberman – TSE/TPP-2
P. Gibson – TSES/TPP-2
Customer File – TS/-TPP-2 (TM-11, Puget Sound Energy, Inc.)
Customer File – TSE/TPP-2 (TM-11, City of Seattle, City Light Department.)
Official File – CCM Support

(W:\CT\Puget Sound Energy, Inc\Drafts\16054_PSE_USE OF FUNDS.Doc)

From:	Timberman,Toni L (BPA) - TSE-TPP-2
To:	Gibson,Paula L (BPA) - TSES-TPP-2
Subject:	FW: 16053_PSE-SCL-PSANI MOA SCOPE CHANGE LTR AGMT
Date:	Friday, August 08, 2014 3:51:00 PM
Attachments:	16053_PSE-SCL-PSANI MOA SCOPE CHANGE LTR AGMT.doc

This is the third one….I don't think we need any changes on this one. Jana Jusupovic is working on the financial language for the 4th letter agreement, but that might take a while so I wanted to have these three ready to send to Puget and Seattle as draft for their review.

From: Timberman,Toni L (BPA) - TSE-TPP-2
Sent: Thursday, July 17, 2014 9:13 AM
To: Moffett,Justin T (BPA) - KEC-4; Marleau,Michael L (BPA) - TEP-TPP-1; Jusupovic,Jana D (BPA) - TPC-TPP-4
Subject: 16053_PSE-SCL-PSANI MOA SCOPE CHANGE LTR AGMT

Attached is the draft Letter Agreement between BPA, SCL and Puget regarding the project scope changes under the PSANI MOA. Please take a look and let me know if you have any comments.

Jana, we need to get approval from Hardev that it is ok to offer this Letter Agreement since it is modifying the MOA that he signed. Could you please write up something that I can send to him with the draft for his approval?

Or –if you want to work this up through Kelly to get Hardev's approval, that is fine with me.

Let me know.

Toni

Department of Energy

Bonneville Power Administration
P.O. Box 61409
Vancouver, WA 98666-1409

TRANSMISSION SERVICES

July 22, 2014

In reply refer to: TSE/TPP-2

Contract No. 14TX-16053
Letter Agreement

Ms. Booga Gilbertson
Vice President, Operations Services
Puget Sound Energy, Inc.
10885 NE 4th Street, PSE – 11S
Bellevue, WA 98004

Mr. Phillip West
Customer Service Energy Officer
City of Seattle, City Light Department
700 Fifth Avenue, Suite 2822
Seattle, WA 98104-5031

Dear Ms. Gilbertson and Mr. West:

The Bonneville Power Administration (BPA), Puget Sound Energy, Inc, (PSE) and City of Seattle, City Light Department (SCL) are parties to the Memorandum of Agreement (MOA), Contract No. 11TX-15450, relating to the Preferred Puget Sound Area Plan of Service Projects and Cost Allocation. The parties to the MOA are currently in the initial stages of development of the projects described in the MOA. As this has progressed, certain aspects of the MOA were identified that the parties believe need to be clarified.

This Agreement is intended to clarify the scope changes related to the Covington 500 kV Transformer Addition Project described in Section 3(a) of the MOA and the Bothell to SnoKing Reconductor Project described in Section 3(c) of the MOA.

BPA's transformer addition originally planned for Covington Substation has been moved to Raver Substation. There is no change in financial responsibility under the MOA due to this relocation.

The Bothell to SnoKing Reconductor Project was identified in the MOA as an SCL project. However, during subsequent discussions it was discovered that BPA owns the first ½ mile of these lines on the SnoKing end. BPA will rebuild its owned portion of these lines at its cost, including any necessary replacement of equipment within SnoKing Substation associated with these lines.

In order to meet the project schedule, please sign all originals of this Agreement, retain one original for your records and return the remaining two originals to my attention at one of the following addresses at your earliest convenience, but not later than Close of Business on August 30, 2014:

First Class Mail	Overnight Delivery Service
Bonneville Power Administration Mail Stop: TSE/TPP-2 P.O. Box 61409 Vancouver, WA 98666-1409	Bonneville Power Administration Mail Stop: TSE/TPP-2 7500 NE 41st Street – Suite 130 Vancouver, WA 98662

BPA will ensure that Puget and SCL have a full set of original signature pages.

If you have any questions, please call me at (360) 619-6015.

Sincerely,

Toni L. Timberman
Senior Transmission Account Executive
Transmission Sales

CONCUR:

PUGET SOUND ENERGY, INC.

By: _____

Name: _____
(Print/Type)

Title: _____

Date: _____

CITY OF SEATTLE,
CITY LIGHT DEPARTMENT

By: _____

Name: _____
(Print/Type)

Title: _____

Date: _____

bcc:
C. Olsen– KSC-TPP-1
B. Bennett – LT-7
J. Weiss – TPCV/COVINGTON
T. Timberman – TSE/TPP-2
P. Gibson – TSES/TPP-2
Customer File – TS/-TPP-2 (TM-11, Puget Sound Energy, Inc.)
Customer File – TSE/TPP-2 (TM-11, City of Seattle, City Light Department.)
Official File – CCM Support

(W:\CT\Puget Sound Energy, Inc\Drafts\16053_PSE-SCL-PSANI MOA SCOPE CHANGE LTR AGMT.Doc)

From: Timberman,Toni L (BPA) - TSE-TPP-2
To: "john.phillips@pse.com"
Subject: language to review
Date: Friday, August 08, 2014 3:57:00 PM

John, this is the proposed language – could you please let me know if this is ok with Puget?

The parties acknowledge that BPA is not involved in any manner or capacity in PSE's Sammamish to Lakeside to Talbot Rebuild Project and agree that no BPA funds provided under the MOA will be allocated to PSE's Sammamish to Lakeside to Talbot Rebuild Project. Instead, all BPA funds under the MOA will be allocated to PSE's Lakeside 230 kV Transformer Addition Project as well as the other BPA and SCL Preferred Plan Projects identified in the MOA.

From: Timberman,Toni L (BPA) - TSE-TPP-2
To: Marleau,Michael L (BPA) - TEP-TPP-1; Jusupovic,Jana D (BPA) - TPC-TPP-4; Moffett,Justin T (BPA) - KEC-4
Subject: RE: PSANI Project Manager Meeting
Date: Friday, August 08, 2014 8:51:00 AM

Is the next meeting in Seattle or down here?

If it is in Seattle, I will be meeting with Seattle the afternoon of Sept 25th, so a meeting that morning would be great if you all are available.

From: Marleau,Michael L (BPA) - TEP-TPP-1
Sent: Friday, August 08, 2014 8:48 AM
To: Jusupovic,Jana D (BPA) - TPC-TPP-4; Timberman,Toni L (BPA) - TSE-TPP-2; Moffett,Justin T (BPA) - KEC-4
Subject: FW: PSANI Project Manager Meeting

Just checking if there are any conflicts to meeting in Sept.

Thanks,
Mike

From: Siddiqi, Uzma [mailto:Uzma.Siddiqi@seattle.gov]
Sent: Thursday, August 07, 2014 11:02 AM
To: Marleau,Michael L (BPA) - TEP-TPP-1; Kostek, Leann
Cc: Timberman,Toni L (BPA) - TSE-TPP-2
Subject: PSANI Project Manager Meeting

Hi folks,
Hope you are having a great summer.

It is time for our semi-annual PSANI Project Managers Meeting.
Can you give me a couple of times that work for you?

Thanks,
Uzma

From:	Siddiqi, Uzma
To:	Marleau,Michael L (BPA) - TEP-TPP-1; Kostek, Leann
Cc:	Timberman,Toni L (BPA) - TSE-TPP-2
Subject:	RE: PSANI Project Manager Meeting
Date:	Friday, August 08, 2014 10:20:16 AM

Sounds good.
I will send out an appt.

_____
From: Marleau,Michael L (BPA) - TEP-TPP-1 [mlmarleau@bpa.gov]
Sent: Friday, August 08, 2014 9:38 AM
To: Siddiqi, Uzma; Kostek, Leann
Cc: Timberman,Toni L (BPA) - TSE-TPP-2
Subject: RE: PSANI Project Manager Meeting

Uzma, a 9/25 morning meeting works for us.

Toni has another meeting in Seattle in the afternoon so the morning of the 25th would work great.
Maybe 10am?

Thanks,
Mike

From: Siddiqi, Uzma [mailto:Uzma.Siddiqi@seattle.gov]
Sent: Thursday, August 07, 2014 11:02 AM
To: Marleau,Michael L (BPA) - TEP-TPP-1; Kostek, Leann
Cc: Timberman,Toni L (BPA) - TSE-TPP-2
Subject: PSANI Project Manager Meeting

Hi folks,
Hope you are having a great summer.

It is time for our semi-annual PSANI Project Managers Meeting.
Can you give me a couple of times that work for you?

Thanks,
Uzma

From: Timberman,Toni L (BPA) - TSE-TPP-2
To: Fiedler,Paul A (BPA) - TG-DITT-2
Subject: FW: PSANI Project Manager Meeting
Date: Friday, August 08, 2014 10:23:00 AM

Paul, I mis-spoke. The PSANI project meeting is Sept 25, not Aug 28. We will be discussing the MOO with Seattle at 1:00 on August 28, meeting with Puget at 10:30 that morning.

-----Original Message-----
From: Siddiqi, Uzma [mailto:Uzma.Siddiqi@seattle.gov]
Sent: Friday, August 08, 2014 10:19 AM
To: Marleau,Michael L (BPA) - TEP-TPP-1; Kostek, Leann
Cc: Timberman,Toni L (BPA) - TSE-TPP-2
Subject: RE: PSANI Project Manager Meeting

Sounds good.
I will send out an appt.

_____
From: Marleau,Michael L (BPA) - TEP-TPP-1 [mlmarleau@bpa.gov]
Sent: Friday, August 08, 2014 9:38 AM
To: Siddiqi, Uzma; Kostek, Leann
Cc: Timberman,Toni L (BPA) - TSE-TPP-2
Subject: RE: PSANI Project Manager Meeting

Uzma, a 9/25 morning meeting works for us.

Toni has another meeting in Seattle in the afternoon so the morning of the 25th would work great. Maybe 10am?

Thanks,
Mike

From: Siddiqi, Uzma [mailto:Uzma.Siddiqi@seattle.gov]
Sent: Thursday, August 07, 2014 11:02 AM
To: Marleau,Michael L (BPA) - TEP-TPP-1; Kostek, Leann
Cc: Timberman,Toni L (BPA) - TSE-TPP-2
Subject: PSANI Project Manager Meeting

Hi folks,
Hope you are having a great summer.

It is time for our semi-annual PSANI Project Managers Meeting.
Can you give me a couple of times that work for you?

Thanks,
Uzma

From: Timberman,Toni L (BPA) - TSE-TPP-2 on behalf of Marleau,Michael L (BPA) - TEP-TPP-1
To: Weiss,John R (BPA) - TPCV-COVINGTON; Moffett,Justin T (BPA) - KEC-4; Jusupovic,Jana D (BPA) - TPC-TPP-4; Sauer,Dena J (BPA) - TPCC-TPP-4; Angela Dorf; Timberman,Toni L (BPA) - TSE-TPP-2
Subject: FW: PSANI meeting with Seattle City Light and Puget Sound Energy

---

John, this meeting is to discuss the PSANI projects. I thought you might be interested – Do you want to be included on the invite from Seattle?

-----Original Appointment-----
From: Marleau,Michael L (BPA) - TEP-TPP-1
Sent: Friday, August 08, 2014 9:21 AM
To: Marleau,Michael L (BPA) - TEP-TPP-1; Moffett,Justin T (BPA) - KEC-4; Jusupovic,Jana D (BPA) - TPC-TPP-4; Sauer,Dena J (BPA) - TPCC-TPP-4; Angela Dorf (HYPERLINK "mailto:angela.dorf@hdrinc.com" angela.dorf@hdrinc.com); Timberman,Toni L (BPA) - TSE-TPP-2
Subject: PSANI meeting with Seattle City Light and Puget Sound Energy
When: Thursday, September 25, 2014 8:00 AM-8:30 AM (UTC-08:00) Pacific Time (US & Canada).
Where: Seattle (TBD)

Save the date for a visit with SCL and PSE in Seattle.

Details to updated later.

From: Timberman,Toni L (BPA) - TSE-TPP-2
To: Marleau,Michael L (BPA) - TEP-TPP-1
Subject: RE: PSANI Project Manager Meeting
Date: Friday, August 08, 2014 11:39:00 AM

Thanks for the ride offer, but I will be going up Tuesday of that week for my series of monthly customer meetings. Also thanks for being willing to schedule for Sept 25, when I am already in Seattle so I don't have to make another trip.

From: Marleau,Michael L (BPA) - TEP-TPP-1
Sent: Friday, August 08, 2014 11:38 AM
To: Timberman,Toni L (BPA) - TSE-TPP-2
Subject: RE: PSANI Project Manager Meeting

Ha! The downside of multitasking (phone, email, people stopping in). I thought I replied to your question but I didn't.

Yes, the meeting is in Seattle.

I'm reserving a plane if you need a ride.

Thanks

From: Timberman,Toni L (BPA) - TSE-TPP-2
Sent: Friday, August 08, 2014 8:51 AM
To: Marleau,Michael L (BPA) - TEP-TPP-1; Jusupovic,Jana D (BPA) - TPC-TPP-4; Moffett,Justin T (BPA) - KEC-4
Subject: RE: PSANI Project Manager Meeting

Is the next meeting in Seattle or down here?

If it is in Seattle, I will be meeting with Seattle the afternoon of Sept 25th, so a meeting that morning would be great if you all are available.

From: Marleau,Michael L (BPA) - TEP-TPP-1
Sent: Friday, August 08, 2014 8:48 AM
To: Jusupovic,Jana D (BPA) - TPC-TPP-4; Timberman,Toni L (BPA) - TSE-TPP-2; Moffett,Justin T (BPA) - KEC-4
Subject: FW: PSANI Project Manager Meeting

Just checking if there are any conflicts to meeting in Sept.

Thanks,
Mike

From: Siddiqi, Uzma [mailto:Uzma.Siddiqi@seattle.gov]
Sent: Thursday, August 07, 2014 11:02 AM
To: Marleau,Michael L (BPA) - TEP-TPP-1; Kostek, Leann

Cc: Timberman,Toni L (BPA) - TSE-TPP-2
Subject: PSANI Project Manager Meeting

Hi folks,
Hope you are having a great summer.

It is time for our semi-annual PSANI Project Managers Meeting.
Can you give me a couple of times that work for you?

Thanks,
Uzma

From:	Timberman,Toni L (BPA) - TSE-TPP-2
To:	Gibson,Paula L (BPA) - TSES-TPP-2
Subject:	RE: 16062 PSANI MOA Financial Terms and Conditions, 16053 PSANI MOA SCOPE CHANGE LTR AGMT, 16054 PSANI MOA_USE OF FUNDS LTR AGMT, 16060 PSANI MOA NEPA LTR AGMT 8_8 TT
Date:	Tuesday, August 12, 2014 2:44:00 PM

Could you please modify the last paragraph on each to read this way? The project schedule is not tied to execution of these agreements.

Please sign both originals of this Agreement, retain one original for your records and return the remaining original to my attention at one of the following addresses at your earliest convenience, but not later than Close of Business on September xx, 2014:

-----Original Message-----
From: Gibson,Paula L (BPA) - TSES-TPP-2
Sent: Tuesday, August 12, 2014 2:41 PM
To: Timberman,Toni L (BPA) - TSE-TPP-2
Subject: RE: 16062 PSANI MOA Financial Terms and Conditions, 16053 PSANI MOA SCOPE CHANGE LTR AGMT, 16054 PSANI MOA_USE OF FUNDS LTR AGMT, 16060 PSANI MOA NEPA LTR AGMT 8_8 TT

Here you go.

-----Original Message-----
From: Timberman,Toni L (BPA) - TSE-TPP-2
Sent: Tuesday, August 12, 2014 12:43 PM
To: Gibson,Paula L (BPA) - TSES-TPP-2
Subject: 16062 PSANI MOA Financial Terms and Conditions, 16053 PSANI MOA SCOPE CHANGE LTR AGMT, 16054 PSANI MOA_USE OF FUNDS LTR AGMT, 16060 PSANI MOA NEPA LTR AGMT 8_8 TT

Paula, these are the drafts and file names I would like to use for these agreements.

Please accept changes and review each one for font size and type, add DRAFT watermark to them all, and make sure the agreement number appears on the signature page -I think this is a standard requirement so we can ensure the signature is for that particular agreement.

Thanks,
Toni

Department of Energy

Bonneville Power Administration
P.O. Box 61409
Vancouver, WA 98666-1409

TRANSMISSION SERVICES

August XX, 2014

In reply refer to: TSE/TPP-2

Contract No. 14TX-16054
Letter Agreement

Ms. Booga Gilbertson, Vice President,
Operations Services
Puget Sound Energy, Inc.
10885 NE 4th Street, PSE – 11S
Bellevue, WA 98004

Dear Ms. Gilbertson:

The Bonneville Power Administration (BPA), Puget Sound Energy, Inc, (PSE) and City of Seattle, City Light Department (SCL) are parties to the Memorandum of Agreement (MOA), Contract No. 11TX-15450, relating to the Preferred Puget Sound Area Plan of Service Projects and Cost Allocation. The parties to the MOA are currently in the initial stages of development of the projects described in the MOA. As this has progressed, certain aspects of the MOA were identified that the parties believe need to be clarified.

This Agreement is intended to clarify the use of BPA funds contributed toward the adjusted projected capital cost of the Puget Preferred Plan Projects described in Sections 4(c) and 5(a) of the MOA.

The parties acknowledge that BPA is not involved in any manner or capacity in PSE's Sammamish to Lakeside to Talbot Rebuild Project and agree that no BPA funds provided under the MOA will be allocated to PSE's Sammamish to Lakeside to Talbot Rebuild Project. Instead, all BPA funds under the MOA will be allocated to PSE's Lakeside 230 kV Transformer Addition Project as well as the other BPA and SCL Preferred Plan Projects identified in the MOA.

In order to meet the project schedule, please sign both originals of this Agreement, retain one original for your records and return the remaining original to my attention at one of the following addresses at your earliest convenience, but not later than Close of Business on
August 30, 2014:

<u>First Class Mail</u>

Bonneville Power Administration
Mail Stop: TSE/TPP-2
P.O. Box 61409
Vancouver, WA 98666-1409

<u>Overnight Delivery Service</u>

Bonneville Power Administration
Mail Stop: TSE/TPP-2
7500 NE 41st Street – Suite 130
Vancouver, WA 98662

If you have any questions, please call me at (360) 619-6015.

Sincerely,

Toni L. Timberman
Senior Transmission Account Executive
Transmission Sales

CONCUR:

PUGET SOUND ENERGY, INC.

By: _____

Name: _____
(Print/Type)

Title: _____

Date: _____

bcc:

C. Olsen– KSC-TPP-1
B. Bennett – LT-7
J. Weiss – TPCV/COVINGTON
T. Timberman – TSE/TPP-2
P. Gibson – TSES/TPP-2
Customer File – TS/-TPP-2 (TM-11, Puget Sound Energy, Inc.)
Customer File – TSE/TPP-2 (TM-11, City of Seattle, City Light Department.)
Official File – CCM Support

(W:\CT\Puget Sound Energy, Inc\Drafts\16054_PSE_USE OF FUNDS.Doc)

Department of Energy

Bonneville Power Administration
P.O. Box 61409
Vancouver, WA 98666-1409

TRANSMISSION SERVICES

~~July 3~~August X, 2014

In reply refer to: TSE/TPP-2

Contract No. 14TX-16062
Letter Agreement

Ms. Booga Gilbertson	Mr. Phillip West
Vice President, Operations Services	Customer Service Energy Officer
Puget Sound Energy, Inc.	City of Seattle, City Light Department
10885 NE 4th Street, PSE – 11S	700 Fifth Avenue, Suite 3200
Bellevue, WA 98004	Seattle, WA 98104-5031

Dear Ms. Gilbertson and Mr. West:

The Bonneville Power Administration (BPA), the City of Seattle, City Light Department (SCL) and Puget Sound Energy, Inc. (PSE) are parties to the Memorandum of Agreement (MOA), Contract No. 11TX-15450, relating to the Preferred Puget Sound Area Plan of Service Projects and Cost Allocation. The parties to the MOA are currently in the initial stages of development of the projects described in the MOA. As this has progressed certain aspects of the MOA were identified that the parties believe need to be clarified.

This Letter Agreement is to meet the requirement in Section 7, Payment Schedule, of the MOA, which states that "The Parties shall agree in writing to the method and schedule for the cost share contributions to be made under this MOA."

BPA, Puget and Seattle agree that waiting until the completion of a project before exchanging funds (as specified in Section 7) is not the preferred course of action, given the potential for multiple years delay for completion of a project. An alternative arrangement is described below.

The following Financial Terms and Conditions shall apply to all cost sharing obligations incurred under the MOA:

FINANCIAL TERMS AND CONDITIONS STATEMENT

Each Party's cost obligation for performance of the duties associated with construction of each Preferred Plan Project shall be as specified in Sections 4 and 5 of the MOA. The cost of performing the duties associated with construction of each Preferred Plan Project shall be the actual cost of doing the work plus an overhead rate of xx% for labor and yy% for materials-,

Comment [TLT1]: Specify separate overheads for each Party?

DRAFT

representing the indirect costs of the project office plus the contractual support costs of contract negotiation, billing and accounting functions, and contract management.

Payments made to BPA shall be held in an account established for this Agreement. If BPA needs additional funds to complete the work at any time during performance of the project, BPA may request, in writing, for PSE to advance such additional funds to BPA for deposit in the account. PSE shall advance such additional funds within 30 days of BPA's written request, and BPA may temporarily stop work until PSE supplies the requested funds. If PSE does not advance such additional funds by the due date or, if at any time before completion of the project PSE elects to stop work under this Agreement, BPA will cease all work and restore, as a cost to the project at PSE's expense, government facilities and/or records (1) to their condition prior to the beginning of work under this Agreement, or (2) to some other mutually agreeable condition.

Within a reasonable time after completion of the project BPA shall make a full accounting to PSE showing the actual costs charged against the account. BPA shall either remit any unexpended balance in the account to PSE or bill for any costs in excess of the deposits in the account. PSE shall pay any excess costs within 30 days of the billing.

Payments not received within 30 days of the invoice date will accrue interest on the amount due from the invoice date to the date paid, at an annual interest rate equal to the higher of i) the prime rate (as reported in the Wall Street Journal in the first issue published during the month in which payment by PSE is due) plus 4 percent; or ii) such prime rate multiplied by 1.5.

- Language if cost is exceeding estimate in MOA –
- Periodic (every six months?) update on status of project and where it stands with respect to estimated cost
- Provisions for each party to invoice the others
- And???

Formatted: Bulleted + Level: 1 + Aligned at: 0.04" + Indent at: 0 29"

Formatted: Bulleted + Level: 1 + Aligned at: 0.04" + Indent at: 0 29"

Formatted: List Paragraph, No bullets or numbering

Formatted: Bulleted + Level: 1 + Aligned at: 0.04" + Indent at: 0 29"

Formatted: List Paragraph, No bullets or numbering

Formatted: Bulleted + Level: 1 + Aligned at: 0.04" + Indent at: 0 29"

Formatted: List Paragraph, No bullets or numbering

Please sign all three originals of this Agreement where indicated, returning two originals to BPA one of the addresses listed below at one of the following addresses. The remaining original is for your records. BPA will ensure that Puget and SCL have a full set of original signature pages.

In order to meet the project schedule, the executed Agreement must be received by ~~c~~Close of ~~b~~Business (COB) August 1, 2014. If BPA does not receive the executed Agreement by COB August 1, 2014, this offer Letter Agreement will be considered withdrawn.

First Class Mail	Overnight Delivery Service
Bonneville Power Administration	Bonneville Power Administration
Mail Stop: TSE/TPP-2	Mail Stop: TSE/TPP-2
P.O. Box 61409	7500 NE 41st Street – Suite 130
Vancouver, WA 98666-1409	Vancouver, WA 98662

DRAFT

If you have any questions, please call me at (360) 619-6015.

Sincerely,

Toni L. Timberman
Senior Transmission Account Executive
Transmission Sales

CONCUR:

PUGET SOUND ENERGY, INC.

By: _____

Name: _____
(Print/Type)

Title: _____

Date: _____

CITY OF SEATTLE,
CITY LIGHT DEPARTMENT

By: _____

Name: _____
(Print/Type)

Title: _____

Date: _____

DRAFT

bcc:
R. Shier – FRG-2
P. Walters – FRG-2
B. Bennett – LT-7
C. Hamel – TEP/TPP-1
S. Kannan – TFB/DOB-1
J. Jusupovic – TPC/TPP-4
D. Sauer – TPCC/TPP-4
T. Van Cleave – TPCC/TPP-4
J. Brank – TPCV/OLYMPIA
P. Fiedler – TPCV/TPP-4
T. Timberman – TSE/TPP-2
P. Gibson – TSES/TPP-2
Customer File – TPC/TPP-4 (ED-21-11/Tacoma Power)
Customer File – TSE/TPP-2 (TM-11/Tacoma Power)
PWA File – TPC/TPP-4 (N0310/Latest Status)
Official File – CCM_Support (Agreement 14TP-10657)

DRAFT

Department of Energy

Bonneville Power Administration
P.O. Box 61409
Vancouver, WA 98666-1409

TRANSMISSION SERVICES

July 22, 2014

In reply refer to: TSE/TPP-2

Contract No. 14TX-16053
Letter Agreement

Ms. Booga Gilbertson
Vice President, Operations Services
Puget Sound Energy, Inc.
10885 NE 4th Street, PSE – 11S
Bellevue, WA 98004

Mr. Phillip West
Customer Service Energy Officer
City of Seattle, City Light Department
700 Fifth Avenue, Suite 2822
Seattle, WA 98104-5031

Dear Ms. Gilbertson and Mr. West:

The Bonneville Power Administration (BPA), Puget Sound Energy, Inc, (PSE) and City of Seattle, City Light Department (SCL) are parties to the Memorandum of Agreement (MOA), Contract No. 11TX-15450, relating to the Preferred Puget Sound Area Plan of Service Projects and Cost Allocation. The parties to the MOA are currently in the initial stages of development of the projects described in the MOA. As this has progressed, certain aspects of the MOA were identified that the parties believe need to be clarified.

This Agreement is intended to clarify the scope changes related to the Covington 500 kV Transformer Addition Project described in Section 3(a) of the MOA and the Bothell to SnoKing Reconductor Project described in Section 3(c) of the MOA.

BPA's transformer addition originally planned for Covington Substation has been moved to Raver Substation. There is no change in financial responsibility under the MOA due to this relocation.

The Bothell to SnoKing Reconductor Project was identified in the MOA as an SCL project. However, during subsequent discussions it was discovered that BPA owns the first ½ mile of these lines on the SnoKing end. BPA will rebuild its owned portion of these lines at its cost, including any necessary replacement of equipment within SnoKing Substation associated with these lines.

In order to meet the project schedule, please sign all originals of this Agreement, retain one original for your records and return the remaining two originals to my attention at one of the following addresses at your earliest convenience, but not later than Close of Business on August 30, 2014:

First Class Mail	Overnight Delivery Service
Bonneville Power Administration Mail Stop: TSE/TPP-2 P.O. Box 61409 Vancouver, WA 98666-1409	Bonneville Power Administration Mail Stop: TSE/TPP-2 7500 NE 41st Street – Suite 130 Vancouver, WA 98662

BPA will ensure that Puget and SCL have a full set of original signature pages.

If you have any questions, please call me at (360) 619-6015.

Sincerely,

Toni L. Timberman
Senior Transmission Account Executive
Transmission Sales

CONCUR:

PUGET SOUND ENERGY, INC.

By: _____

Name: _____
(Print/Type)

Title: _____

Date: _____

CITY OF SEATTLE,
CITY LIGHT DEPARTMENT

By: _____

Name: _____
(Print/Type)

Title: _____

Date: _____

bcc:
C. Olsen– KSC-TPP-1
B. Bennett – LT-7
J. Weiss – TPCV/COVINGTON
T. Timberman – TSE/TPP-2
P. Gibson – TSES/TPP-2
Customer File – TS/-TPP-2 (TM-11, Puget Sound Energy, Inc.)
Customer File – TSE/TPP-2 (TM-11, City of Seattle, City Light Department.)
Official File – CCM Support

(W:\CT\Puget Sound Energy, Inc\Drafts\16053_PSE-SCL-PSANI MOA SCOPE CHANGE LTR AGMT.Doc)

Department of Energy

Bonneville Power Administration
P.O. Box 61409
Vancouver, WA 98666-1409

TRANSMISSION SERVICES

August XX, 2014

In reply refer to: TSE/TPP-2

Contract No. 14TX-16060
Letter Agreement

Ms. Booga Gilbertson
Vice President Operations Services
Puget Sound Energy, Inc.
P.O. Box 90868
Bellevue, WA 98009-0868

Mr. Phillip West
Customer Service Energy Officer
City of Seattle, City Light Department
700 Fifth Ave., Suite 2822
Seattle, WA 98104-5031

Dear Ms. Gilbertson and Mr. West:

The Bonneville Power Administration (BPA), Puget Sound Energy, Inc., (PSE) and City of Seattle, City Light Department (SCL) are parties to the Memorandum of Agreement (MOA), Contract No. 11TX-15450, relating to the Preferred Puget Sound Area Plan of Service Projects and Cost Allocation. The parties to the MOA are currently in the initial stages of development of the projects described in the MOA. As this has progressed, certain aspects of the MOA were identified that the parties believe need to be clarified.

This Agreement is intended to clarify BPA's obligations under the National Environmental Policy Act (NEPA) for its role in the MOA, as described in Section 8 of the MOA, as well as the nature of the Preferred Plan Projects described in the MOA for the purposes of NEPA.

With respect to environmental compliance BPA, as a Federal agency, has certain obligations and responsibilities under NEPA and other federal laws (collectively the NEPA review process) that it must fulfill before it can make a final decision concerning whether to participate in implementation of certain of the Preferred Plan Projects described in Section 3 of the MOA and the capital cost allocation described in Sections 4 and 5 of the MOA. Nothing in the MOA shall be construed as obligating or committing BPA to make a final decision concerning any of the Preferred Plan Projects and capital cost allocation before completing the NEPA review process. In addition, BPA reserves the right to determine the appropriate NEPA and other environmental compliance strategies for its actions under the MOA, and to choose any alternatives considered in the NEPA process, including the no-action alternative.

Furthermore, the parties acknowledge and agree that while the MOA identifies a number of Preferred Plan Projects to be undertaken by the parties, each of these projects could proceed independently from the others and that no single project is contingent or dependent upon another in the goal of relieving transmission congestion in the Puget Sound Area. As such, BPA, SCL, and PSE may elect to conduct separate environmental reviews for each project identified in the MOA.

In order to meet the project schedule, please sign all originals of this Agreement, retain one original for your records and return the remaining two originals to my attention at one of the following addresses at your earliest convenience, but not later than Close of Business on August x, 2014:

Formatted: Font: 11 pt

Formatted: Font: 11 pt

First Class Mail	Overnight Delivery Service
Bonneville Power Administration	Bonneville Power Administration
Mail Stop: TSE/TPP-2	Mail Stop: TSE/TPP-2
P.O. Box 61409	7500 NE 41st Street – Suite 130
Vancouver, WA 98666-1409	Vancouver, WA 98662

BPA will ensure that Puget and SCL have a full set of original signature pages.

Please do not hesitate to contact Justin Moffett at (503) 230-3233 or me at (360) 619-6015 if you would like to discuss this information.

Sincerely,

Toni L. Timberman
Senior Transmission Account Executive
Transmission Sales

CONCUR:

Formatted: Font: Times New Roman

PUGET SOUND ENERGY, INC.

By: _____

Name: _____
(Print/Type)

Title: _____

Date: _____

CITY OF SEATTLE,
CITY LIGHT DEPARTMENT

By: _____

Name: _____
(Print/Type)

Title: _____

Date: _____

From:	Timberman,Toni L (BPA) - TSE-TPP-2
To:	Gibson,Paula L (BPA) - TSES-TPP-2
Subject:	FW: 1605X PSANI MOA NEPA LTR AGMT 8_8 TT
Date:	Tuesday, August 12, 2014 11:39:00 AM
Attachments:	1605X PSANI MOA NEPA LTR AGMT 8_8 TT.doc

Did you send this one back to me?

From: Timberman,Toni L (BPA) - TSE-TPP-2
Sent: Friday, August 08, 2014 3:35 PM
To: Gibson,Paula L (BPA) - TSES-TPP-2
Subject: 1605X PSANI MOA NEPA LTR AGMT 8_8 TT

Some edits…check on FedEx address for Seattle. I think everything goes to Suite 3200 and gets distributed from there.

Department of Energy

Bonneville Power Administration
P.O. Box 61409
Vancouver, WA 98666-1409

TRANSMISSION SERVICES

August XX, 2014

In reply refer to: TSE/TPP-2

Contract No. 14TX-16060
Letter Agreement

Ms. Booga Gilbertson
Vice President Operations Services
Puget Sound Energy, Inc.
P.O. Box 90868
Bellevue, WA 98009-0868

Mr. Phillip West
Customer Service Energy Officer
City of Seattle, City Light Department
700 Fifth Ave., Suite 2822
Seattle, WA 98104-5031

Dear Ms. Gilbertson and Mr. West:

The Bonneville Power Administration (BPA), Puget Sound Energy, Inc., (PSE) and City of Seattle, City Light Department (SCL) are parties to the Memorandum of Agreement (MOA), Contract No. 11TX-15450, relating to the Preferred Puget Sound Area Plan of Service Projects and Cost Allocation. The parties to the MOA are currently in the initial stages of development of the projects described in the MOA. As this has progressed, certain aspects of the MOA were identified that the parties believe need to be clarified.

This Agreement is intended to clarify BPA's obligations under the National Environmental Policy Act (NEPA) for its role in the MOA, as described in Section 8 of the MOA, as well as the nature of the Preferred Plan Projects described in the MOA for the purposes of NEPA.

With respect to environmental compliance BPA, as a Federal agency, has certain obligations and responsibilities under NEPA and other federal laws (collectively the NEPA review process) that it must fulfill before it can make a final decision concerning whether to participate in implementation of certain of the Preferred Plan Projects described in Section 3 of the MOA and the capital cost allocation described in Sections 4 and 5 of the MOA. Nothing in the MOA shall be construed as obligating or committing BPA to make a final decision concerning any of the Preferred Plan Projects and capital cost allocation before completing the NEPA review process. In addition, BPA reserves the right to determine the appropriate NEPA and other environmental compliance strategies for its actions under the MOA, and to choose any alternatives considered in the NEPA process, including the no-action alternative.

Furthermore, the parties acknowledge and agree that while the MOA identifies a number of Preferred Plan Projects to be undertaken by the parties, each of these projects could proceed independently from the others and that no single project is contingent or dependent upon another in the goal of relieving transmission congestion in the Puget Sound Area. As such, BPA, SCL, and PSE may elect to conduct separate environmental reviews for each project identified in the MOA.

~~In order to meet the project schedule, p~~Please sign all originals of this Agreement, retain one original for your records and return the remaining two originals to my attention at one of the following addresses at your earliest convenience, but not later than Close of Business on August x, 2014:

First Class Mail	Overnight Delivery Service
Bonneville Power Administration	Bonneville Power Administration
Mail Stop: TSE/TPP-2	Mail Stop: TSE/TPP-2
P.O. Box 61409	7500 NE 41st Street – Suite 130
Vancouver, WA 98666-1409	Vancouver, WA 98662

BPA will ensure that Puget and SCL have a full set of original signature pages.

Please do not hesitate to contact Justin Moffett at (503) 230-3233 or me at (360) 619-6015 if you would like to discuss this information.

Sincerely,

Toni L. Timberman
Senior Transmission Account Executive
Transmission Sales

CONCUR:

PUGET SOUND ENERGY, INC.

By:

Name: _____
(Print/Type)

Title: _____

Date: _____

CITY OF SEATTLE,
CITY LIGHT DEPARTMENT

By: _____

Name: _____
(Print/Type)

Title: _____

Date: _____

Formatted: Font: 11 pt

Formatted: Font: 11 pt

Formatted: Font: 11 pt

Formatted: Font: Times New Roman

Formatted: Font: Times New Roman

Formatted: Font: Times New Roman

Formatted: Font: Times New Roman

From: Timberman,Toni L (BPA) - TSE-TPP-2
To: Gibson,Paula L (BPA) - TSES-TPP-2
Subject: RE: 1605X PSANI MOA NEPA LTR AGMT 8_8 TT
Date: Tuesday, August 12, 2014 11:55:00 AM

His desk might be in 2822, but for sending contracts it should go to 3200. Not sure what the CDM info is used for.

From: Gibson,Paula L (BPA) - TSES-TPP-2
Sent: Tuesday, August 12, 2014 11:54 AM
To: Timberman,Toni L (BPA) - TSE-TPP-2
Subject: RE: 1605X PSANI MOA NEPA LTR AGMT 8_8 TT

Yes, CDM incorrectly shows him in suite 2822. I will get it corrected.

From: Timberman,Toni L (BPA) - TSE-TPP-2
Sent: Tuesday, August 12, 2014 11:39 AM
To: Gibson,Paula L (BPA) - TSES-TPP-2
Subject: FW: 1605X PSANI MOA NEPA LTR AGMT 8_8 TT

Did you send this one back to me?

From: Timberman,Toni L (BPA) - TSE-TPP-2
Sent: Friday, August 08, 2014 3:35 PM
To: Gibson,Paula L (BPA) - TSES-TPP-2
Subject: 1605X PSANI MOA NEPA LTR AGMT 8_8 TT

Some edits…check on FedEx address for Seattle. I think everything goes to Suite 3200 and gets distributed from there.

Department of Energy

Bonneville Power Administration
P.O. Box 61409
Vancouver, WA 98666-1409

TRANSMISSION SERVICES

August XX, 2014

In reply refer to: TSE/TPP-2

Contract No. 14TX-16060
Letter Agreement

Ms. Booga Gilbertson
Vice President Operations Services
Puget Sound Energy, Inc.
P.O. Box 90868
Bellevue, WA 98009-0868

Mr. Phillip West
Customer Service Energy Officer
City of Seattle, City Light Department
700 Fifth Ave., Suite 2822
Seattle, WA 98104-5031

Dear Ms. Gilbertson and Mr. West:

The Bonneville Power Administration (BPA), Puget Sound Energy, Inc., (PSE) and City of Seattle, City Light Department (SCL) are parties to the Memorandum of Agreement (MOA), Contract No. 11TX-15450, relating to the Preferred Puget Sound Area Plan of Service Projects and Cost Allocation. The parties to the MOA are currently in the initial stages of development of the projects described in the MOA. As this has progressed, certain aspects of the MOA were identified that the parties believe need to be clarified.

This Agreement is intended to clarify BPA's obligations under the National Environmental Policy Act (NEPA) for its role in the MOA, as described in Section 8 of the MOA, as well as the nature of the Preferred Plan Projects described in the MOA for the purposes of NEPA.

With respect to environmental compliance BPA, as a Federal agency, has certain obligations and responsibilities under NEPA and other federal laws (collectively the NEPA review process) that it must fulfill before it can make a final decision concerning whether to participate in implementation of certain of the Preferred Plan Projects described in Section 3 of the MOA and the capital cost allocation described in Sections 4 and 5 of the MOA. Nothing in the MOA shall be construed as obligating or committing BPA to make a final decision concerning any of the Preferred Plan Projects and capital cost allocation before completing the NEPA review process. In addition, BPA reserves the right to determine the appropriate NEPA and other environmental compliance strategies for its actions under the MOA, and to choose any alternatives considered in the NEPA process, including the no-action alternative.

Furthermore, the parties acknowledge and agree that while the MOA identifies a number of Preferred Plan Projects to be undertaken by the parties, each of these projects could proceed independently from the others and that no single project is contingent or dependent upon another in the goal of relieving transmission congestion in the Puget Sound Area. As such, BPA, SCL, and PSE may elect to conduct separate environmental reviews for each project identified in the MOA.

~~In order to meet the project schedule, p~~Please sign all originals of this Agreement, retain one original for your records and return the remaining two originals to my attention at one of the following addresses at your earliest convenience, but not later than Close of Business on August x, 2014:

First Class Mail	Overnight Delivery Service
Bonneville Power Administration	Bonneville Power Administration
Mail Stop: TSE/TPP-2	Mail Stop: TSE/TPP-2
P.O. Box 61409	7500 NE 41st Street – Suite 130
Vancouver, WA 98666-1409	Vancouver, WA 98662

BPA will ensure that Puget and SCL have a full set of original signature pages.

Please do not hesitate to contact Justin Moffett at (503) 230-3233 or me at (360) 619-6015 if you would like to discuss this information.

Sincerely,

Toni L. Timberman
Senior Transmission Account Executive
Transmission Sales

CONCUR:

PUGET SOUND ENERGY, INC.

By:

Name: _____
(Print/Type)

Title: _____

Date: _____

CITY OF SEATTLE,
CITY LIGHT DEPARTMENT

By: _____

Name: _____
(Print/Type)

Title: _____

Date: _____

Formatted: Font: 11 pt

Formatted: Font: 11 pt

Formatted: Font: 11 pt

Formatted: Font: Times New Roman

Formatted: Font: Times New Roman

Formatted: Font: Times New Roman

Formatted: Font: Times New Roman

From:	Gibson,Paula L (BPA) - TSES-TPP-2
To:	Timberman,Toni L (BPA) - TSE-TPP-2
Subject:	RE: help please on FTC for PSANI MOA
Date:	Tuesday, August 12, 2014 12:07:36 PM
Attachments:	16062_PSANI_MOA Financial Terms and Conditions.doc

Here it is.

From: Timberman,Toni L (BPA) - TSE-TPP-2
Sent: Tuesday, August 12, 2014 11:43 AM
To: Gibson,Paula L (BPA) - TSES-TPP-2
Subject: FW: help please on FTC for PSANI MOA

I don't have any "guts" to put in this Letter Agreement yet, but could you assign a contract number so we can track it while it is being developed?
Thanks!

From: Timberman,Toni L (BPA) - TSE-TPP-2
Sent: Wednesday, July 16, 2014 6:05 PM
To: Jusupovic,Jana D (BPA) - TPC-TPP-4; Holst,Michele R (BPA) - TEPO-TPP-1; Shier,Robert P (BPA) - FRG-2
Cc: Gibson,Paula L (BPA) - TSES-TPP-2
Subject: help please on FTC for PSANI MOA

I have attached the PSANI MOA, Contract No. 11TX-15450, and my very rough draft attempt at a letter agreement intended to meet the requirement in Section 7 of the MOA, to develop method and schedule for exchange of funds.

I have pasted in bits of language from the standard BPA Financial Terms and Conditions that is included with our reimbursable agreements with customers…but this is a different animal, and I don't know quite how to structure it.

I listed the issues that we need to capture in this agreement…please add more as needed.

Any help you can provide would be much appreciated. I would like to have a draft to send to Puget and Seattle by August 15 if possible.

Thanks,
Toni

Department of Energy

Bonneville Power Administration
P.O. Box 61409
Vancouver, WA 98666-1409

TRANSMISSION SERVICES

~~July 3~~August X, 2014

In reply refer to: TSE/TPP-2

Contract No. 14TX-16062
Letter Agreement

Ms. Booga Gilbertson	Mr. Phillip West
Vice President, Operations Services	Customer Service Energy Officer
Puget Sound Energy, Inc.	City of Seattle, City Light Department
10885 NE 4th Street, PSE – 11S	700 Fifth Avenue, Suite 3200
Bellevue, WA 98004	Seattle, WA 98104-5031

Dear Ms. Gilbertson and Mr. West:

The Bonneville Power Administration (BPA), the City of Seattle, City Light Department (SCL) and Puget Sound Energy, Inc. (PSE) are parties to the Memorandum of Agreement (MOA), Contract No. 11TX-15450, relating to the Preferred Puget Sound Area Plan of Service Projects and Cost Allocation. The parties to the MOA are currently in the initial stages of development of the projects described in the MOA. As this has progressed certain aspects of the MOA were identified that the parties believe need to be clarified.

This Letter Agreement is to meet the requirement in Section 7, Payment Schedule, of the MOA, which states that "The Parties shall agree in writing to the method and schedule for the cost share contributions to be made under this MOA."

BPA, Puget and Seattle agree that waiting until the completion of a project before exchanging funds (as specified in Section 7) is not the preferred course of action, given the potential for multiple years delay for completion of a project. An alternative arrangement is described below.

The following Financial Terms and Conditions shall apply to all cost sharing obligations incurred under the MOA:

FINANCIAL TERMS AND CONDITIONS STATEMENT

Each Party's cost obligation for performance of the duties associated with construction of each Preferred Plan Project shall be as specified in Sections 4 and 5 of the MOA. The cost of performing the duties associated with construction of each Preferred Plan Project shall be the actual cost of doing the work plus an overhead rate of xx% for labor and yy% for materials-,

Comment [TLT1]: Specify separate overheads for each Party?

DRAFT

representing the indirect costs of the project office plus the contractual support costs of contract negotiation, billing and accounting functions, and contract management.

Payments made to BPA shall be held in an account established for this Agreement. If BPA needs additional funds to complete the work at any time during performance of the project, BPA may request, in writing, for PSE to advance such additional funds to BPA for deposit in the account. PSE shall advance such additional funds within 30 days of BPA's written request, and BPA may temporarily stop work until PSE supplies the requested funds. If PSE does not advance such additional funds by the due date or, if at any time before completion of the project PSE elects to stop work under this Agreement, BPA will cease all work and restore, as a cost to the project at PSE's expense, government facilities and/or records (1) to their condition prior to the beginning of work under this Agreement, or (2) to some other mutually agreeable condition.

Within a reasonable time after completion of the project BPA shall make a full accounting to PSE showing the actual costs charged against the account. BPA shall either remit any unexpended balance in the account to PSE or bill for any costs in excess of the deposits in the account. PSE shall pay any excess costs within 30 days of the billing.

Payments not received within 30 days of the invoice date will accrue interest on the amount due from the invoice date to the date paid, at an annual interest rate equal to the higher of i) the prime rate (as reported in the Wall Street Journal in the first issue published during the month in which payment by PSE is due) plus 4 percent; or ii) such prime rate multiplied by 1.5.

- Language if cost is exceeding estimate in MOA –
- Periodic (every six months?) update on status of project and where it stands with respect to estimated cost
- Provisions for each party to invoice the others
- And???

Formatted: Bulleted + Level: 1 + Aligned at: 0.04" + Indent at: 0 29"

Formatted: Bulleted + Level: 1 + Aligned at: 0.04" + Indent at: 0 29"

Formatted: List Paragraph, No bullets or numbering

Formatted: Bulleted + Level: 1 + Aligned at: 0.04" + Indent at: 0 29"

Formatted: List Paragraph, No bullets or numbering

Formatted: Bulleted + Level: 1 + Aligned at: 0.04" + Indent at: 0 29"

Formatted: List Paragraph, No bullets or numbering

Please sign all three originals of this Agreement where indicated, returning two originals to BPA one of the addresses listed below at one of the following addresses. The remaining original is for your records. BPA will ensure that Puget and SCL have a full set of original signature pages.

In order to meet the project schedule, the executed Agreement must be received by ~~c~~Close of ~~b~~Business (COB) August 1, 2014. If BPA does not receive the executed Agreement by COB August 1, 2014, this offer Letter Agreement will be considered withdrawn.

First Class Mail	Overnight Delivery Service
Bonneville Power Administration	Bonneville Power Administration
Mail Stop: TSE/TPP-2	Mail Stop: TSE/TPP-2
P.O. Box 61409	7500 NE 41st Street – Suite 130
Vancouver, WA 98666-1409	Vancouver, WA 98662

DRAFT

If you have any questions, please call me at (360) 619-6015.

Sincerely,

Toni L. Timberman
Senior Transmission Account Executive
Transmission Sales

CONCUR:

PUGET SOUND ENERGY, INC.

By: _____

Name: _____
(Print/Type)

Title: _____

Date: _____

CITY OF SEATTLE,
CITY LIGHT DEPARTMENT

By: _____

Name: _____
(Print/Type)

Title: _____

Date: _____

DRAFT

bcc:
R. Shier – FRG-2
P. Walters – FRG-2
B. Bennett – LT-7
C. Hamel – TEP/TPP-1
S. Kannan – TFB/DOB-1
J. Jusupovic – TPC/TPP-4
D. Sauer – TPCC/TPP-4
T. Van Cleave – TPCC/TPP-4
J. Brank – TPCV/OLYMPIA
P. Fiedler – TPCV/TPP-4
T. Timberman – TSE/TPP-2
P. Gibson – TSES/TPP-2
Customer File – TPC/TPP-4 (ED-21-11/Tacoma Power)
Customer File – TSE/TPP-2 (TM-11/Tacoma Power)
PWA File – TPC/TPP-4 (N0310/Latest Status)
Official File – CCM_Support (Agreement 14TP-10657)

DRAFT

Contract No. 11TX-15450

MEMORANUDUM OF AGREEMENT

executed by the

UNITED STATES OF AMERICA

DEPARTMENT OF ENERGY

acting by and through the

BONNEVILLE POWER ADMINISTRATION

and

THE CITY OF SEATTLE

acting by and through its

CITY LIGHT DEPARTMENT

and

PUGET SOUND ENERGY, INC.

(Relating to the Preferred Puget Sound Area Plan of Service Projects and Cost Allocation)

This MEMORANDUM OF AGREEMENT (MOA) is executed by the UNITED STATES OF AMERICA, Department of Energy, acting by and through the BONNEVILLE POWER ADMINISTRATION (BPA), THE CITY OF SEATTLE, acting by and through its CITY LIGHT DEPARTMENT (Seattle City Light), and PUGET SOUND ENERGY INC. (Puget). BPA, Seattle City Light, and Puget are sometimes referred to individually as "Party" and collectively as "Parties".

WHEREAS, BPA owns and is responsible for the reliable operation of the Federal Columbia River Transmission System (FCRTS),

WHEREAS, Seattle City Light and Puget each own and operate electric systems that are interconnected with the FCRTS in the Puget Sound Area and electric power is delivered within those electric systems, and to or from them by BPA over the FCRTS,

WHEREAS, the Puget Sound Area experiences periods of transmission congestion that may require mitigation to maintain reliable operation of the Puget Sound Area Interconnection, including in some cases, curtailments of firm transmission service,

WHEREAS, as of February 2011, the Parties entered into Contract No. 11TX-15290, "Temporary Operational Support Program Agreement," that provides for voluntary changes in planned generation, including an increase in Puget Sound Area generation, as temporary and short-term measures for relieving forecasted transmission congestion conditions that are expected to adversely affect the reliable operation of the Puget Sound Area Interconnection,

WHEREAS, representatives from each of the Parties and other entities participated in regional studies to develop a long term plan, and implement a range of physical improvements to preserve the reliable operation of the Puget Sound Area interconnection, and reduce the need to curtail firm transmission service,

WHEREAS, the Parties have identified the projects described herein that, when taken as a whole, are expected to preserve the reliable operation of the Puget Sound Area Interconnection, and reduce the need to curtail firm transmission service; and it is in their individual and collective interests to continue to support the efforts needed to carry out these projects, and

WHEREAS, the transmission congestion affecting the Puget Sound Area interconnection is a shared problem, and the projects and cost sharing arrangements provided herein are appropriate.

NOW THEREFORE, in consideration of the mutual obligations and undertakings herein, the sufficiency of which is acknowledged, the Parties agree as follows:

1. DEFINITIONS

(a) "Bothell to SnoKing Reconductor Project" means the project identified in the Preferred Plan of Service in which Seattle City Light will reconductor the existing Bothell to SnoKing No. 1 and No. 2 230 kV lines with high-temperature conductor.

(b) "BPA Preferred Plan Projects" means, collectively, the Covington 500 kV Transformer Addition Project and the Northern Intertie Remedial Action Scheme ("RAS") Improvement Project.

(c) "Broad Street Inductor Project" means the project identified in the Preferred Plan of Service in which Seattle City Light will add series inductors (up to 10 ohm) to the Massachusetts-Broad Street 115 kV line.

(d) "ColumbiaGrid" means the Washington non-profit membership corporation formed to improve the operational efficiency, reliability, and planned expansion of the Pacific Northwest transmission grid, the

eight members of which, as of the Effective Date, are Avista Corporation; BPA; Public Utility District No. 1 of Chelan County, Washington; Public Utility District No. 2 of Grant County, Washington; Puget; Seattle City Light; Public Utility District No. 1 of Snohomish County, Washington; and Tacoma Power.

(e) "Covington 500 kV Transformer Addition Project" means the project identified in the Preferred Plan of Service in which BPA will install a third 500–230 kV transformer at the BPA Covington Substation.

(f) "Delridge to Duwamish Reconductor Project" means the project identified in the Preferred Plan of Service in which Seattle City Light will reconductor the existing Delridge to Duwamish 230 kV line with high-temperature conductor.

(g) "Lakeside 230 kV Transformer Addition Project" means the project identified in the Preferred Plan of Service in which Puget will install a 230–115 kV transformer at the Puget Lakeside Substation.

(h) "Maple Valley to SnoKing Reconductor Project" means the project identified in the Preferred Plan of Service in which Seattle City Light will reconductor the existing Maple Valley to SnoKing 230 kV line with high-temperature conductor.

(i) "North Downtown Inductor Project" means the project identified in the Preferred Plan of Service in which Seattle City Light will add series inductors (up to 10 ohm) to the East Pine-Broad Street line as part of Seattle City Light's North Downtown Substation Project.

(j) "Northern Intertie RAS Improvement Project" means the project identified in the Preferred Plan of Service in which BPA will install new software for and re-wire electrical protection devices on the Northern Intertie RAS.

(k) "Northern Intertie RAS" means the existing BPA pre-programmed set of automatic operating steps that are designed to protect the regional high voltage electric grid in the event of a loss of one of the two Custer-Monroe 500 kV lines.

(l) "Preferred Plan of Service" means the "Updated Recommended Transmission Expansion Plan for the Puget Sound Area to Support Winter South-to-North Transfers" approved by ColumbiaGrid on October 28, 2011, a copy of which is attached as Exhibit A to this MOA.

(m) "Preferred Plan Projects" means, collectively, the BPA Preferred Plan Projects, the Puget Preferred Plan Projects, and the Seattle City Light Preferred Plan Projects.

(n) "Puget Preferred Plan Projects" means the Sammamish to Lakeside to Talbot Rebuild Project and the Lakeside 230 kV Transformer Addition Project.

(o) "Sammamish to Lakeside to Talbot Rebuild Project" means the project identified in the Preferred Plan of Service in which Puget will upgrade Puget's existing Sammamish to Lakeside to Talbot 115 kV lines to 230 kV operation using Puget's existing Sammamish to Lakeside to Talbot utility corridor.

(p) "Seattle City Light Preferred Plan Projects" means the Bothell to SnoKing Reconductor Project, the Broad Street Inductor Project, the North Downtown Inductor Project, and the Delridge to Duwamish Reconductor Project.

2. TERM

The term of this MOA shall be effective on the date of execution by all Parties (Effective Date) and shall continue until the earliest to occur of the following: (i) the date of completion of the last of the Preferred Plan Projects; (ii) a Party terminates this MOA pursuant to section 5(c) of this MOA; or (iii) December 31, 2020.

3. PREFERRED PLAN OF SERVICE PROJECTED PROJECT COMPLETION SCHEDULE AND COST

(a) **BPA Preferred Plan Projects**. Each Party acknowledges that, as of the Effective Date, the projected project completions schedule and capital costs of the BPA Preferred Plan Projects are as follows:

BPA Preferred Plan Project	Projected Completion	Projected Capital Cost
1. Covington 500 kV Transformer Addition Project	2018	$56.2 million
2. Northern Intertie RAS Improvement Project	2014	$4.0 million

(b) **Puget Preferred Plan Projects.** Each Party acknowledges that, as of the Effective Date, the projected project completions schedule and capital costs of the Puget Preferred Plan Projects are as follows:

Puget Preferred Plan Project	Projected Completion	Projected Capital Cost
1. Sammamish to Lakeside to Talbot Rebuild Project	2017	$45.0 million (single circuit) or $41.3 million (double circuit)
2. Lakeside 230 kV Transformer Addition Project	2017	$22.0 million

(c) **Seattle City Light Preferred Plan Projects.** Each Party acknowledges that, as of the Effective Date, the projected project completions schedule and capital costs of the Seattle City Light Preferred Plan Projects are as follows:

Seattle City Light Preferred Plan Project	Projected Completion	Projected Capital Cost
1. Bothell to SnoKing Reconductor Project	2017	$2.5 million
2. Broad Street Inductor Project	2017	$7.3 million*
3. North Downtown Inductor Project	2017	$4.4 million*
4. Delridge to Duwamish Reconductor Project	2016	$1.9 million

(d) **Preferred Plan Project Not Planned for Construction Based On the Construction of the Puget Preferred Plan Projects.** Each Party acknowledges that, the construction of the Puget Preferred Plan Projects negates the need for the construction of the Maple Valley to

* The projected capital costs of the Broad Street Inductor Project and the North Downtown Inductor Project do not reflect any projected costs for land acquisition. As of the Effective Date, the Parties acknowledge that Seattle City Light may have to acquire land to accomplish the Broad Street Inductor Project, and the actual capital costs of the Broad Street Inductor Project will, if necessary, reflect the actual costs of land acquisition for such project. As of the Effective Date, the Parties do not anticipate that the North Downtown Inductor Project will require Seattle City Light to acquire any land.

SnoKing Reconductor Project. Each Party acknowledges that, as of the Effective Date, the projected project completions schedule and capital costs of the Maple Valley to SnoKing Reconductor Project are as follows:

Preferred Plan Project	Projected Completion	Projected Capital Cost
Maple Valley to SnoKing Reconductor Project	N/A	$16.1 million

4. PRELIMINARY CAPITAL COST ALLOCATION

As of the Effective Date of this MOA, the Parties agree to share in the capital costs of Preferred Plan Projects as follows:

(a) **BPA Preferred Plan Projects**. BPA shall pay the entire actual capital cost of each of (i) the Covington 500 kV Transformer Addition Project and (ii) the Northern Intertie RAS Improvement Project

(b) **Seattle City Light Preferred Plan Projects.** BPA, Puget, and Seattle City Light shall each pay one-third of the total actual capital cost of each of (i) the Bothell to SnoKing Reconductor Project; (ii) the Delridge to Duwamish Reconductor Project; (iii) the Broad Street Inductor Project; and (iv) the North Downtown Inductor Project.

(c) **Puget Preferred Plan Projects.** BPA and Seattle City Light shall each pay to Puget an amount equal to one-third of the adjusted projected capital cost of the Maple Valley to SnoKing Reconductor Project, which adjusted projected capital cost shall be determined as provided in the following table:

Projected Capital Cost of the Maple Valley to SnoKing Reconductor Project	=	$16.1 million * Cost Differences in Reconductor Projects

where:

Cost Differences in Reconductor Projects	=	the quotient of

(i) the sum of the actual capital costs of the Delridge to Duwamish Reconductor Project and Bothell to SnoKing Reconductor Project and

(ii) the sum of the projected capital costs of the Delridge to Duwamish Reconductor Project and Bothell to SnoKing Reconductor Project identified in section 3(c) above (i.e., $4.4 million)

5. FINAL CAPITAL COST ALLOCATION AND OPTION OF ELECTION TO CANCEL

(a) The allocations identified in section 4 are based on preliminary planning capital cost projections. The final capital cost allocation for the Seattle City Light Preferred Plan Projects shall be based on actual design and construction capital costs for each of the Seattle City Light Preferred Plan Projects, and the final capital cost allocation for the Puget Preferred Plan Projects shall be in accordance with the formula proscribed in section 4(a) above. The Parties shall review such actual design and construction capital costs and schedules and shall agree in writing to the final capital cost allocation.

(b) Each Party reserves the right to cancel any Preferred Plan Project for which such Party is the sponsor if such Party determines that

(i) the actual capital cost of such Preferred Plan Project is likely to exceed the projected capital cost of such Preferred Plan Project by a factor that is equal to or in excess of thirty percent (30%), or

(ii) the projected in-service date of the Preferred Plan Project will be more than twenty-four (24) months later than the projected completion date identified in section 3 above for such Preferred Plan Project.

If a Party elects to cancel a Preferred Plan Project for which such Party is a sponsor under this section 5(b), such Party shall provide written notice to such other Parties within five (5) days of such election. Within a reasonable period of time after receipt of such written notice, representatives of the Parties shall convene and identify alternative projects that the Parties expect will preserve the reliable operation of the Puget Sound Area Interconnection and reduce the need to curtail firm transmission service in a manner similar to the project cancelled pursuant to section 5(b). If the Parties cannot agree in good faith upon an alternative project to replace a project cancelled pursuant to section 5(b) within a reasonable period following receipt of written notice of

such termination, then any Party may terminate this MOA upon 90 days' written notice to the other Parties.

6. RESPONSIBILITY FOR ALL OTHER COSTS

(a) Each Party shall be solely responsible for the Preferred Plan Project for which such Party is the sponsor, less the contributions from the other Parties as provided in section 4. This MOA only affects the cost sharing for the Preferred Plan Projects.

(b) Each Party shall own the assets for the Preferred Plan Project for which such Party is the sponsor and shall be solely responsible for the operation and maintenance costs of such assets. Each Party shall be entitled to any capacity increases to its transmission system that results from any assets installed pursuant to this MOA.

(c) If any Party enhances a Preferred Plan Project after completion of such Preferred Plan Project to meet such Party's needs, the cost of such future enhancements shall be borne solely by such Party. Each Party shall attempt in good faith to coordinate with the other Parties with respect to any future enhancements to a Preferred Plan Project to minimize or eliminate any impact to the interconnected electric systems of such other Parties.

7. PAYMENT SCHEDULE

Payments will be made at the completion of individual projects. The Parties shall agree in writing to the method and schedule for the cost share contributions to be made under this MOA.

8. NATIONAL ENVIRONMENTAL POLICY ACT ASSESSMENT

To the extent that BPA's financial contributions under this MOA are determined to trigger the need for analysis of projects under the National Environmental Policy Act, the Parties shall coordinate such assessment.

9. JOINT COMMUNICATIONS

The Parties shall coordinate joint communications regarding presentations of the preferred plan of service to the public.

10. GENERAL PROVISIONS

(a) This MOA, including documents expressly incorporated by reference, constitutes the entire agreement between the Parties. It supersedes all previous communications, representations, or contracts, either written or oral, which purport to describe or embody the subject matter of this MOA.

(b) No amendment of this MOA shall be of any force or effect unless set forth in a written instrument signed by authorized representatives of each Party.

(c) This MOA is made and entered into for the sole benefit of the Parties, and the Parties intend that no other person or entity shall be a direct or indirect beneficiary of this MOA.

(d) This MOA shall be interpreted consistent with and governed by federal law.

(e) In the event that any provision of this MOA is determined to be invalid or unenforceable for any reason, in whole or part, the remaining provisions of this MOA shall be unaffected thereby and shall remain in full force and effect to the fullest extent permitted by law, and such invalid or unenforceable provision shall be replaced by the Parties with a provision that is valid and enforceable and that comes closest to expressing the Parties' intention with respect to such invalid or unenforceable provision.

(f) Each Party shall be solely responsible for and shall pay its own costs and expenses incurred by it in connection with the negotiation of this MOA.

(g) Whenever this MOA requires or provides that (i) a notice be given by a Party to any other Party or (ii) a Party's action requires the approval or consent of any other Party, such notice, consent or approval shall be given in writing and shall be given in accordance with the provisions of Exhibit B to this MOA.

(h) This MOA is binding on any successors and assigns of the Parties. No Party may otherwise transfer or assign this MOA, in whole or in part, without the other Parties' written consent. Such consent shall not be unreasonably withheld.

(i) Nothing contained in this MOA shall be construed as creating a corporation, company, partnership, association, joint venture or other entity, nor shall anything contained in this MOA be construed as

creating or requiring any fiduciary relationship between the Parties. No Party shall be responsible hereunder for the acts or omissions of any other Party. Nothing herein shall preclude (i) a Party from taking any action (or having its affiliates take any action) with respect to any other transmission project, including any such project that may compete with the projects provided herein, or (ii) the Parties jointly from entering into MOAs with third parties for the joint development, construction, ownership or operation of any project or for the provision of transmission capacity from such project.

(j) Other than the obligation to pay amounts due under Section 4, in no event shall any Party be liable to any other Party under any provision of this MOA for any losses, damages, costs or expenses for any direct, special, indirect, incidental, consequential, or punitive damages, including but not limited to loss of profit or revenue, whether based in whole or in part in contract or in tort, including negligence, strict liability, or any other theory of liability; provided, however, that damages for which a Party may be liable to any other Party under another agreement will not be considered to be special, indirect, incidental, or consequential damages hereunder.

(k) The Parties shall not be in breach of their respective obligations to the extent the failure to fulfill any obligation is due to an Uncontrollable Force. "Uncontrollable Force" means an event beyond the reasonable control of, and without the fault or negligence of, the Party claiming the Uncontrollable Force, that prevents that Party from performing its contractual obligations under this MOA and which, by exercise of that party's reasonable care, diligence and foresight, such Party was unable to avoid. Uncontrollable Forces include, but are not limited to:

(1) strikes or work stoppage;

(2) floods, earthquakes, or other natural disasters; terrorist acts; and

(3) final orders or injunctions issued by a court or regulatory body having competent subject matter jurisdiction which the Party claiming the Uncontrollable Force, after diligent efforts, was unable to have stayed, suspended, or set aside pending review by a court of competent subject matter jurisdiction.

Neither the unavailability of funds or financing, nor conditions of national or local economies or markets shall be considered an Uncontrollable Force. The economic hardship of a Party shall not

constitute an Uncontrollable Force. Nothing contained in this provision shall be construed to require any Party to settle any strike or labor dispute in which it may be involved.

If an Uncontrollable Force prevents a Party from performing any of its obligations under this MOA, such party shall: (1) immediately notify the other Parties of such Uncontrollable Force by any means practicable and confirm such notice in writing as soon as reasonably practicable; (2) use its best efforts to mitigate the effects of such Uncontrollable Force, remedy its inability to perform, and resume full performance of its obligation hereunder as soon as reasonably practicable; (3) keep the other Parties apprised of such efforts on an ongoing basis; and (4) provide written notice of the resumption of performance. Written notices sent under this section 10(k) must comply with Exhibit B, Notices and Contact Information.

11. WAIVER

No waiver of any provision or breach of this MOA shall be effective unless such waiver is in writing and signed by the waiving Party, and any such waiver shall not be deemed a waiver of any other provision of this MOA or any other breach of this MOA.

12. SIGNATURE

The Parties have caused this MOA to be executed as of the latest date all Parties have signed this MOA.

CITY OF SEATTLE CITY LIGHT DEPARTMENT		UNITED STATES OF AMERICA Department of Energy Bonneville Power Administration	
By:	Jorge Carrasco	By:	Harder Juj
Name: *(Print/ Type)*	Jorge Carrasco	Name: *(Print/ Type)*	Harder Juj
Title:	Superintendent	Title:	VP, Planning + Asset Mgmt.
Date:	1/31/12	Date:	1/31/12

PUGET SOUND ENERGY, INC.

By: Susan McLain

Name: Susan McLain
(Print/ Type)

Title: Senior Vice President Delivery Operations

Date: 1/31/12

EXHIBIT A
PREFERRED PLAN OF SERVICE

EXHIBIT B
NOTICES

Any notice required under this MOA shall be in writing and shall be delivered in person; or with proof of receipt by a nationally recognized delivery service or by United States Certified Mail. Notices are effective when received. Either Party may change the name or address for receipt of notice by providing notice of such change. The Parties shall deliver notices to the following person and address:

If to Seattle City Light:

Attention:
Phone:
Fax:
Email:

If by First Class Mail:

City of Seattle, City Light Department
(Customer Address)
(Customer City, State, Zip)

If by Overnight Delivery Service:
City of Seattle, City Light Department
(Customer Address)
(Customer City, State, Zip)

If to BPA:

Attention:
Phone:
Fax:
Email:

If by First Class Mail:

Bonneville Power Administration
P.O. Box 61409
Vancouver, WA 98666-1409

If by Overnight Delivery Service:
Bonneville Power Administration – TSE/TPP-2
7500 NE 41st Street – Suite 130
Vancouver, WA 98662

If to the Puget:

Attention:
Phone:
Fax:
Email:

If by First Class Mail:

Puget Sound Energy, Inc.
P.O. Box 97034
Bellevue, WA 98009-9734

If by Overnight Delivery Service:
Puget Sound Energy, Inc.
10885 N.E. 4th Street, Suite 1100
Bellevue, WA 98004-5591

EXHIBIT A
PREFERRED PLAN OF SERVICE

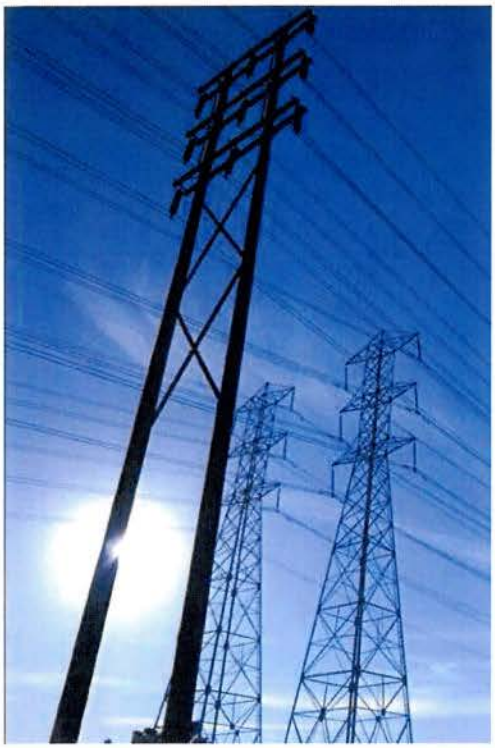

Updated Recommended Transmission Expansion Plan for the Puget Sound Area to Support Winter South-to-North Transfers

ColumbiaGrid

Puget Sound Area Study Team

Bonneville Power Administration, Puget Sound Energy, Seattle City Light, Snohomish County PUD, Tacoma Power, Powerex

Provisional Approval by the Study Team on April 25, 2011

Final Approval by the Study Team on October 28, 2011

Introduction and Conclusions

In October of 2010, the Puget Sound Area Study Team issued a report entitled "Transmission Expansion Plan for the Puget Sound Area." The report is available via the ColumbiaGrid website. The report details a transmission plan for the Puget Sound region that would, as a basic requirement, provides for reliable system performance while significantly improving the ability of the transmission grid to support power transfers between the Northwest and British Columbia. Since the release of the original report, the following changes have occurred that have led to the need for the Puget Sound Area Study Team to revise their transmission plan:

1) ***Additional scenarios*** – The Puget Sound area utilities have been meeting regularly since the publication of the original report in October 2010 and have developed several additional scenarios to be studied (e.g., the addition of a new Broad Street-Massachusetts 115 kV underground cable). In response, the study team repeated their prior analysis for the critical winter south-to-north condition for the new scenarios. The results of this analysis are shown in the table provided in Appendix A.

2) ***Increased likelihood that Puget Sound Energy will move forward with Sammamish-Lakeside-Talbot project*** – Since the development of the original plan, Puget Sound Energy has further developed their plan to rebuild two 115 kV lines to 230 kV (Sammamish-Lakeside-Talbot #1 and #2) and provide new 230/115 kV transformation at their Lakeside Substation. Although both lines will be rebuilt, only one of the lines may be initially energized at 230 kV. As stated in the prior report, this facility addition can delay the need to reconductor the Maple Valley-SnoKing 230 kV lines beyond the ten-year transmission planning horizon.

   The study team decided that since Puget Sound Energy is moving forward with this plan, the Sammamish-Lakeside-Talbot project should be listed as the proposed project in the plan instead of the Maple Valley-SnoKing reconductor. This project will give Puget Sound Energy the ability to provide necessary load support at Lakeside which cannot be achieved with the Maple Valley-SnoKing reconductor project, while providing similar Transmission Curtailment Risk Measure (TCRM) benefits as the Maple Valley-SnoKing reconductor project. A downside of the Sammamish-Lakeside-Talbot project is that its south-to-north Total Transfer Capability (TTC) is lower as compared to the Maple Valley-SnoKing reconductor. However, the Sammamish-Lakeside-Talbot project has additional benefits over the Maple Valley-SnoKing reconductor project in that it provides an additional 230 kV transmission path through the Puget Sound area and makes it feasible to reconductor rather than rebuild the Bothell-SnoKing 230 kV lines.

3) ***Increased likelihood that Seattle City Light will move forward with their North Downtown Substation Project*** – Since the development of the plan, Seattle City Light has indicated that plans to add a new North Downtown Substation have become more likely. The final plan is still being developed by SCL. The option studied includes a new underground cable (North Downtown-Massachusetts 230 kV), a new 115 kV line between North Downtown and Canal, and two 230/115 kV transformers at the proposed substation (see the following Figure One). This project was studied in the prior plan and, as identified previously, a third set of series inductors will be required on the new Canal-North Downtown 115 kV line with the addition of the North Downtown Substation. The plan for the system without, or prior to, the addition of the North Downtown Substation remains the same (adding series inductors on the two 115 kV underground cables). There is not a significant impact on the plan with or without the North Downtown Substation project as long as the project includes a third set of series inductors on the new North Downtown-Canal 115 kV line.

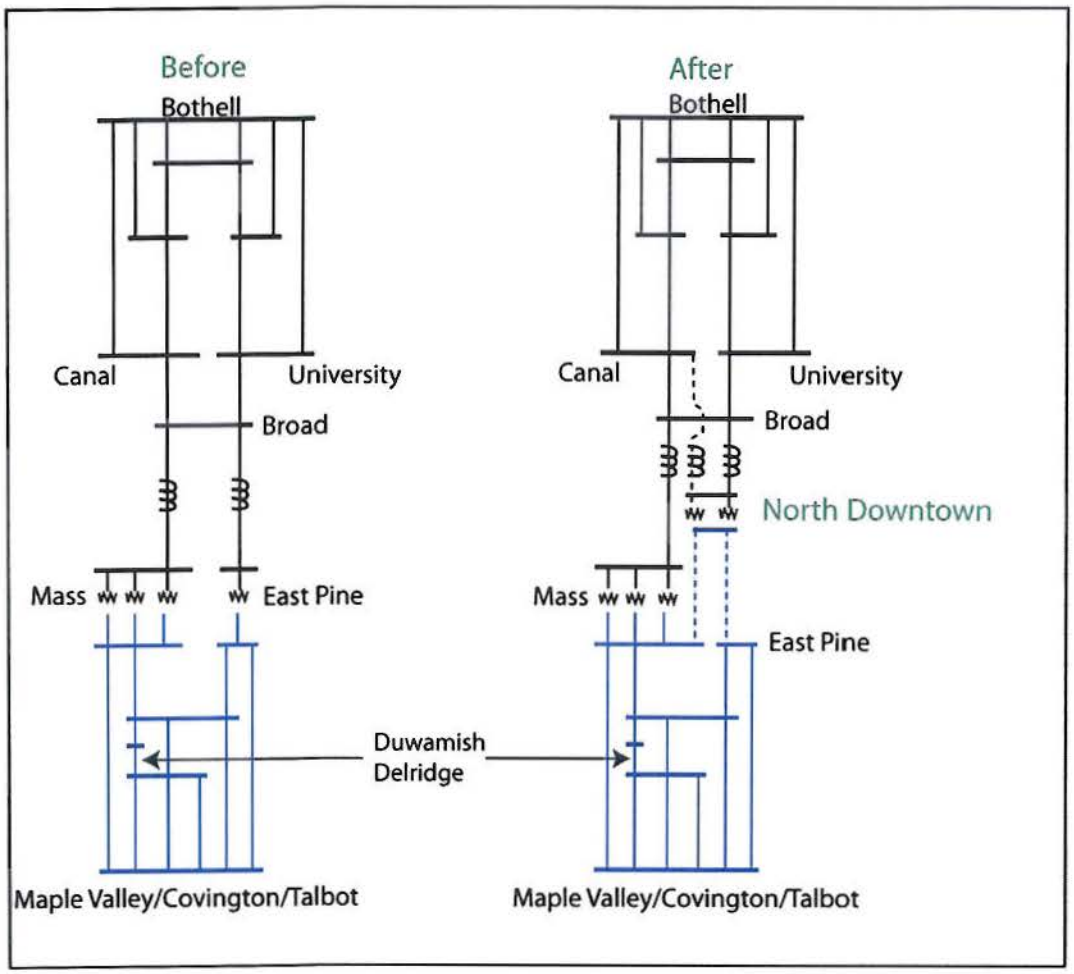

Figure One: One-Line Diagram with the proposed locations of the series inductor additions, before and after the Seattle City Light North Downtown Substation Project.

4) ***Seattle area line rating increases*** – Several key transmission lines in the region have been rerated to a higher capability. In some cases the new ratings provide a 77% increase over the ratings that were utilized in the original study. This has enabled the study team to reduce the size of the series inductors (from 26 ohms to 6 ohms) that were proposed for the Seattle City Light 115 kV transmission lines and cables. The smaller inductors lead to more power flowing through the Seattle City Light system resulting in the need to include an additional facility reconductor in the plan; the Duwamish-Delridge 230 kV line. The cost of this additional reconductor is estimated to be relatively low ($1.6 million). This additional cost is projected to be partially offset by the savings achieved by the installation of smaller inductors. The smaller inductors also reduce the need to add shunt capacitors to offset the reactive losses from the larger sized inductors.

5) ***Seattle City Light Update to TPS Settings*** - Seattle City Light has recently updated the TPS settings which have resulted in operational changes that preclude it from being used as a project in this study to reduce TCRM and increase TTC levels on the northern intertie. All results that use the previous scheme have not been included in this report.

As a result of the above changes, the plan to support south-to-north transfers has been revised as specified in this report. Additional transmission facilities, such as a second Portal Way 230/115 kV transformer, will likely be necessary to support north-to-south transfers. These additional facilities will be further analyzed in subsequent studies.

Overview of Revised Plan

As a result of the above changes, the Transmission Expansion Plan for the Puget Sound Area was revised and the new plan is shown in the following Figure Two:

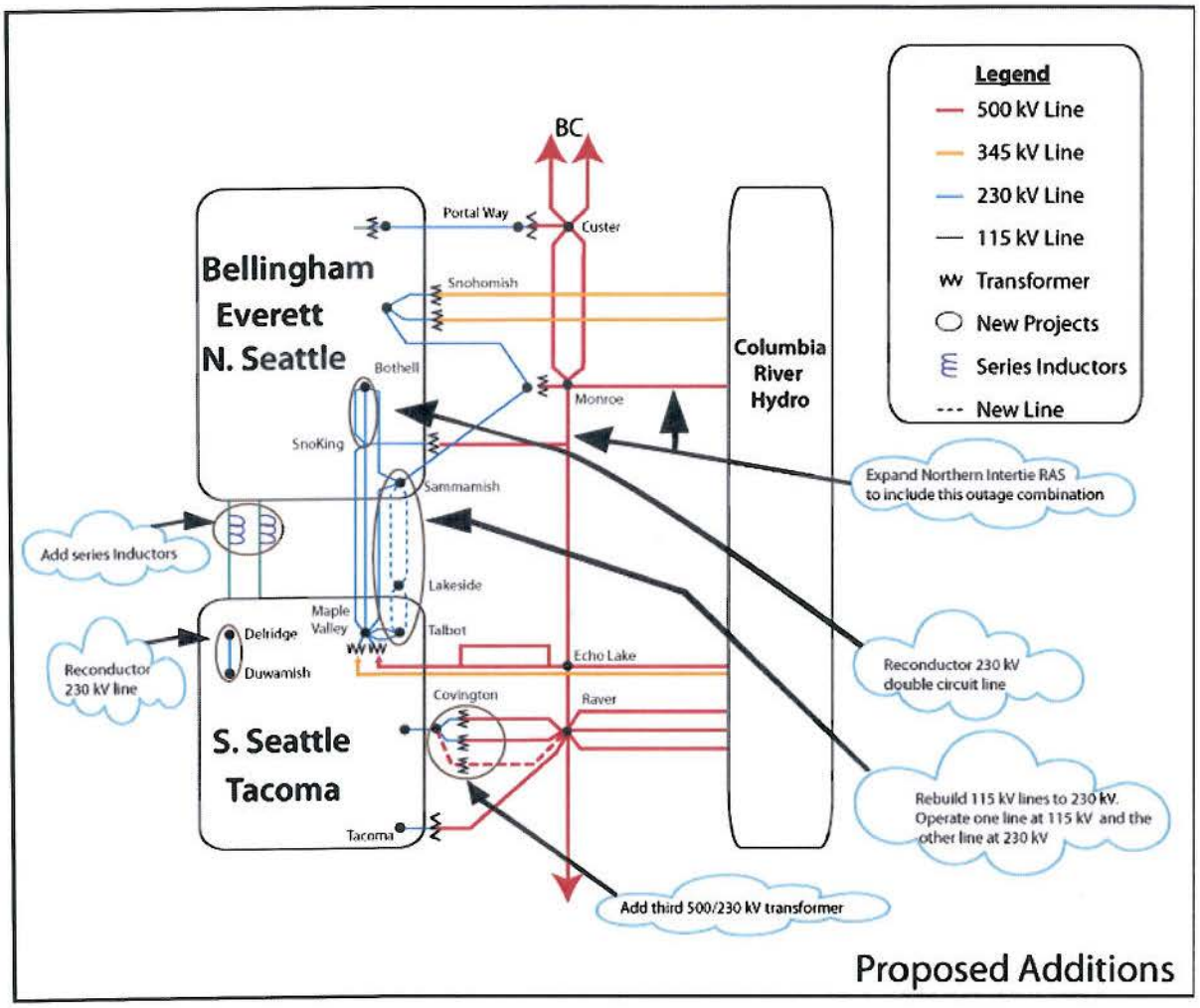

Figure Two: Revised Puget Sound Area Transmission Expansion Plan for Supporting South-to-North Transfers

Projects included in the Puget Sound Area Transmission Expansion Plan to support south-to-north transfers are:

- Reconductor the double circuit Bothell-SnoKing 230 kV lines with high temperature conductor
- Expand the Northern Intertie RAS
- Add a third Covington 500/230 kV transformer
- Reconductor the Delridge-Duwamish 230 kV line
- Add series inductors to the Massachusetts-Union-Broad and East Pine-Broad 115 kV lines in the downtown Seattle system. The final inductor size is under study and may vary from the 6 ohms specified in this report. Each line may have a different inductor size to optimize the system.
- Rebuild both the Sammamish-Lakeside-Talbot 115 kV lines to 230 kV. Energize one line at 230 kV and the other at 115 kV.

The cost estimates for the project in the preferred plan are shown in the following table. It should be noted that portions of the projects may be planned for local utility service and may not be necessary to accomplish the transfer capability goals of this study.

PSAST Preferred South-to-North Plan Cost Estimate	
	Cost Estimate (M)
Reconductor Bothell-SnoKing 230kV #1 & #2 with high temperature conductor	$3
Extend the Northern Intertie RAS to trip for the combined outage of the Chief Joseph-Monroe and Monroe-SnoKing-Echo Lake 500 kV lines	$3
Add a third Covington 500/230 kV transformer, a 500 kV terminal at Raver for the third Raver-Covington 500 kV line, and a 500 kV Bus at Covington	$60
Reconductor Delridge - Duwamish 230 kV Line with high temperature conductor	$2
6 ohm inductors on the two 115 kV cables out of SCL's Broad Street Substation	$13
Lakeside 230/115 kV transformer, rebuild both 115 kV Sammamish – Talbot lines to 230 kV energizing one line at 230 kV	$65
Total Preferred Projects	$146

* The majority of these estimates are preliminary estimates. More detailed estimates will be developed by the Puget Sound Area utilities.

Next Steps

Now that the overall south-to-north plan is complete, the individual transmission owners need to identify the parties responsible for each of the projects and agree on the cost allocation for the projects. After this has been completed, detailed feasibility studies, cost estimates, project timing, and schedules will be completed. In addition, the following project specific studies will be completed by the Puget Sound Area Study Team:

- North-to-South transfer conditions will be studied to determine the effect that the new preferred plan has on transfer capability and to determine if any additional projects are needed.
- Series Inductor Project: Studies need to be completed to determine the proper size for the series inductors, the impact on north-to-south transfers, and the preferred switching arrangement.
- Determine how long the proposed plan will last. The PSAST will grow the Northwest loads in the current 2020 base case to 2025 and 2030 load levels. The additional load will be served by eastern resources. TCRM and TTC values will be calculated to determine whether they may degrade over time.
- Northern Intertie RAS Expansion Project: The Puget Sound Area Study Team will be available to assist BPA and BC Hydro with any additional studies necessary to implement this RAS expansion.
- Covington Transformer Project: Additional studies will be completed by BPA, to further analyze alternative locations for this transformer addition, the need for a 500 kV switchyard at Covington, potential operational solutions, potential remedial action schemes, the size of the transformer, the impedance of the transformer, and the preferred connection to the 230 kV bus. The BPA studies will be coordinated with area utilities through the Puget Sound Area Study Team.

While the projects identified in this report improve the transfer capability through the Puget Sound Area, there remain curtailment risks for firm transfers during outage conditions (N-1-X). Consequently, the Puget Sound Area Study Team will continue to investigate cost effective ways to reduce the risk of firm curtailments.

Study Results

New winter south-to-north studies were completed for a variety of scenarios and the detailed study results are provided in Appendix A. The system performance for each scenario was compared using the following two measures in addition to cost and permitting feasibility:

1) ***Transmission Curtailment Risk Measure (TCRM):*** TCRM is a measure of the likelihood of experiencing curtailments of transfers between the Northwest and British Columbia. The higher the TCRM value the greater the exposure to curtailments. The TCRM analysis

includes the cases with all facilities in service as well as with any single facility out of service. A detailed description of the TCRM methodology is provided in the original report. In the original report, winter and summer conditions for both north-to-south and south-to-north transfers were studied. For this update, only winter conditions with south-to-north transfers were studied as that is the critical system state for the alternatives presented in this report.

2) ***Total Transfer Capability (TTC):*** The TTC (thermal only) of the Westside Northern Intertie (WSNI) was calculated for each of the options in the traditional way, with all lines in service. Only the winter south-to-north condition was studied, with 680 MW of generation operating in the Puget Sound Area. The specific generation unit assumptions are as described in Appendix J of the original report. Puget Sound Area generation during winter peak is between 950 MW and 1550 MW 80% of the time (when load has been greater than 6000MW along with temperature below 32 degrees F). With higher levels of Puget Sound Area generation, the TTC numbers shown in the tables would likely increase.

The major issues addressed in this study are the impacts of the various alternatives on the 115 kV system in the Seattle area, and the impacts of the various alternatives on the 230 kV system between the Maple Valley and SnoKing areas. In all cases, the other major projects as described in the original report are modeled, which include the Northern Intertie RAS expansion, third Covington transformer, and second Portal Way transformer. In addition, the Bothell-SnoKing rebuild project was included in most scenarios although sensitivity studies were conducted for the reconductor option which ended up being the preferred option. Provided below is a discussion of each of the major issues addressed by the study team and their conclusions.

1) 26 ohm versus 6 ohm series inductors

Table 1: Selected TCRM and TTC Results, 26 ohm inductors vs. 6 ohm inductors

Study #	Series Inductors on SCL's 115 kV Cables- 26 ohms	Series Inductors on SCL's 115 kV Cables- 6 ohms	Maple Valley-SnoKing High Temp	PSE's Sammamish - Lakeside - Talbot 115kV to 230kV Upgrade Project (Two Lines Operated at 230 kV)	Total TCRM - Without TCRM Lines Outside of the Puget Sound Area	Winter South North WSNI Thermal TTC at 680 MW Puget Sound Generation
3	X		X		10,304	2,270
4		X	X		8,433	2,297
17	X			X	10,460	1,773
18		X		X	8,666	2,038

With the changes in 115 kV line ratings, the Seattle 115 kV system is capable of accommodating greater flows. As a result, using a series inductor impedance greater than 6 ohms is no longer necessary to reduce the loadings on the Seattle 115 kV system. In fact, the TCRM is slightly better (lower) with the smaller 6 ohm inductors. Prior studies have also indicated that the smaller inductor size provided better results for summer north-to-south conditions. Higher impedance inductors also would have the undesirable effect of pushing more power over to the Maple Valley-SnoKing lines and reducing the TTC. In addition the smaller inductors require the addition of fewer shunt capacitors to offset the reactive losses from the inductors. The 6 ohm inductors have the effect of adding a circuit reactance that is equivalent to 8 miles of overhead 115 kV line. The 6 ohm inductors are now the preferred 115 kV project due to better performance and lower cost.

2) 6 ohm series inductors versus phase shifting transformers

Table 2: 6 ohm series inductors versus phase shifting transformers

Study #	SCL Phase Shifting Transformer	Series Inductors on SCL's 115 kV Cables- 6 ohms	Maple Valley-SnoKing High Temp	PSE's Sammamish - Lakeside - Talbot 115kV to 230kV Upgrade Project (Two Lines Operated at 230 kV)	Total TCRM - Without TCRM Lines Outside of the Puget Sound Area	Winter South North WSNI Thermal TTC at 680 MW Puget Sound Generation
1	X		X		13,122	2,455
4		X	X		8,433	2,297
15	X			X	11,500	2,136
18		X		X	8,666	2,038

The TCRM studies for the phase shifting transformer project may not reflect the true performance of this project due to the difficulty of accurately modeling the phase shifting transformer operating strategy. As a result, while the TCRM studies show poorer performance for the phase shifting transformers than for the series inductor project, the study team believes that this result is a shortcoming of the phase shifter modeling and, in fact, the phase shifters should perform as well or better than the series inductors. This was the conclusion of the TTC studies, where a benefit was observed when using the phase shifting transformers instead of fixed series inductors. However, as the incremental benefits are not believed to be sufficient to justify the higher capital and maintenance costs of the phase shifter option, the 6 ohm series inductors remain the recommended project.

3) 6 ohm series inductors versus adding a third 115 kV cable

Table 3: 6 ohm inductor versus adding a third 115 kV cable

Study #	Series Inductors on SCL's 115 kV Cables- 6 ohms	3rd 115 kV Underground Cable from Mass to Broad Street & Mass Bank 1 Energized	Maple Valley-SnoKing High Temp	PSE's Sammamish - Lakeside - Talbot 115kV to 230kV Upgrade Project (Two Lines Operated at 230 kV)	Total TCRM - Without TCRM Lines Outside of the Puget Sound Area	Winter South North WSNI Thermal TTC at 680 MW Puget Sound Generation
4	X		X		8,433	2,297
5		X	X		19,027	1,513
18	X			X	8,666	2,038
19		X		X	11,213	2,297

This option examines adding a third Seattle City Light 115 kV underground cable (a second cable from Broad Street to Massachusetts) in place of the 6 ohm inductors. The results for this alternative vary depending on whether the Sammamish-Lakeside-Talbot lines are upgraded to 230 kV or the Maple Valley-SnoKing lines are reconductored. With the preferred plan (upgrading the Sammamish-Lakeside-Talbot lines to 230 kV), there is a benefit to the alternative of adding a third cable from a TTC perspective and a slight benefit to the series inductor option from the TCRM perspective. Conversely, if the Maple Valley-SnoKing reconductor project moves forward, the series inductor option performs better from both a TCRM and TTC perspective. This is because if a third cable is added, there is still a need for the series inductors to eliminate overloading on the Broad Street-East Pine 115 kV cable, the East Pine-Maple Valley 230 kV line, and the Massachusetts 230/115 kV transformers. The third cable option is deemed to be less preferable to the recommended option primarily because the cost of the third cable is expected to far exceed the cost of the series inductors. In addition, the construction of an additional Broad-Massachusetts 115 kV cable is incompatible with Seattle City Light's future plan to add a new 230 kV cable as part of their North Downtown Substation

Project (North Downtown-Massachusetts 230 kV). The 6 ohm series inductors remain the preferred project due to better performance and lower cost.

4) ***6 Ohm Series inductors versus replacing cables***

Table 4: 6 ohm inductors versus replacing cables

Study #	Series Inductors on SCL's 115 kV Cables- 6 ohms	Replace SCL's Existing 115 kV Cables (no inductors)	Maple Valley-SnoKing High Temp	PSE's Sammamish - Lakeside - Talbot 115kV to 230kV Upgrade Project (Two Lines Operated at 230 kV)	Total TCRM - Without TCRM Lines Outside of the Puget Sound Area	Winter South North WSNI Thermal TTC at 680 MW Puget Sound Generation
4	X		X		8,433	2,297
6		X	X		19,398	1,602
18	X			X	8,666	2,038
20		X		X	11,746	2,210

If the 6 ohm inductors are in place, potential overloading on the cables is no longer an issue so rebuilding the cables would have no benefit. This option examines rebuilding the cables in lieu of the 6 ohm inductors. The results for this alternative vary depending on whether the Sammamish-Lakeside-Talbot lines are upgraded to 230 kV or the Maple Valley-SnoKing lines are reconductored. With the preferred plan (upgrading the Sammamish-Lakeside-Talbot lines to 230 kV), the series inductors perform better from a TCRM perspective and slightly worse from a TTC perspective. If the Maple Valley-SnoKing reconductor project moves forward then the series inductor option performs better from both a TCRM and TTC perspective. The TCRM performance is better for the series inductor options because if the cables are replaced, there would be other limits reached on the downtown Seattle system. The additional limits reached that account for most of the TCRM increase include the East Pine 230/115 kV transformer and the Massachusetts 230/115 kV transformers. The series inductors remain the preferred project due to better performance and lower cost.

5) 6 ohm *series inductors versus the Seattle City Light North Downtown Substation project with and without series inductors*

Table 5: 6 ohm inductors versus the Seattle City Light North Downtown Substation project with and without series inductors

Study #	Series Inductors on SCL's 115 kV Cables- 6 ohms	SCL's North Downtown Substation	SCL's North Downtown Substation (6 ohm inductors)	Maple Valley-SnoKing High Temp	PSE's Sammamish - Lakeside - Talbot 115kV to 230kV Upgrade Project (Two Lines Operated at 230 kV)	Total TCRM - Without TCRM Lines Outside of the Puget Sound Area	Winter South North WSNI Thermal TTC at 680 MW Puget Sound Generation
4	X			X		8,433	2,297
32		X		X		117,049	-1,380
36			X	X		8,778	2,672
18	X				X	8,666	2,038
34		X			X	38,594	-832
38			X		X	9,101	2,207

The study results indicate that the TCRM would increase dramatically and the TTC would be negative (not capable of south-to-north transfers) unless the series inductors are included in the plans for the new North Downtown Substation. The majority of this increase is due to overloading on the Broad-North Downtown 115 kV cable. As a result, the series inductors are needed before and after the addition of the North Downtown Substation Project.

6) **6 ohm series inductors:** ***Reinforcing Maple Valley–SnoKing 230 kV lines versus options to upgrade Sammamish-Lakeside-Talbot 115 kV lines versus Monroe-Echo Lake #2***

Table 6: 6 ohm inductors – Reinforcing Maple Valley–SnoKing 230 kV lines versus options to upgrade Sammamish-Lakeside-Talbot 115 kV lines versus Monroe-Echo Lake #2

Study #	Series Inductors on SCL's 115 kV Cables- 6 ohms	Maple Valley-SnoKing High Temp	Maple Valley-SnoKing Rebuild	PSE's Sammamish - Lakeside - Talbot 115kV to 230kV Upgrade Project (Two Lines Operated at 230 kV)	PSE's Sammamish - Lakeside - Talbot 115kV to 230kV Upgrade Project (One Line Operated at 230 kV)	Monroe-Echo Lake #2 500kV	Total TCRM - Without TCRM Lines Outside of the Puget Sound Area	Winter South North WSNI Thermal TTC at 680 MW Puget Sound Generation
4	X	X					8,433	2,297
11	X		X				7,623	2,632
18	X			X			8,666	2,038
28	X	X		X			9,003	2,700
81	X				X		13,422	1,643
80	X					X	5,047	2,875

The lowest TCRM and the highest TTC for line improvements east of Lake Washington can be achieved by building the Monroe-Echo Lake #2 500 kV line in addition to the 6 ohm series inductors. Unfortunately, this is also the highest cost transmission option.

From a TCRM perspective there is little difference between the Maple Valley – SnoKing reinforcement options and the Sammamish – Lakeside – Talbot upgrade project with two lines operated at 230 kV although the Maple Valley-SnoKing rebuild option performs slightly better than the others. From a TTC perspective, there is an advantage for the Maple Valley-SnoKing options; particularly the rebuild option. However, this was not deemed to be a sufficient advantage over the preferred Sammamish-Lakeside-Talbot 230 kV upgrade project with two lines operated at 230 kV. A major benefit of the Sammamish-Lakeside-Talbot options is that

they would provide necessary load service to Lakeside Substation which the Maple Valley-SnoKing options would not. Pursuing the Sammamish-Lakeside-Talbot options at this time does not preclude reconductoring the Maple Valley-SnoKing lines at a later time.

The Sammamish – Lakeside – Talbot upgrade project can defer some of its substation construction costs by initially upgrading the 115 kV lines to 230 kV and operating one line at 115 kV and one line at 230 kV. This option did not perform as well as operating both lines at 230 kV for both TCRM and TTC. The reduction in performance has been deemed acceptable for the cost savings. The second line planned to be cut-over to 230 kV operation at a later date.

7) **6 ohm series inductors and Sammamish-Lakeside-Talbot upgrade:** ***Bothell-SnoKing rebuild versus reconductor***

Table 7: 6 ohm series inductors and Sammamish-Lakeside-Talbot upgrade: Bothell-SnoKing rebuild versus reconductor

Study #	Series Inductors on SCL's 115 kV Cables- 6 ohms	PSE's Sammamish - Lakeside - Talbot 115kV to 230kV Upgrade Project (Two Lines Operated at 230 kV)	PSE's Sammamish - Lakeside - Talbot 115kV to 230kV Upgrade Project (One Line Operated at 230 kV)	Bothell - SnoKing Rebuild	Bothell - SnoKing High Temp Instead of Rebuild	Total TCRM - Without TCRM Lines Outside of the Puget Sound Area	Winter South North WSNI Thermal TTC at 680 MW Puget Sound Generation
18	X	X		X		8,666	2,038
47	X	X			X	9,512	2,086
81	X		X	X		13,422	1,643
82	X		X		X	13,663	1,677

For either Sammamish – Lakeside – Talbot upgrade option the TCRM and TTC results are similar for the Bothell-SnoKing rebuild and reconductoring options. The reconductor of the Bothell-SnoKing lines would provide acceptable performance at a lower cost with minimal permitting and mitigation requirements.

Appendix A

Table of TCRM and TTC Results

ColumbiaGrid PSAST Options for N-1-X TCRM Determination

	115 kV Reinforcement Options									230 kV & 500 kV Reinforcement Options							TCRM & TTC Values		
Study #	SCL Phase Shifting Transformer	Series Inductors on SCL's 115 kV Cables- 26 ohms	Series Inductors on SCL's 115 kV Cables- 6 ohms	3rd 115 kV Underground Cable from Mass to Broad Street & Mass Bank 1 Energized	Replace SCL's Existing 115 kV Cables (no inductors)	Replace SCL's Existing 115 kV Cables (6 ohm inductors)	SCL's North Downtown Substation	SCL's North Downtown Substation (6 ohm inductors)	Maple Valley-SnoKing High Temp	Maple Valley-SnoKing Rebuild	PSE's Sammamish - Lakeside - Talbot 115kV to 230kV Upgrade Project (Two Lines Operated at 230 kV)	PSE's Sammamish - Lakeside - Talbot 115kV to 230kV Upgrade Project (One Line Operated at 230 kV)	Monroe-Echo Lake #2 500kV	Bothell - SnoKing High Temp Instead of Rebuild	With Covington, Portalway, Extended RAS, Bothell - SnoKing Upgrade	Total TCRM - Without TCRM Lines Outside of the Puget Sound Area	TTC (Thermal Only)	Notes
54																308,343	-	PSAST 2020 Winter South-to-North Expansion Plan Base Case
24															X	73,898	920	
1	X								X						X	13,122	2455	
3		X							X						X	10,304	2270	
4			X						X						X	8,433	2297	
5				X					X						X	19,027	1513	
6					X				X						X	19,398	1602	
7						X			X						X	8,258	2448	
32							X		X						X	117,049	-1380	
36								X	X						X	8,778	2672	
8	X									X					X	14,039	2692	
10		X								X					X	12,659	2652	
11			X							X					X	7,623	2632	
12				X						X					X	13,172	1820	
13					X					X					X	13,012	2120	
14						X				X					X	7,423	2664	
33							X			X					X	82,697	-1350	
37								X		X					X	7,111	2708	
15	X										X				X	11,500	2136	
17		X									X				X	10,460	1773	
18			X								X				X	8,666	2038	
81			X									X			X	13,422	1643	
47			X								X			X	X	9,512	2086	
82			X									X		X	X	13,663	1677	Preferred Plan
19				X							X				X	11,213	2297	
20					X						X				X	11,746	2210	
21						X					X				X	8,666	2044	
34							X				X				X	38,594	-832	
38								X			X				X	9,101	2207	
49								X			X			X	X	10,286	2233	
25	X								X		X				X	9,664	2745	
27		X							X		X				X	9,288	2497	
28			X						X		X				X	9,003	2700	
29				X					X		X				X	11,460	2305	
30					X				X		X				X	12,395	2377	
31						X			X		X				X	9,003	2700	
35							X		X		X				X	38,463	-804	
39								X	X		X				X	9,296	2732	
56								X	X		X			X	X	10,285	2753	
22													X		X	13,501	2104	
40							X						X		X	46,466	-292	
41								X					X		X	4,143	2916	
80			X										X		X	5,047	2875	

EXHIBIT B
NOTICES

Any notice required under this MOA shall be in writing and shall be delivered in person; or with proof of receipt by a nationally recognized delivery service or by United States Certified Mail. Notices are effective when received. Either Party may change the name or address for receipt of notice by providing notice of such change. The Parties shall deliver notices to the following person and address:

If to Seattle City Light:

Attention:
Phone:
Fax:
Email:

If by First Class Mail:

City of Seattle, City Light Department
(Customer Address)
(Customer City, State, Zip)

If by Overnight Delivery Service:
City of Seattle, City Light Department
(Customer Address)
(Customer City, State, Zip)

If to BPA:

Attention:
Phone:
Fax:
Email:

If by First Class Mail:

Bonneville Power Administration
P.O. Box 61409
Vancouver, WA 98666-1409

If by Overnight Delivery Service:
Bonneville Power Administration – TSE/TPP-2
7500 NE 41st Street – Suite 130
Vancouver, WA 98662

If to the Puget:

Attention:
Phone:
Fax:
Email:

If by First Class Mail:

Puget Sound Energy, Inc.
P.O. Box 97034
Bellevue, WA 98009-9734

If by Overnight Delivery Service:
Puget Sound Energy, Inc.
10885 N.E. 4th Street, Suite 1100
Bellevue, WA 98004-5591

Department of Energy

Bonneville Power Administration
P.O. Box 61409
Vancouver, WA 98666-1409

TRANSMISSION SERVICES

July 3, 2014

In reply refer to: TSE/TPP-2

Contract No. 14TX - zzzzz
Letter Agreement

Ms. Booga Gilbertson
~~Senior Supervisor, T&D System Planning~~
Puget Sound Energy, Inc.

Bellevue, WA 98vvv

Mr. Phillip West

City of Seattle, City Light Department

Seattle, WA 98xxx

Dear Ms. Gilbertson and Mr. West:

The Bonneville Power Administration (BPA), the City of Seattle, City Light Department (SCL) and Puget Sound Energy, Inc. (PSE) are parties to the Memorandum of Agreement (MOA), Contract No. 11TX-15450, relating to the Preferred Puget Sound Area Plan of Service Projects and Cost Allocation. The parties to the MOA are currently in the initial stages of development of the projects described in the MOA. As this has progressed certain aspects of the MOA were identified that the parties believe need to be clarified.

This Letter Agreement is to meet the requirement in Section 7, Payment Schedule, of the MOA, which states that "The Parties shall agree in writing to the method and schedule for the cost share contributions to be made under this MOA."

BPA, Puget and Seattle agree that waiting until the completion of a project before exchanging funds (as specified in Section 7) is not the preferred course of action, given the potential for multiple years delay for completion of a project. An alternative arrangement is described below.

The following Financial Terms and Conditions shall apply to all cost sharing obligations incurred under the MOA:

FINANCIAL TERMS AND CONDITIONS STATEMENT

Each Party's cost obligation for performance of the duties associated with construction of each Preferred Plan Project shall be as specified in Sections 4 and 5 of the MOA. The cost of performing the duties associated with construction of each Preferred Plan Project shall be the actual cost of doing the work plus an overhead rate of xx% for labor and yy% for materials~~-~~,

Comment [TLT1]: Specify separate overheads for each Party?

DRAFT

representing the indirect costs of the project office plus the contractual support costs of contract negotiation, billing and accounting functions, and contract management.

Payments made to BPA shall be held in an account established for this Agreement. If BPA needs additional funds to complete the work at any time during performance of the project, BPA may request, in writing, for PSE to advance such additional funds to BPA for deposit in the account. PSE shall advance such additional funds within 30 days of BPA's written request, and BPA may temporarily stop work until PSE supplies the requested funds. If PSE does not advance such additional funds by the due date or, if at any time before completion of the project PSE elects to stop work under this Agreement, BPA will cease all work and restore, as a cost to the project at PSE's expense, government facilities and/or records (1) to their condition prior to the beginning of work under this Agreement, or (2) to some other mutually agreeable condition.

Within a reasonable time after completion of the project BPA shall make a full accounting to PSE showing the actual costs charged against the account. BPA shall either remit any unexpended balance in the account to PSE or bill for any costs in excess of the deposits in the account. PSE shall pay any excess costs within 30 days of the billing.

Payments not received within 30 days of the invoice date will accrue interest on the amount due from the invoice date to the date paid, at an annual interest rate equal to the higher of i) the prime rate (as reported in the Wall Street Journal in the first issue published during the month in which payment by PSE is due) plus 4 percent; or ii) such prime rate multiplied by 1.5.

- Language if cost is exceeding estimate in MOA –
- Periodic (every six months?) update on status of project and where it stands with respect to estimated cost
- Provisions for each party to invoice the others
- And???

Formatted: Bulleted + Level: 1 + Aligned at: 0.04" + Indent at: 0 29"

Formatted: Bulleted + Level: 1 + Aligned at: 0.04" + Indent at: 0 29"

Formatted: List Paragraph, No bullets or numbering

Formatted: Bulleted + Level: 1 + Aligned at: 0.04" + Indent at: 0 29"

Formatted: List Paragraph, No bullets or numbering

Formatted: Bulleted + Level: 1 + Aligned at: 0.04" + Indent at: 0 29"

DRAFT

Please sign all three originals of this Agreement where indicated, returning two originals to BPA one of the addresses listed belowat one of the following addresses. The remaining original is for your records. BPA will ensure that Puget and SCL have a full set of original signature pages.

In order to meet the project schedule, the executed Agreement must be received by cClose of bBusiness (COB) August 1, 2014. If BPA does not receive the executed Agreement by COB August 1, 2014, this offer Letter Agreement will be considered withdrawn.

First Class Mail Overnight Delivery Service
Bonneville Power Administration Bonneville Power Administration
Mail Stop: TSE/TPP-2 Mail Stop: TSE/TPP-2
P.O. Box 61409 7500 NE 41st Street – Suite 130
Vancouver, WA 98666-1409Vancouver, WA 98662

If you have any questions, please call me at (360) 619-6015.

Sincerely,

Toni L. Timberman
Senior Transmission Account Executive
Transmission Sales

CONCUR:

PUGET SOUND ENERGY, INC.

By: _____

Name: _____
(Print/Type)

Title: _____

Date: _____

CITY OF SEATTLE,
CITY LIGHT DEPARTMENT

By: _____

Name: _____
(Print/Type)

Title: _____

DRAFT

Date: _____

DRAFT

bcc:
R. Shier – FRG-2
P. Walters – FRG-2
B. Bennett – LT-7
C. Hamel – TEP/TPP-1
S. Kannan – TFB/DOB-1
J. Jusupovic – TPC/TPP-4
D. Sauer – TPCC/TPP-4
T. Van Cleave – TPCC/TPP-4
J. Brank – TPCV/OLYMPIA
P. Fiedler – TPCV/TPP-4
T. Timberman – TSE/TPP-2
P. Gibson – TSES/TPP-2
Customer File – TPC/TPP-4 (ED-21-11/Tacoma Power)
Customer File – TSE/TPP-2 (TM-11/Tacoma Power)
PWA File – TPC/TPP-4 (N0310/Latest Status)
Official File – CCM_Support (Agreement 14TP-10657)

DRAFT

From: Jusupovic,Jana D (BPA) - TPC-TPP-4
To: Timberman,Toni L (BPA) - TSE-TPP-2
Subject: RE: Letter Agreements for PSANI MOA
Date: Wednesday, August 13, 2014 1:36:38 PM

Hi Toni,

Just letting you know I'm meeting with Dena and Tonya internally on Friday (8/15) regarding the FTC language on 16062.

We hope to provide you better feedback after that.

-----Original Message-----
From: Timberman,Toni L (BPA) - TSE-TPP-2
Sent: Tuesday, August 12, 2014 4:09 PM
To: Adams,Hub V (BPA) - LN-7; Moffett,Justin T (BPA) - KEC-4; Marleau,Michael L (BPA) - TEP-TPP-1; Jusupovic,Jana D (BPA) - TPC-TPP-4; Van Cleave,Tonya M (BPA) - TPCC-TPP-4; Fiedler,Paul A (BPA) - TPCV-TPP-4; Chan,Allen C (BPA) - LT-7
Cc: Gibson,Paula L (BPA) - TSES-TPP-2; Bennett,Barry (BPA) - LT-7
Subject: Letter Agreements for PSANI MOA

Attached are the latest drafts of the letter agreements to clarify the PSANI MOA. Note that Jana is still working on 16062 to clarify how $$ will change hands, so that one is still very draft.

Please let me know if you have comments on the other three. I am still working on scheduling a meeting with Hardev to get his approval to proceed with these agreements.

I have attached the PSANI MOA for your convenience.

Thanks,
Toni

From: Timberman,Toni L (BPA) - TSE-TPP-2
To: Moffett,Justin T (BPA) - KEC-4
Subject: RE: Letter Agreements for PSANI MOA
Date: Wednesday, August 13, 2014 9:17:00 AM

Will do... thanks for the speedy response!

-----Original Message-----
From: Moffett,Justin T (BPA) - KEC-4
Sent: Wednesday, August 13, 2014 8:16 AM
To: Timberman,Toni L (BPA) - TSE-TPP-2
Subject: RE: Letter Agreements for PSANI MOA

HI Toni,
The letters look good to me. Would you mind adding me to the bcc list so I have a complete copy of the MOA w/ all letter agreements?
Thanks.

Justin T. Moffett, PWS
Environmental Protection Specialist | KEC-4
BONNEVILLE POWER ADMINISTRATION
bpa.gov | P 503-230-3233 | C 503-758-2088

-----Original Message-----
From: Timberman,Toni L (BPA) - TSE-TPP-2
Sent: Tuesday, August 12, 2014 4:09 PM
To: Adams,Hub V (BPA) - LN-7; Moffett,Justin T (BPA) - KEC-4; Marleau,Michael L (BPA) - TEP-TPP-1; Jusupovic,Jana D (BPA) - TPC-TPP-4; Van Cleave,Tonya M (BPA) - TPCC-TPP-4; Fiedler,Paul A (BPA) - TPCV-TPP-4; Chan,Allen C (BPA) - LT-7
Cc: Gibson,Paula L (BPA) - TSES-TPP-2; Bennett,Barry (BPA) - LT-7
Subject: Letter Agreements for PSANI MOA

Attached are the latest drafts of the letter agreements to clarify the PSANI MOA. Note that Jana is still working on 16062 to clarify how $$ will change hands, so that one is still very draft.

Please let me know if you have comments on the other three. I am still working on scheduling a meeting with Hardev to get his approval to proceed with these agreements.

I have attached the PSANI MOA for your convenience.

Thanks,
Toni

From:	Van Cleave,Tonya M (BPA) - TPCC-TPP-4
To:	Timberman,Toni L (BPA) - TSE-TPP-2
Cc:	Gibson,Paula L (BPA) - TSES-TPP-2; Chan,Allen C (BPA) - LT-7; Jusupovic,Jana D (BPA) - TPC-TPP-4
Subject:	FW: Letter Agreements for PSANI MOA
Date:	Thursday, August 14, 2014 11:31:39 AM
Attachments:	11TX-15450_CT_PDF.pdf 16053 PSANI MOA SCOPE CHANGE LTR AGMT.doc 16054 PSANI MOA USE OF FUNDS LTR AGMT.doc 16060 PSANI MOA NEPA LTR AGMT 8_8 TT.doc 16062 PSANI MOA Financial Terms and Conditions.doc

---

Toni, here are my suggested changes. It looks like Dena/Jana will be in touch with you regarding the Financial document, so I didn't make too many changes to that one.

-----Original Message-----
From: Timberman,Toni L (BPA) - TSE-TPP-2
Sent: Tuesday, August 12, 2014 4:09 PM
To: Adams,Hub V (BPA) - LN-7; Moffett,Justin T (BPA) - KEC-4; Marleau,Michael L (BPA) - TEP-TPP-1; Jusupovic,Jana D (BPA) - TPC-TPP-4; Van Cleave,Tonya M (BPA) - TPCC-TPP-4; Fiedler,Paul A (BPA) - TPCV-TPP-4; Chan,Allen C (BPA) - LT-7
Cc: Gibson,Paula L (BPA) - TSES-TPP-2; Bennett,Barry (BPA) - LT-7
Subject: Letter Agreements for PSANI MOA

Attached are the latest drafts of the letter agreements to clarify the PSANI MOA. Note that Jana is still working on 16062 to clarify how $$ will change hands, so that one is still very draft.

Please let me know if you have comments on the other three. I am still working on scheduling a meeting with Hardev to get his approval to proceed with these agreements.

I have attached the PSANI MOA for your convenience.

Thanks,
Toni

Contract No. 11TX-15450

MEMORANUDUM OF AGREEMENT

executed by the

UNITED STATES OF AMERICA

DEPARTMENT OF ENERGY

acting by and through the

BONNEVILLE POWER ADMINISTRATION

and

THE CITY OF SEATTLE

acting by and through its

CITY LIGHT DEPARTMENT

and

PUGET SOUND ENERGY, INC.

(Relating to the Preferred Puget Sound Area Plan of Service Projects and Cost Allocation)

This MEMORANDUM OF AGREEMENT (MOA) is executed by the UNITED STATES OF AMERICA, Department of Energy, acting by and through the BONNEVILLE POWER ADMINISTRATION (BPA), THE CITY OF SEATTLE, acting by and through its CITY LIGHT DEPARTMENT (Seattle City Light), and PUGET SOUND ENERGY INC. (Puget). BPA, Seattle City Light, and Puget are sometimes referred to individually as "Party" and collectively as "Parties".

WHEREAS, BPA owns and is responsible for the reliable operation of the Federal Columbia River Transmission System (FCRTS),

WHEREAS, Seattle City Light and Puget each own and operate electric systems that are interconnected with the FCRTS in the Puget Sound Area and electric power is delivered within those electric systems, and to or from them by BPA over the FCRTS,

WHEREAS, the Puget Sound Area experiences periods of transmission congestion that may require mitigation to maintain reliable operation of the Puget Sound Area Interconnection, including in some cases, curtailments of firm transmission service,

WHEREAS, as of February 2011, the Parties entered into Contract No. 11TX-15290, "Temporary Operational Support Program Agreement," that provides for voluntary changes in planned generation, including an increase in Puget Sound Area generation, as temporary and short-term measures for relieving forecasted transmission congestion conditions that are expected to adversely affect the reliable operation of the Puget Sound Area Interconnection,

WHEREAS, representatives from each of the Parties and other entities participated in regional studies to develop a long term plan, and implement a range of physical improvements to preserve the reliable operation of the Puget Sound Area interconnection, and reduce the need to curtail firm transmission service,

WHEREAS, the Parties have identified the projects described herein that, when taken as a whole, are expected to preserve the reliable operation of the Puget Sound Area Interconnection, and reduce the need to curtail firm transmission service; and it is in their individual and collective interests to continue to support the efforts needed to carry out these projects, and

WHEREAS, the transmission congestion affecting the Puget Sound Area interconnection is a shared problem, and the projects and cost sharing arrangements provided herein are appropriate.

NOW THEREFORE, in consideration of the mutual obligations and undertakings herein, the sufficiency of which is acknowledged, the Parties agree as follows:

1. DEFINITIONS

(a) "Bothell to SnoKing Reconductor Project" means the project identified in the Preferred Plan of Service in which Seattle City Light will reconductor the existing Bothell to SnoKing No. 1 and No. 2 230 kV lines with high-temperature conductor.

(b) "BPA Preferred Plan Projects" means, collectively, the Covington 500 kV Transformer Addition Project and the Northern Intertie Remedial Action Scheme ("RAS") Improvement Project.

(c) "Broad Street Inductor Project" means the project identified in the Preferred Plan of Service in which Seattle City Light will add series inductors (up to 10 ohm) to the Massachusetts-Broad Street 115 kV line.

(d) "ColumbiaGrid" means the Washington non-profit membership corporation formed to improve the operational efficiency, reliability, and planned expansion of the Pacific Northwest transmission grid, the

eight members of which, as of the Effective Date, are Avista Corporation; BPA; Public Utility District No. 1 of Chelan County, Washington; Public Utility District No. 2 of Grant County, Washington; Puget; Seattle City Light; Public Utility District No. 1 of Snohomish County, Washington; and Tacoma Power.

(e) "Covington 500 kV Transformer Addition Project" means the project identified in the Preferred Plan of Service in which BPA will install a third 500–230 kV transformer at the BPA Covington Substation.

(f) "Delridge to Duwamish Reconductor Project" means the project identified in the Preferred Plan of Service in which Seattle City Light will reconductor the existing Delridge to Duwamish 230 kV line with high-temperature conductor.

(g) "Lakeside 230 kV Transformer Addition Project" means the project identified in the Preferred Plan of Service in which Puget will install a 230–115 kV transformer at the Puget Lakeside Substation.

(h) "Maple Valley to SnoKing Reconductor Project" means the project identified in the Preferred Plan of Service in which Seattle City Light will reconductor the existing Maple Valley to SnoKing 230 kV line with high-temperature conductor.

(i) "North Downtown Inductor Project" means the project identified in the Preferred Plan of Service in which Seattle City Light will add series inductors (up to 10 ohm) to the East Pine-Broad Street line as part of Seattle City Light's North Downtown Substation Project.

(j) "Northern Intertie RAS Improvement Project" means the project identified in the Preferred Plan of Service in which BPA will install new software for and re-wire electrical protection devices on the Northern Intertie RAS.

(k) "Northern Intertie RAS" means the existing BPA pre-programmed set of automatic operating steps that are designed to protect the regional high voltage electric grid in the event of a loss of one of the two Custer-Monroe 500 kV lines.

(l) "Preferred Plan of Service" means the "Updated Recommended Transmission Expansion Plan for the Puget Sound Area to Support Winter South-to-North Transfers" approved by ColumbiaGrid on October 28, 2011, a copy of which is attached as Exhibit A to this MOA.

(m) "Preferred Plan Projects" means, collectively, the BPA Preferred Plan Projects, the Puget Preferred Plan Projects, and the Seattle City Light Preferred Plan Projects.

(n) "Puget Preferred Plan Projects" means the Sammamish to Lakeside to Talbot Rebuild Project and the Lakeside 230 kV Transformer Addition Project.

(o) "Sammamish to Lakeside to Talbot Rebuild Project" means the project identified in the Preferred Plan of Service in which Puget will upgrade Puget's existing Sammamish to Lakeside to Talbot 115 kV lines to 230 kV operation using Puget's existing Sammamish to Lakeside to Talbot utility corridor.

(p) "Seattle City Light Preferred Plan Projects" means the Bothell to SnoKing Reconductor Project, the Broad Street Inductor Project, the North Downtown Inductor Project, and the Delridge to Duwamish Reconductor Project.

2. TERM

The term of this MOA shall be effective on the date of execution by all Parties (Effective Date) and shall continue until the earliest to occur of the following: (i) the date of completion of the last of the Preferred Plan Projects; (ii) a Party terminates this MOA pursuant to section 5(c) of this MOA; or (iii) December 31, 2020.

3. PREFERRED PLAN OF SERVICE PROJECTED PROJECT COMPLETION SCHEDULE AND COST

(a) **BPA Preferred Plan Projects**. Each Party acknowledges that, as of the Effective Date, the projected project completions schedule and capital costs of the BPA Preferred Plan Projects are as follows:

BPA Preferred Plan Project	Projected Completion	Projected Capital Cost
1. Covington 500 kV Transformer Addition Project	2018	$56.2 million
2. Northern Intertie RAS Improvement Project	2014	$4.0 million

(b) **Puget Preferred Plan Projects.** Each Party acknowledges that, as of the Effective Date, the projected project completions schedule and capital costs of the Puget Preferred Plan Projects are as follows:

Puget Preferred Plan Project	Projected Completion	Projected Capital Cost
1. Sammamish to Lakeside to Talbot Rebuild Project	2017	$45.0 million (single circuit) or $41.3 million (double circuit)
2. Lakeside 230 kV Transformer Addition Project	2017	$22.0 million

(c) **Seattle City Light Preferred Plan Projects.** Each Party acknowledges that, as of the Effective Date, the projected project completions schedule and capital costs of the Seattle City Light Preferred Plan Projects are as follows:

Seattle City Light Preferred Plan Project	Projected Completion	Projected Capital Cost
1. Bothell to SnoKing Reconductor Project	2017	$2.5 million
2. Broad Street Inductor Project	2017	$7.3 million*
3. North Downtown Inductor Project	2017	$4.4 million*
4. Delridge to Duwamish Reconductor Project	2016	$1.9 million

(d) **Preferred Plan Project Not Planned for Construction Based On the Construction of the Puget Preferred Plan Projects.** Each Party acknowledges that, the construction of the Puget Preferred Plan Projects negates the need for the construction of the Maple Valley to

* The projected capital costs of the Broad Street Inductor Project and the North Downtown Inductor Project do not reflect any projected costs for land acquisition. As of the Effective Date, the Parties acknowledge that Seattle City Light may have to acquire land to accomplish the Broad Street Inductor Project, and the actual capital costs of the Broad Street Inductor Project will, if necessary, reflect the actual costs of land acquisition for such project. As of the Effective Date, the Parties do not anticipate that the North Downtown Inductor Project will require Seattle City Light to acquire any land.

SnoKing Reconductor Project. Each Party acknowledges that, as of the Effective Date, the projected project completions schedule and capital costs of the Maple Valley to SnoKing Reconductor Project are as follows:

Preferred Plan Project	Projected Completion	Projected Capital Cost
Maple Valley to SnoKing Reconductor Project	N/A	$16.1 million

4. PRELIMINARY CAPITAL COST ALLOCATION

As of the Effective Date of this MOA, the Parties agree to share in the capital costs of Preferred Plan Projects as follows:

(a) **BPA Preferred Plan Projects**. BPA shall pay the entire actual capital cost of each of (i) the Covington 500 kV Transformer Addition Project and (ii) the Northern Intertie RAS Improvement Project

(b) **Seattle City Light Preferred Plan Projects.** BPA, Puget, and Seattle City Light shall each pay one-third of the total actual capital cost of each of (i) the Bothell to SnoKing Reconductor Project; (ii) the Delridge to Duwamish Reconductor Project; (iii) the Broad Street Inductor Project; and (iv) the North Downtown Inductor Project.

(c) **Puget Preferred Plan Projects.** BPA and Seattle City Light shall each pay to Puget an amount equal to one-third of the adjusted projected capital cost of the Maple Valley to SnoKing Reconductor Project, which adjusted projected capital cost shall be determined as provided in the following table:

Projected Capital Cost of the Maple Valley to SnoKing Reconductor Project	=	$16.1 million * Cost Differences in Reconductor Projects

where:

Cost Differences in Reconductor Projects	=	the quotient of

(i) the sum of the actual capital costs of the Delridge to Duwamish Reconductor Project and Bothell to SnoKing Reconductor Project and

(ii) the sum of the projected capital costs of the Delridge to Duwamish Reconductor Project and Bothell to SnoKing Reconductor Project identified in section 3(c) above (i.e., $4.4 million)

5. FINAL CAPITAL COST ALLOCATION AND OPTION OF ELECTION TO CANCEL

(a) The allocations identified in section 4 are based on preliminary planning capital cost projections. The final capital cost allocation for the Seattle City Light Preferred Plan Projects shall be based on actual design and construction capital costs for each of the Seattle City Light Preferred Plan Projects, and the final capital cost allocation for the Puget Preferred Plan Projects shall be in accordance with the formula proscribed in section 4(a) above. The Parties shall review such actual design and construction capital costs and schedules and shall agree in writing to the final capital cost allocation.

(b) Each Party reserves the right to cancel any Preferred Plan Project for which such Party is the sponsor if such Party determines that

(i) the actual capital cost of such Preferred Plan Project is likely to exceed the projected capital cost of such Preferred Plan Project by a factor that is equal to or in excess of thirty percent (30%), or

(ii) the projected in-service date of the Preferred Plan Project will be more than twenty-four (24) months later than the projected completion date identified in section 3 above for such Preferred Plan Project.

If a Party elects to cancel a Preferred Plan Project for which such Party is a sponsor under this section 5(b), such Party shall provide written notice to such other Parties within five (5) days of such election. Within a reasonable period of time after receipt of such written notice, representatives of the Parties shall convene and identify alternative projects that the Parties expect will preserve the reliable operation of the Puget Sound Area Interconnection and reduce the need to curtail firm transmission service in a manner similar to the project cancelled pursuant to section 5(b). If the Parties cannot agree in good faith upon an alternative project to replace a project cancelled pursuant to section 5(b) within a reasonable period following receipt of written notice of

such termination, then any Party may terminate this MOA upon 90 days' written notice to the other Parties.

6. RESPONSIBILITY FOR ALL OTHER COSTS

(a) Each Party shall be solely responsible for the Preferred Plan Project for which such Party is the sponsor, less the contributions from the other Parties as provided in section 4. This MOA only affects the cost sharing for the Preferred Plan Projects.

(b) Each Party shall own the assets for the Preferred Plan Project for which such Party is the sponsor and shall be solely responsible for the operation and maintenance costs of such assets. Each Party shall be entitled to any capacity increases to its transmission system that results from any assets installed pursuant to this MOA.

(c) If any Party enhances a Preferred Plan Project after completion of such Preferred Plan Project to meet such Party's needs, the cost of such future enhancements shall be borne solely by such Party. Each Party shall attempt in good faith to coordinate with the other Parties with respect to any future enhancements to a Preferred Plan Project to minimize or eliminate any impact to the interconnected electric systems of such other Parties.

7. PAYMENT SCHEDULE

Payments will be made at the completion of individual projects. The Parties shall agree in writing to the method and schedule for the cost share contributions to be made under this MOA.

8. NATIONAL ENVIRONMENTAL POLICY ACT ASSESSMENT

To the extent that BPA's financial contributions under this MOA are determined to trigger the need for analysis of projects under the National Environmental Policy Act, the Parties shall coordinate such assessment.

9. JOINT COMMUNICATIONS

The Parties shall coordinate joint communications regarding presentations of the preferred plan of service to the public.

10. GENERAL PROVISIONS

(a) This MOA, including documents expressly incorporated by reference, constitutes the entire agreement between the Parties. It supersedes all previous communications, representations, or contracts, either written or oral, which purport to describe or embody the subject matter of this MOA.

(b) No amendment of this MOA shall be of any force or effect unless set forth in a written instrument signed by authorized representatives of each Party.

(c) This MOA is made and entered into for the sole benefit of the Parties, and the Parties intend that no other person or entity shall be a direct or indirect beneficiary of this MOA.

(d) This MOA shall be interpreted consistent with and governed by federal law.

(e) In the event that any provision of this MOA is determined to be invalid or unenforceable for any reason, in whole or part, the remaining provisions of this MOA shall be unaffected thereby and shall remain in full force and effect to the fullest extent permitted by law, and such invalid or unenforceable provision shall be replaced by the Parties with a provision that is valid and enforceable and that comes closest to expressing the Parties' intention with respect to such invalid or unenforceable provision.

(f) Each Party shall be solely responsible for and shall pay its own costs and expenses incurred by it in connection with the negotiation of this MOA.

(g) Whenever this MOA requires or provides that (i) a notice be given by a Party to any other Party or (ii) a Party's action requires the approval or consent of any other Party, such notice, consent or approval shall be given in writing and shall be given in accordance with the provisions of Exhibit B to this MOA.

(h) This MOA is binding on any successors and assigns of the Parties. No Party may otherwise transfer or assign this MOA, in whole or in part, without the other Parties' written consent. Such consent shall not be unreasonably withheld.

(i) Nothing contained in this MOA shall be construed as creating a corporation, company, partnership, association, joint venture or other entity, nor shall anything contained in this MOA be construed as

creating or requiring any fiduciary relationship between the Parties. No Party shall be responsible hereunder for the acts or omissions of any other Party. Nothing herein shall preclude (i) a Party from taking any action (or having its affiliates take any action) with respect to any other transmission project, including any such project that may compete with the projects provided herein, or (ii) the Parties jointly from entering into MOAs with third parties for the joint development, construction, ownership or operation of any project or for the provision of transmission capacity from such project.

(j) Other than the obligation to pay amounts due under Section 4, in no event shall any Party be liable to any other Party under any provision of this MOA for any losses, damages, costs or expenses for any direct, special, indirect, incidental, consequential, or punitive damages, including but not limited to loss of profit or revenue, whether based in whole or in part in contract or in tort, including negligence, strict liability, or any other theory of liability; provided, however, that damages for which a Party may be liable to any other Party under another agreement will not be considered to be special, indirect, incidental, or consequential damages hereunder.

(k) The Parties shall not be in breach of their respective obligations to the extent the failure to fulfill any obligation is due to an Uncontrollable Force. "Uncontrollable Force" means an event beyond the reasonable control of, and without the fault or negligence of, the Party claiming the Uncontrollable Force, that prevents that Party from performing its contractual obligations under this MOA and which, by exercise of that party's reasonable care, diligence and foresight, such Party was unable to avoid. Uncontrollable Forces include, but are not limited to:

(1) strikes or work stoppage;

(2) floods, earthquakes, or other natural disasters; terrorist acts; and

(3) final orders or injunctions issued by a court or regulatory body having competent subject matter jurisdiction which the Party claiming the Uncontrollable Force, after diligent efforts, was unable to have stayed, suspended, or set aside pending review by a court of competent subject matter jurisdiction.

Neither the unavailability of funds or financing, nor conditions of national or local economies or markets shall be considered an Uncontrollable Force. The economic hardship of a Party shall not

constitute an Uncontrollable Force. Nothing contained in this provision shall be construed to require any Party to settle any strike or labor dispute in which it may be involved.

If an Uncontrollable Force prevents a Party from performing any of its obligations under this MOA, such party shall: (1) immediately notify the other Parties of such Uncontrollable Force by any means practicable and confirm such notice in writing as soon as reasonably practicable; (2) use its best efforts to mitigate the effects of such Uncontrollable Force, remedy its inability to perform, and resume full performance of its obligation hereunder as soon as reasonably practicable; (3) keep the other Parties apprised of such efforts on an ongoing basis; and (4) provide written notice of the resumption of performance. Written notices sent under this section 10(k) must comply with Exhibit B, Notices and Contact Information.

11. WAIVER

No waiver of any provision or breach of this MOA shall be effective unless such waiver is in writing and signed by the waiving Party, and any such waiver shall not be deemed a waiver of any other provision of this MOA or any other breach of this MOA.

12. SIGNATURE

The Parties have caused this MOA to be executed as of the latest date all Parties have signed this MOA.

CITY OF SEATTLE CITY LIGHT DEPARTMENT		UNITED STATES OF AMERICA Department of Energy Bonneville Power Administration	
By:	Jorge Carrasco	By:	Harder Juj
Name: *(Print/ Type)*	Jorge Carrasco	Name: *(Print/ Type)*	Harder Juj
Title:	Superintendent	Title:	VP, Planning + Asset Mgmt.
Date:	1/31/12	Date:	1/31/12

PUGET SOUND ENERGY, INC.

By: Susan McLain

Name: Susan McLain
(Print/ Type)

Title: Senior Vice President Delivery Operations

Date: 1/31/12

EXHIBIT A
PREFERRED PLAN OF SERVICE

EXHIBIT B
NOTICES

Any notice required under this MOA shall be in writing and shall be delivered in person; or with proof of receipt by a nationally recognized delivery service or by United States Certified Mail. Notices are effective when received. Either Party may change the name or address for receipt of notice by providing notice of such change. The Parties shall deliver notices to the following person and address:

If to Seattle City Light:

Attention:
Phone:
Fax:
Email:

If by First Class Mail:

City of Seattle, City Light Department
(Customer Address)
(Customer City, State, Zip)

If by Overnight Delivery Service:
City of Seattle, City Light Department
(Customer Address)
(Customer City, State, Zip)

If to BPA:

Attention:
Phone:
Fax:
Email:

If by First Class Mail:

Bonneville Power Administration
P.O. Box 61409
Vancouver, WA 98666-1409

If by Overnight Delivery Service:
Bonneville Power Administration – TSE/TPP-2
7500 NE 41st Street – Suite 130
Vancouver, WA 98662

If to the Puget:

Attention:
Phone:
Fax:
Email:

If by First Class Mail:

Puget Sound Energy, Inc.
P.O. Box 97034
Bellevue, WA 98009-9734

If by Overnight Delivery Service:
Puget Sound Energy, Inc.
10885 N.E. 4th Street, Suite 1100
Bellevue, WA 98004-5591

EXHIBIT A
PREFERRED PLAN OF SERVICE

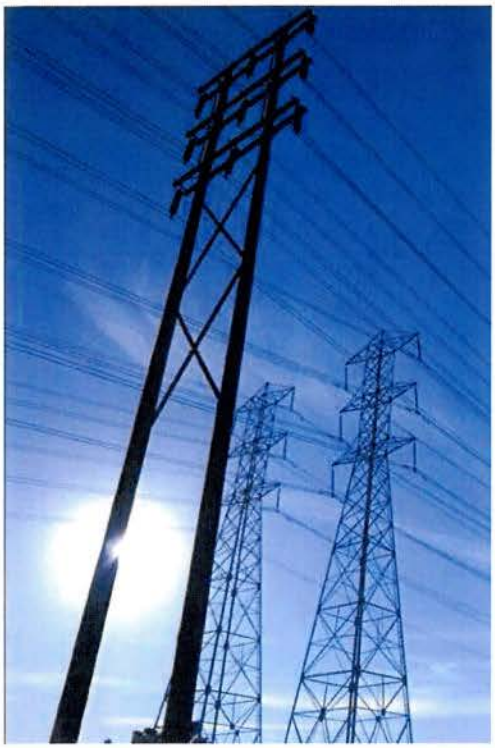

Updated Recommended Transmission Expansion Plan for the Puget Sound Area to Support Winter South-to-North Transfers

ColumbiaGrid

Puget Sound Area Study Team

Bonneville Power Administration, Puget Sound Energy, Seattle City Light, Snohomish County PUD, Tacoma Power, Powerex

Provisional Approval by the Study Team on April 25, 2011

Final Approval by the Study Team on October 28, 2011

Introduction and Conclusions

In October of 2010, the Puget Sound Area Study Team issued a report entitled "Transmission Expansion Plan for the Puget Sound Area." The report is available via the ColumbiaGrid website. The report details a transmission plan for the Puget Sound region that would, as a basic requirement, provides for reliable system performance while significantly improving the ability of the transmission grid to support power transfers between the Northwest and British Columbia. Since the release of the original report, the following changes have occurred that have led to the need for the Puget Sound Area Study Team to revise their transmission plan:

1) ***Additional scenarios*** – The Puget Sound area utilities have been meeting regularly since the publication of the original report in October 2010 and have developed several additional scenarios to be studied (e.g., the addition of a new Broad Street-Massachusetts 115 kV underground cable). In response, the study team repeated their prior analysis for the critical winter south-to-north condition for the new scenarios. The results of this analysis are shown in the table provided in Appendix A.

2) ***Increased likelihood that Puget Sound Energy will move forward with Sammamish-Lakeside-Talbot project*** – Since the development of the original plan, Puget Sound Energy has further developed their plan to rebuild two 115 kV lines to 230 kV (Sammamish-Lakeside-Talbot #1 and #2) and provide new 230/115 kV transformation at their Lakeside Substation. Although both lines will be rebuilt, only one of the lines may be initially energized at 230 kV. As stated in the prior report, this facility addition can delay the need to reconductor the Maple Valley-SnoKing 230 kV lines beyond the ten-year transmission planning horizon.

   The study team decided that since Puget Sound Energy is moving forward with this plan, the Sammamish-Lakeside-Talbot project should be listed as the proposed project in the plan instead of the Maple Valley-SnoKing reconductor. This project will give Puget Sound Energy the ability to provide necessary load support at Lakeside which cannot be achieved with the Maple Valley-SnoKing reconductor project, while providing similar Transmission Curtailment Risk Measure (TCRM) benefits as the Maple Valley-SnoKing reconductor project. A downside of the Sammamish-Lakeside-Talbot project is that its south-to-north Total Transfer Capability (TTC) is lower as compared to the Maple Valley-SnoKing reconductor. However, the Sammamish-Lakeside-Talbot project has additional benefits over the Maple Valley-SnoKing reconductor project in that it provides an additional 230 kV transmission path through the Puget Sound area and makes it feasible to reconductor rather than rebuild the Bothell-SnoKing 230 kV lines.

3) ***Increased likelihood that Seattle City Light will move forward with their North Downtown Substation Project*** – Since the development of the plan, Seattle City Light has indicated that plans to add a new North Downtown Substation have become more likely. The final plan is still being developed by SCL. The option studied includes a new underground cable (North Downtown-Massachusetts 230 kV), a new 115 kV line between North Downtown and Canal, and two 230/115 kV transformers at the proposed substation (see the following Figure One). This project was studied in the prior plan and, as identified previously, a third set of series inductors will be required on the new Canal-North Downtown 115 kV line with the addition of the North Downtown Substation. The plan for the system without, or prior to, the addition of the North Downtown Substation remains the same (adding series inductors on the two 115 kV underground cables). There is not a significant impact on the plan with or without the North Downtown Substation project as long as the project includes a third set of series inductors on the new North Downtown-Canal 115 kV line.

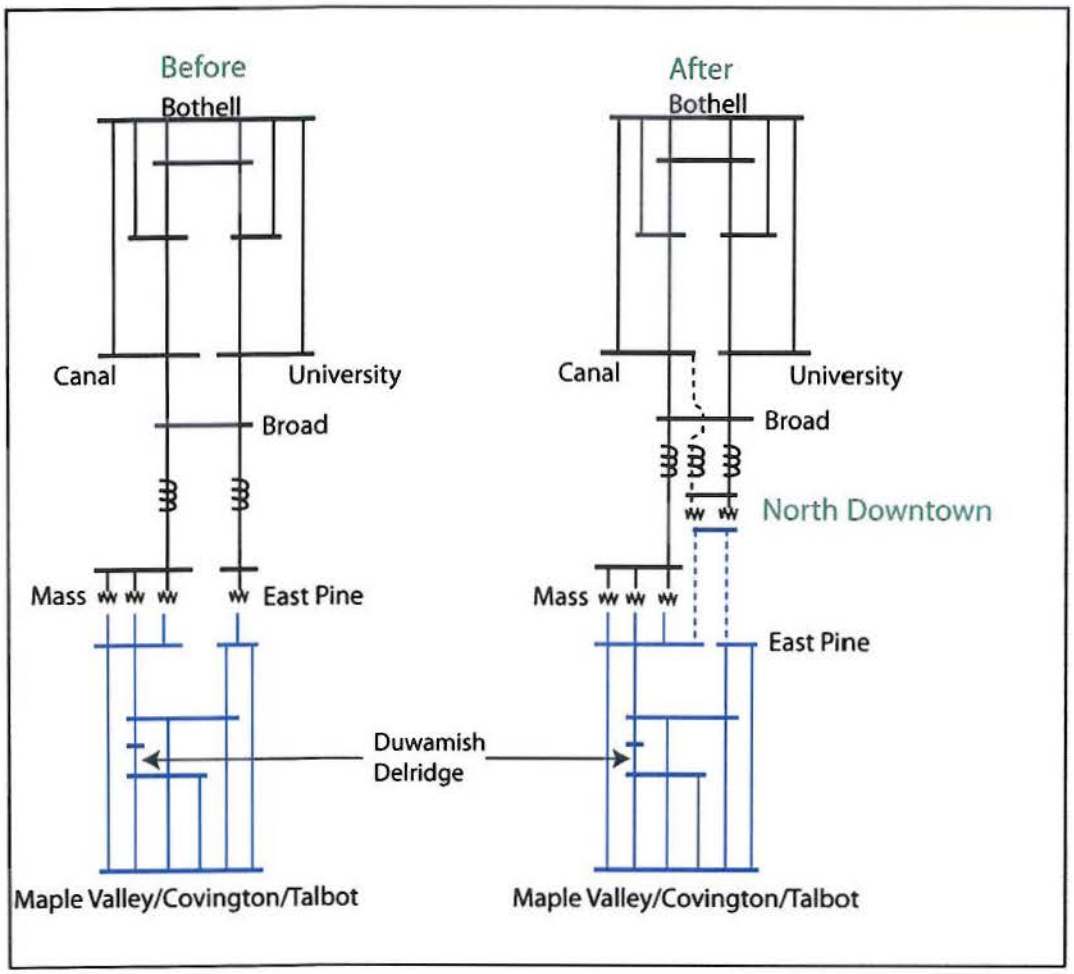

Figure One: One-Line Diagram with the proposed locations of the series inductor additions, before and after the Seattle City Light North Downtown Substation Project.

4) ***Seattle area line rating increases*** – Several key transmission lines in the region have been rerated to a higher capability. In some cases the new ratings provide a 77% increase over the ratings that were utilized in the original study. This has enabled the study team to reduce the size of the series inductors (from 26 ohms to 6 ohms) that were proposed for the Seattle City Light 115 kV transmission lines and cables. The smaller inductors lead to more power flowing through the Seattle City Light system resulting in the need to include an additional facility reconductor in the plan; the Duwamish-Delridge 230 kV line. The cost of this additional reconductor is estimated to be relatively low ($1.6 million). This additional cost is projected to be partially offset by the savings achieved by the installation of smaller inductors. The smaller inductors also reduce the need to add shunt capacitors to offset the reactive losses from the larger sized inductors.

5) ***Seattle City Light Update to TPS Settings*** - Seattle City Light has recently updated the TPS settings which have resulted in operational changes that preclude it from being used as a project in this study to reduce TCRM and increase TTC levels on the northern intertie. All results that use the previous scheme have not been included in this report.

As a result of the above changes, the plan to support south-to-north transfers has been revised as specified in this report. Additional transmission facilities, such as a second Portal Way 230/115 kV transformer, will likely be necessary to support north-to-south transfers. These additional facilities will be further analyzed in subsequent studies.

Overview of Revised Plan

As a result of the above changes, the Transmission Expansion Plan for the Puget Sound Area was revised and the new plan is shown in the following Figure Two:

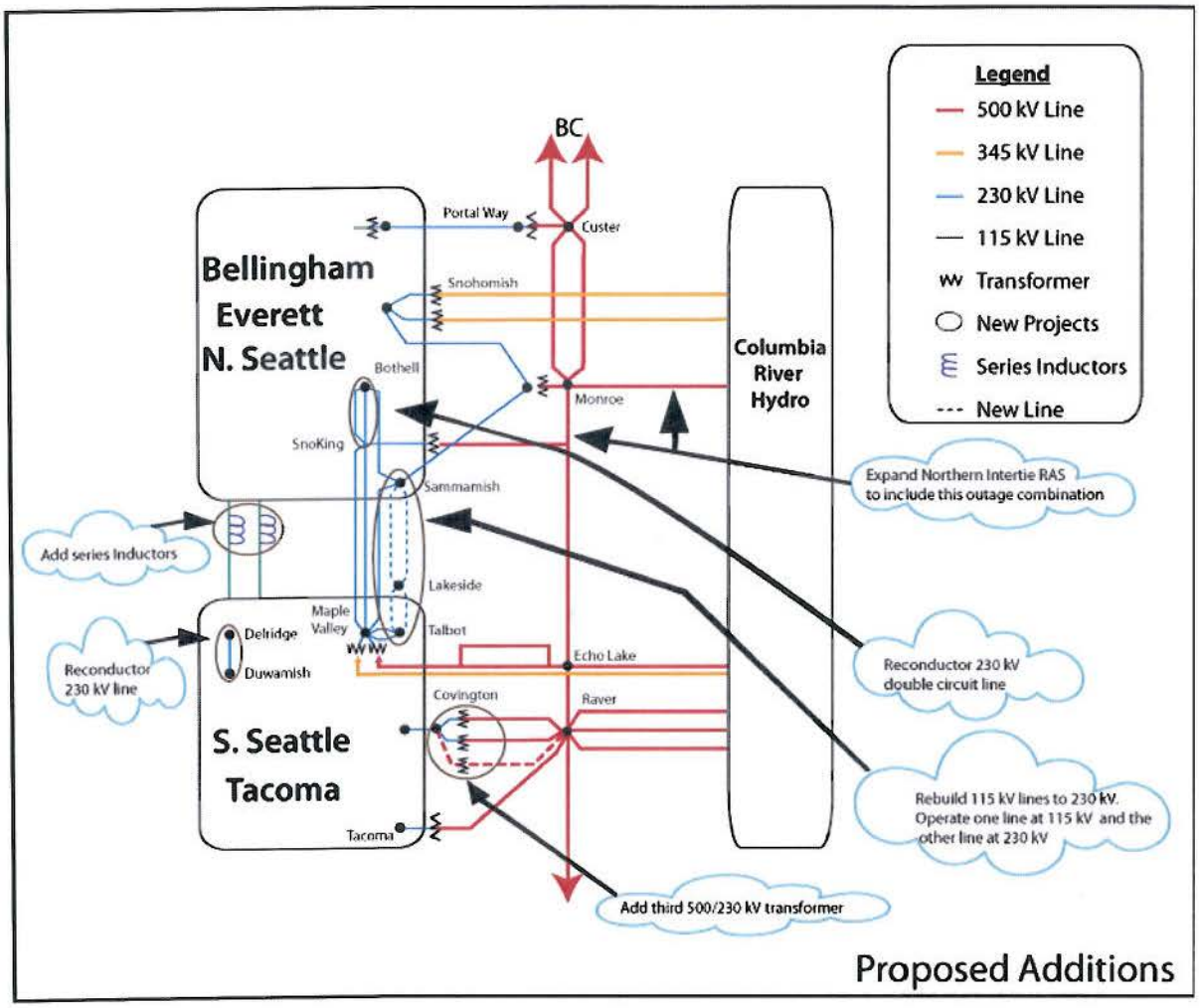

Figure Two: Revised Puget Sound Area Transmission Expansion Plan for Supporting South-to-North Transfers

Projects included in the Puget Sound Area Transmission Expansion Plan to support south-to-north transfers are:

- Reconductor the double circuit Bothell-SnoKing 230 kV lines with high temperature conductor
- Expand the Northern Intertie RAS
- Add a third Covington 500/230 kV transformer
- Reconductor the Delridge-Duwamish 230 kV line
- Add series inductors to the Massachusetts-Union-Broad and East Pine-Broad 115 kV lines in the downtown Seattle system. The final inductor size is under study and may vary from the 6 ohms specified in this report. Each line may have a different inductor size to optimize the system.
- Rebuild both the Sammamish-Lakeside-Talbot 115 kV lines to 230 kV. Energize one line at 230 kV and the other at 115 kV.

The cost estimates for the project in the preferred plan are shown in the following table. It should be noted that portions of the projects may be planned for local utility service and may not be necessary to accomplish the transfer capability goals of this study.

PSAST Preferred South-to-North Plan Cost Estimate	
	Cost Estimate (M)
Reconductor Bothell-SnoKing 230kV #1 & #2 with high temperature conductor	$3
Extend the Northern Intertie RAS to trip for the combined outage of the Chief Joseph-Monroe and Monroe-SnoKing-Echo Lake 500 kV lines	$3
Add a third Covington 500/230 kV transformer, a 500 kV terminal at Raver for the third Raver-Covington 500 kV line, and a 500 kV Bus at Covington	$60
Reconductor Delridge - Duwamish 230 kV Line with high temperature conductor	$2
6 ohm inductors on the two 115 kV cables out of SCL's Broad Street Substation	$13
Lakeside 230/115 kV transformer, rebuild both 115 kV Sammamish – Talbot lines to 230 kV energizing one line at 230 kV	$65
Total Preferred Projects	$146

* The majority of these estimates are preliminary estimates. More detailed estimates will be developed by the Puget Sound Area utilities.

Next Steps

Now that the overall south-to-north plan is complete, the individual transmission owners need to identify the parties responsible for each of the projects and agree on the cost allocation for the projects. After this has been completed, detailed feasibility studies, cost estimates, project timing, and schedules will be completed. In addition, the following project specific studies will be completed by the Puget Sound Area Study Team:

- North-to-South transfer conditions will be studied to determine the effect that the new preferred plan has on transfer capability and to determine if any additional projects are needed.
- Series Inductor Project: Studies need to be completed to determine the proper size for the series inductors, the impact on north-to-south transfers, and the preferred switching arrangement.
- Determine how long the proposed plan will last. The PSAST will grow the Northwest loads in the current 2020 base case to 2025 and 2030 load levels. The additional load will be served by eastern resources. TCRM and TTC values will be calculated to determine whether they may degrade over time.
- Northern Intertie RAS Expansion Project: The Puget Sound Area Study Team will be available to assist BPA and BC Hydro with any additional studies necessary to implement this RAS expansion.
- Covington Transformer Project: Additional studies will be completed by BPA, to further analyze alternative locations for this transformer addition, the need for a 500 kV switchyard at Covington, potential operational solutions, potential remedial action schemes, the size of the transformer, the impedance of the transformer, and the preferred connection to the 230 kV bus. The BPA studies will be coordinated with area utilities through the Puget Sound Area Study Team.

While the projects identified in this report improve the transfer capability through the Puget Sound Area, there remain curtailment risks for firm transfers during outage conditions (N-1-X). Consequently, the Puget Sound Area Study Team will continue to investigate cost effective ways to reduce the risk of firm curtailments.

Study Results

New winter south-to-north studies were completed for a variety of scenarios and the detailed study results are provided in Appendix A. The system performance for each scenario was compared using the following two measures in addition to cost and permitting feasibility:

1) ***Transmission Curtailment Risk Measure (TCRM):*** TCRM is a measure of the likelihood of experiencing curtailments of transfers between the Northwest and British Columbia. The higher the TCRM value the greater the exposure to curtailments. The TCRM analysis

includes the cases with all facilities in service as well as with any single facility out of service. A detailed description of the TCRM methodology is provided in the original report. In the original report, winter and summer conditions for both north-to-south and south-to-north transfers were studied. For this update, only winter conditions with south-to-north transfers were studied as that is the critical system state for the alternatives presented in this report.

2) ***Total Transfer Capability (TTC):*** The TTC (thermal only) of the Westside Northern Intertie (WSNI) was calculated for each of the options in the traditional way, with all lines in service. Only the winter south-to-north condition was studied, with 680 MW of generation operating in the Puget Sound Area. The specific generation unit assumptions are as described in Appendix J of the original report. Puget Sound Area generation during winter peak is between 950 MW and 1550 MW 80% of the time (when load has been greater than 6000MW along with temperature below 32 degrees F). With higher levels of Puget Sound Area generation, the TTC numbers shown in the tables would likely increase.

The major issues addressed in this study are the impacts of the various alternatives on the 115 kV system in the Seattle area, and the impacts of the various alternatives on the 230 kV system between the Maple Valley and SnoKing areas. In all cases, the other major projects as described in the original report are modeled, which include the Northern Intertie RAS expansion, third Covington transformer, and second Portal Way transformer. In addition, the Bothell-SnoKing rebuild project was included in most scenarios although sensitivity studies were conducted for the reconductor option which ended up being the preferred option. Provided below is a discussion of each of the major issues addressed by the study team and their conclusions.

1) 26 ohm versus 6 ohm series inductors

Table 1: Selected TCRM and TTC Results, 26 ohm inductors vs. 6 ohm inductors

Study #	Series Inductors on SCL's 115 kV Cables- 26 ohms	Series Inductors on SCL's 115 kV Cables- 6 ohms	Maple Valley-SnoKing High Temp	PSE's Sammamish - Lakeside - Talbot 115kV to 230kV Upgrade Project (Two Lines Operated at 230 kV)	Total TCRM - Without TCRM Lines Outside of the Puget Sound Area	Winter South North WSNI Thermal TTC at 680 MW Puget Sound Generation
3	X		X		10,304	2,270
4		X	X		8,433	2,297
17	X			X	10,460	1,773
18		X		X	8,666	2,038

With the changes in 115 kV line ratings, the Seattle 115 kV system is capable of accommodating greater flows. As a result, using a series inductor impedance greater than 6 ohms is no longer necessary to reduce the loadings on the Seattle 115 kV system. In fact, the TCRM is slightly better (lower) with the smaller 6 ohm inductors. Prior studies have also indicated that the smaller inductor size provided better results for summer north-to-south conditions. Higher impedance inductors also would have the undesirable effect of pushing more power over to the Maple Valley-SnoKing lines and reducing the TTC. In addition the smaller inductors require the addition of fewer shunt capacitors to offset the reactive losses from the inductors. The 6 ohm inductors have the effect of adding a circuit reactance that is equivalent to 8 miles of overhead 115 kV line. The 6 ohm inductors are now the preferred 115 kV project due to better performance and lower cost.

2) 6 ohm series inductors versus phase shifting transformers

Table 2: 6 ohm series inductors versus phase shifting transformers

Study #	SCL Phase Shifting Transformer	Series Inductors on SCL's 115 kV Cables- 6 ohms	Maple Valley-SnoKing High Temp	PSE's Sammamish - Lakeside - Talbot 115kV to 230kV Upgrade Project (Two Lines Operated at 230 kV)	Total TCRM - Without TCRM Lines Outside of the Puget Sound Area	Winter South North WSNI Thermal TTC at 680 MW Puget Sound Generation
1	X		X		13,122	2,455
4		X	X		8,433	2,297
15	X			X	11,500	2,136
18		X		X	8,666	2,038

The TCRM studies for the phase shifting transformer project may not reflect the true performance of this project due to the difficulty of accurately modeling the phase shifting transformer operating strategy. As a result, while the TCRM studies show poorer performance for the phase shifting transformers than for the series inductor project, the study team believes that this result is a shortcoming of the phase shifter modeling and, in fact, the phase shifters should perform as well or better than the series inductors. This was the conclusion of the TTC studies, where a benefit was observed when using the phase shifting transformers instead of fixed series inductors. However, as the incremental benefits are not believed to be sufficient to justify the higher capital and maintenance costs of the phase shifter option, the 6 ohm series inductors remain the recommended project.

3) 6 ohm series inductors versus adding a third 115 kV cable

Table 3: 6 ohm inductor versus adding a third 115 kV cable

Study #	Series Inductors on SCL's 115 kV Cables- 6 ohms	3rd 115 kV Underground Cable from Mass to Broad Street & Mass Bank 1 Energized	Maple Valley-SnoKing High Temp	PSE's Sammamish - Lakeside - Talbot 115kV to 230kV Upgrade Project (Two Lines Operated at 230 kV)	Total TCRM - Without TCRM Lines Outside of the Puget Sound Area	Winter South North WSNI Thermal TTC at 680 MW Puget Sound Generation
4	X		X		8,433	2,297
5		X	X		19,027	1,513
18	X			X	8,666	2,038
19		X		X	11,213	2,297

This option examines adding a third Seattle City Light 115 kV underground cable (a second cable from Broad Street to Massachusetts) in place of the 6 ohm inductors. The results for this alternative vary depending on whether the Sammamish-Lakeside-Talbot lines are upgraded to 230 kV or the Maple Valley-SnoKing lines are reconductored. With the preferred plan (upgrading the Sammamish-Lakeside-Talbot lines to 230 kV), there is a benefit to the alternative of adding a third cable from a TTC perspective and a slight benefit to the series inductor option from the TCRM perspective. Conversely, if the Maple Valley-SnoKing reconductor project moves forward, the series inductor option performs better from both a TCRM and TTC perspective. This is because if a third cable is added, there is still a need for the series inductors to eliminate overloading on the Broad Street-East Pine 115 kV cable, the East Pine-Maple Valley 230 kV line, and the Massachusetts 230/115 kV transformers. The third cable option is deemed to be less preferable to the recommended option primarily because the cost of the third cable is expected to far exceed the cost of the series inductors. In addition, the construction of an additional Broad-Massachusetts 115 kV cable is incompatible with Seattle City Light's future plan to add a new 230 kV cable as part of their North Downtown Substation

Project (North Downtown-Massachusetts 230 kV). The 6 ohm series inductors remain the preferred project due to better performance and lower cost.

4) ***6 Ohm Series inductors versus replacing cables***

Table 4: 6 ohm inductors versus replacing cables

Study #	Series Inductors on SCL's 115 kV Cables- 6 ohms	Replace SCL's Existing 115 kV Cables (no inductors)	Maple Valley-SnoKing High Temp	PSE's Sammamish - Lakeside - Talbot 115kV to 230kV Upgrade Project (Two Lines Operated at 230 kV)	Total TCRM - Without TCRM Lines Outside of the Puget Sound Area	Winter South North WSNI Thermal TTC at 680 MW Puget Sound Generation
4	X		X		8,433	2,297
6		X	X		19,398	1,602
18	X			X	8,666	2,038
20		X		X	11,746	2,210

If the 6 ohm inductors are in place, potential overloading on the cables is no longer an issue so rebuilding the cables would have no benefit. This option examines rebuilding the cables in lieu of the 6 ohm inductors. The results for this alternative vary depending on whether the Sammamish-Lakeside-Talbot lines are upgraded to 230 kV or the Maple Valley-SnoKing lines are reconductored. With the preferred plan (upgrading the Sammamish-Lakeside-Talbot lines to 230 kV), the series inductors perform better from a TCRM perspective and slightly worse from a TTC perspective. If the Maple Valley-SnoKing reconductor project moves forward then the series inductor option performs better from both a TCRM and TTC perspective. The TCRM performance is better for the series inductor options because if the cables are replaced, there would be other limits reached on the downtown Seattle system. The additional limits reached that account for most of the TCRM increase include the East Pine 230/115 kV transformer and the Massachusetts 230/115 kV transformers. The series inductors remain the preferred project due to better performance and lower cost.

5) 6 ohm *series inductors versus the Seattle City Light North Downtown Substation project with and without series inductors*

Table 5: 6 ohm inductors versus the Seattle City Light North Downtown Substation project with and without series inductors

Study #	Series Inductors on SCL's 115 kV Cables- 6 ohms	SCL's North Downtown Substation	SCL's North Downtown Substation (6 ohm inductors)	Maple Valley-SnoKing High Temp	PSE's Sammamish - Lakeside - Talbot 115kV to 230kV Upgrade Project (Two Lines Operated at 230 kV)	Total TCRM - Without TCRM Lines Outside of the Puget Sound Area	Winter South North WSNI Thermal TTC at 680 MW Puget Sound Generation
4	X			X		8,433	2,297
32		X		X		117,049	-1,380
36			X	X		8,778	2,672
18	X				X	8,666	2,038
34		X			X	38,594	-832
38			X		X	9,101	2,207

The study results indicate that the TCRM would increase dramatically and the TTC would be negative (not capable of south-to-north transfers) unless the series inductors are included in the plans for the new North Downtown Substation. The majority of this increase is due to overloading on the Broad-North Downtown 115 kV cable. As a result, the series inductors are needed before and after the addition of the North Downtown Substation Project.

6) **6 ohm series inductors:** ***Reinforcing Maple Valley–SnoKing 230 kV lines versus options to upgrade Sammamish-Lakeside-Talbot 115 kV lines versus Monroe-Echo Lake #2***

Table 6: 6 ohm inductors – Reinforcing Maple Valley–SnoKing 230 kV lines versus options to upgrade Sammamish-Lakeside-Talbot 115 kV lines versus Monroe-Echo Lake #2

Study #	Series Inductors on SCL's 115 kV Cables- 6 ohms	Maple Valley-SnoKing High Temp	Maple Valley-SnoKing Rebuild	PSE's Sammamish - Lakeside - Talbot 115kV to 230kV Upgrade Project (Two Lines Operated at 230 kV)	PSE's Sammamish - Lakeside - Talbot 115kV to 230kV Upgrade Project (One Line Operated at 230 kV)	Monroe-Echo Lake #2 500kV	Total TCRM - Without TCRM Lines Outside of the Puget Sound Area	Winter South North WSNI Thermal TTC at 680 MW Puget Sound Generation
4	X	X					8,433	2,297
11	X		X				7,623	2,632
18	X			X			8,666	2,038
28	X	X		X			9,003	2,700
81	X				X		13,422	1,643
80	X					X	5,047	2,875

The lowest TCRM and the highest TTC for line improvements east of Lake Washington can be achieved by building the Monroe-Echo Lake #2 500 kV line in addition to the 6 ohm series inductors. Unfortunately, this is also the highest cost transmission option.

From a TCRM perspective there is little difference between the Maple Valley – SnoKing reinforcement options and the Sammamish – Lakeside – Talbot upgrade project with two lines operated at 230 kV although the Maple Valley-SnoKing rebuild option performs slightly better than the others. From a TTC perspective, there is an advantage for the Maple Valley-SnoKing options; particularly the rebuild option. However, this was not deemed to be a sufficient advantage over the preferred Sammamish-Lakeside-Talbot 230 kV upgrade project with two lines operated at 230 kV. A major benefit of the Sammamish-Lakeside-Talbot options is that

they would provide necessary load service to Lakeside Substation which the Maple Valley-SnoKing options would not. Pursuing the Sammamish-Lakeside-Talbot options at this time does not preclude reconductoring the Maple Valley-SnoKing lines at a later time.

The Sammamish – Lakeside – Talbot upgrade project can defer some of its substation construction costs by initially upgrading the 115 kV lines to 230 kV and operating one line at 115 kV and one line at 230 kV. This option did not perform as well as operating both lines at 230 kV for both TCRM and TTC. The reduction in performance has been deemed acceptable for the cost savings. The second line planned to be cut-over to 230 kV operation at a later date.

7) **6 ohm series inductors and Sammamish-Lakeside-Talbot upgrade:** ***Bothell-SnoKing rebuild versus reconductor***

Table 7: 6 ohm series inductors and Sammamish-Lakeside-Talbot upgrade: Bothell-SnoKing rebuild versus reconductor

Study #	Series Inductors on SCL's 115 kV Cables- 6 ohms	PSE's Sammamish - Lakeside - Talbot 115kV to 230kV Upgrade Project (Two Lines Operated at 230 kV)	PSE's Sammamish - Lakeside - Talbot 115kV to 230kV Upgrade Project (One Line Operated at 230 kV)	Bothell - SnoKing Rebuild	Bothell - SnoKing High Temp Instead of Rebuild	Total TCRM - Without TCRM Lines Outside of the Puget Sound Area	Winter South North WSNI Thermal TTC at 680 MW Puget Sound Generation
18	X	X		X		8,666	2,038
47	X	X			X	9,512	2,086
81	X		X	X		13,422	1,643
82	X		X		X	13,663	1,677

For either Sammamish – Lakeside – Talbot upgrade option the TCRM and TTC results are similar for the Bothell-SnoKing rebuild and reconductoring options. The reconductor of the Bothell-SnoKing lines would provide acceptable performance at a lower cost with minimal permitting and mitigation requirements.

Appendix A

Table of TCRM and TTC Results

ColumbiaGrid PSAST Options for N-1-X TCRM Determination

	115 kV Reinforcement Options									230 kV & 500 kV Reinforcement Options							TCRM & TTC Values		
Study #	SCL Phase Shifting Transformer	Series Inductors on SCL's 115 kV Cables- 26 ohms	Series Inductors on SCL's 115 kV Cables- 6 ohms	3rd 115 kV Underground Cable from Mass to Broad Street & Mass Bank 1 Energized	Replace SCL's Existing 115 kV Cables (no inductors)	Replace SCL's Existing 115 kV Cables (6 ohm inductors)	SCL's North Downtown Substation	SCL's North Downtown Substation (6 ohm inductors)	Maple Valley-SnoKing High Temp	Maple Valley-SnoKing Rebuild	PSE's Sammamish - Lakeside - Talbot 115kV to 230kV Upgrade Project (Two Lines Operated at 230 kV)	PSE's Sammamish - Lakeside - Talbot 115kV to 230kV Upgrade Project (One Line Operated at 230 kV)	Monroe-Echo Lake #2 500kV	Bothell - SnoKing High Temp Instead of Rebuild	With Covington, Portalway, Extended RAS, Bothell - SnoKing Upgrade	Total TCRM - Without TCRM Lines Outside of the Puget Sound Area	TTC (Thermal Only)	Notes
54																308,343	-	PSAST 2020 Winter South-to-North Expansion Plan Base Case
24															X	73,898	920	
1	X								X						X	13,122	2455	
3		X							X						X	10,304	2270	
4			X						X						X	8,433	2297	
5				X					X						X	19,027	1513	
6					X				X						X	19,398	1602	
7						X			X						X	8,258	2448	
32							X		X						X	117,049	-1380	
36								X	X						X	8,778	2672	
8	X									X					X	14,039	2692	
10		X								X					X	12,659	2652	
11			X							X					X	7,623	2632	
12				X						X					X	13,172	1820	
13					X					X					X	13,012	2120	
14						X				X					X	7,423	2664	
33							X			X					X	82,697	-1350	
37								X		X					X	7,111	2708	
15	X										X				X	11,500	2136	
17		X									X				X	10,460	1773	
18			X								X				X	8,666	2038	
81			X									X			X	13,422	1643	
47			X								X			X	X	9,512	2086	
82			X									X		X	X	13,663	1677	Preferred Plan
19				X							X				X	11,213	2297	
20					X						X				X	11,746	2210	
21						X					X				X	8,666	2044	
34							X				X				X	38,594	-832	
38								X			X				X	9,101	2207	
49								X			X			X	X	10,286	2233	
25	X								X		X				X	9,664	2745	
27		X							X		X				X	9,288	2497	
28			X						X		X				X	9,003	2700	
29				X					X		X				X	11,460	2305	
30					X				X		X				X	12,395	2377	
31						X			X		X				X	9,003	2700	
35							X		X		X				X	38,463	-804	
39								X	X		X				X	9,296	2732	
56								X	X		X			X	X	10,285	2753	
22													X		X	13,501	2104	
40							X						X		X	46,466	-292	
41								X					X		X	4,143	2916	
80			X										X		X	5,047	2875	

EXHIBIT B
NOTICES

Any notice required under this MOA shall be in writing and shall be delivered in person; or with proof of receipt by a nationally recognized delivery service or by United States Certified Mail. Notices are effective when received. Either Party may change the name or address for receipt of notice by providing notice of such change. The Parties shall deliver notices to the following person and address:

If to Seattle City Light:

Attention:
Phone:
Fax:
Email:

If by First Class Mail:

City of Seattle, City Light Department
(Customer Address)
(Customer City, State, Zip)

If by Overnight Delivery Service:
City of Seattle, City Light Department
(Customer Address)
(Customer City, State, Zip)

If to BPA:

Attention:
Phone:
Fax:
Email:

If by First Class Mail:

Bonneville Power Administration
P.O. Box 61409
Vancouver, WA 98666-1409

If by Overnight Delivery Service:
Bonneville Power Administration – TSE/TPP-2
7500 NE 41st Street – Suite 130
Vancouver, WA 98662

If to the Puget:

Attention:
Phone:
Fax:
Email:

If by First Class Mail:

Puget Sound Energy, Inc.
P.O. Box 97034
Bellevue, WA 98009-9734

If by Overnight Delivery Service:
Puget Sound Energy, Inc.
10885 N.E. 4th Street, Suite 1100
Bellevue, WA 98004-5591

Department of Energy

Bonneville Power Administration
P.O. Box 61409
Vancouver, WA 98666-1409

TRANSMISSION SERVICES

August X, 2014

In reply refer to: TSE/TPP-2

Contract No. 14TX-16053
Letter Agreement

Ms. Booga Gilbertson
Vice President, Operations Services
Puget Sound Energy, Inc.
10885 NE 4th Street, PSE – 11S
Bellevue, WA 98004

Mr. Phillip West
Customer Service Energy Officer
City of Seattle, City Light Department
700 Fifth Avenue, Suite 3200
Seattle, WA 98104-5031

Dear Ms. Gilbertson and Mr. West:

The Bonneville Power Administration (BPA), Puget Sound Energy, Inc, (PSE) and City of Seattle, City Light Department (SCL) are parties to the Memorandum of Agreement (MOA), Contract No. 11TX-15450, relating to the Preferred Puget Sound Area Plan of Service Projects and Cost Allocation (Projects). The parties to the MOA are currently in the initial stages of development of the P~~p~~rojects described in the MOA. As this has progressed, certain aspects of the MOA were identified that the parties believe need to be clarified.

This Letter Agreement (Agreement) is intended to clarify the scope changes related to the Covington 500 kV Transformer Addition Project described in Section 3(a)(1) of the MOA and the Bothell to SnoKing Reconductor Project described in Section 3(c)(1) of the MOA.

BPA's transformer addition originally planned for Covington Substation has been moved to Raver Substation. There is no change in financial responsibility under the MOA due to this relocation.

The Bothell to SnoKing Reconductor Project was identified in the MOA as an SCL project. However, during subsequent discussions it was discovered that BPA owns the first ½ mile of these lines on the SnoKing end. BPA will rebuild its owned portion of these lines at its cost, including any necessary replacement of equipment within SnoKing Substation associated with these lines.

Please sign all originals of this Agreement where indicated below, retain one original for your records and return the remaining originals to my attention at one of the following addresses at your earliest convenience, but not later than Close of Business on September xx, 2014:

First Class Mail

Bonneville Power Administration
Mail Stop: TSE/TPP-2
P.O. Box 61409
Vancouver, WA 98666-1409

Overnight Delivery Service

Bonneville Power Administration
Mail Stop: TSE/TPP-2
7500 NE 41st Street – Suite 130
Vancouver, WA 98662

BPA will ensure that ~~Puget~~ PSE and SCL have a full set of original signature pages.

If you have any questions, please call me at (360) 619-6015.

Sincerely,

Toni L. Timberman
Senior Transmission Account Executive
Transmission Sales

~~CONCUR:~~

PUGET SOUND ENERGY, INC.

By: _____

Name: _____
(Print/Type)

Title: _____

Date: _____

CITY OF SEATTLE,
CITY LIGHT DEPARTMENT

By: _____

Name: _____
(Print/Type)

Title: _____

Date: _____

bcc:
C. Olsen– KSC/-TPP-1
B. Bennett – LT-7
M. Marleau – TEP/TPP-1
J. Jusupovic – TPC/TPP-4
J. Weiss – TPCV/COVINGTON
T. Timberman – TSE/TPP-2
P. Gibson – TSES/TPP-2
Customer File – TSE/TPP-2 (TM-11, Puget Sound Energy, Inc.)
Customer File – TSE/TPP-2 (TM-11, City of Seattle, City Light Department-)
Official File – CCM_-Support (Agreement 14TX-16053)

(W:\CT\Puget Sound Energy, Inc\Drafts\16053_PSE-SCL-PSANI MOA SCOPE CHANGE LTR AGMT.Doc)

Department of Energy

Bonneville Power Administration
P.O. Box 61409
Vancouver, WA 98666-1409

TRANSMISSION SERVICES

August XX, 2014

In reply refer to: TSE/TPP-2

Contract No. 14TX-16054
Letter Agreement

Ms. Booga Gilbertson
Vice President,
Operations Services
Puget Sound Energy, Inc.
10885 NE 4th Street, PSE – 11S
Bellevue, WA 98004

Dear Ms. Gilbertson:

The Bonneville Power Administration (BPA), Puget Sound Energy, Inc, (PSE) and City of Seattle, City Light Department (SCL) are parties to the Memorandum of Agreement (MOA), Contract No. 11TX-15450, relating to the Preferred Puget Sound Area Plan of Service Projects and Cost Allocation (Projects). The parties to the MOA are currently in the initial stages of development of the Pprojects described in the MOA. As this has progressed, certain aspects of the MOA were identified that the parties believe need to be clarified.

This Letter Agreement (Agreement) is intended to clarify the use of BPA funds contributed toward the adjusted projected capital cost of the Puget Preferred Plan Projects described in Sections 4(c) and 5(a) of the MOA.

The parties acknowledge that BPA is not involved in any manner or capacity in PSE's Sammamish to Lakeside to Talbot Rebuild Project and agree that no BPA funds provided under the MOA will be allocated to PSE's Sammamish to Lakeside to Talbot Rebuild Project. Instead, all BPA funds under the MOA will be allocated to PSE's Lakeside 230 kV Transformer Addition Project as well as the other BPA- and SCL Preferred Plan Projects identified in the MOA.

Please sign all originals of this Agreement where indicated below, retain one original for your records and return the remaining original to my attention at one of the following addresses at your earliest convenience, but not later than Close of Business on September xx, 2014:

First Class Mail	Overnight Delivery Service
Bonneville Power Administration Mail Stop: TSE/TPP-2 P.O. Box 61409 Vancouver, WA 98666-1409	Bonneville Power Administration Mail Stop: TSE/TPP-2 7500 NE 41st Street – Suite 130 Vancouver, WA 98662

If you have any questions, please call me at (360) 619-6015.

Sincerely,

Toni L. Timberman
Senior Transmission Account Executive
Transmission Sales

~~CONCUR:~~

PUGET SOUND ENERGY, INC.

By: _____

Name: _____
(Print/Type)

Title: _____

Date: _____

DRAFT

bcc:
C. Olsen– KSC/-TPP-1
B. Bennett – LT-7
M. Marleau – TEP/TPP-1
J. Jusupovic – TPC/TPP-4
J. Weiss – TPCV/COVINGTON
T. Timberman – TSE/TPP-2
P. Gibson – TSES/TPP-2
Customer File – TSE/-TPP-2 (TM-11, Puget Sound Energy, Inc.)
Customer File – TSE/TPP-2 (TM-11, City of Seattle, City Light Department-)
Official File – CCM_-Support (Agreement 14TX-16054)

(W:\CT\Puget Sound Energy, Inc\Drafts\16054 PSANI MOA_USE OF FUNDS LTR AGMT.Doc)

DRAFT

Department of Energy

Bonneville Power Administration
P.O. Box 61409
Vancouver, WA 98666-1409

TRANSMISSION SERVICES

August XX, 2014

In reply refer to: TSE/TPP-2

Contract No. 14TX-16060
Letter Agreement

Ms. Booga Gilbertson
Vice President Operations Services
Puget Sound Energy, Inc.
P.O. Box 90868
Bellevue, WA 98009-0868

Mr. Phillip West
Customer Service Energy Officer
City of Seattle, City Light Department
700 Fifth Ave., Suite 2822
Seattle, WA 98104-5031

Dear Ms. Gilbertson and Mr. West:

The Bonneville Power Administration (BPA), Puget Sound Energy, Inc., (PSE) and City of Seattle, City Light Department (SCL) are parties to the Memorandum of Agreement (MOA), Contract No. 11TX-15450, relating to the Preferred Puget Sound Area Plan of Service Projects and Cost Allocation (Projects). The parties to the MOA are currently in the initial stages of development of the projects described in the MOA. As this has progressed, certain aspects of the MOA were identified that the parties believe need to be clarified.

This Letter Agreement (Agreement) is intended to clarify BPA's obligations under the National Environmental Policy Act (NEPA) for its role in the MOA, as described in Section 8 of the MOA, as well as the nature of the ~~Preferred Plan Projects~~Projects described in the MOA for the purposes of NEPA.

With respect to environmental compliance BPA, as a Federal agency, has certain obligations and responsibilities under NEPA and other federal laws (collectively the NEPA review process) that it must fulfill before it can make a final decision concerning whether to participate in implementation of certain ~~of the Preferred Plan~~ Projects described in Section 3 of the MOA and the capital cost allocation described in Sections 4 and 5 of the MOA. Nothing in the MOA shall be construed as obligating or committing BPA to make a final decision concerning any of the ~~Preferred Plan~~ Projects and capital cost allocation before completing the NEPA review process. In addition, BPA reserves the right to determine the appropriate NEPA and other environmental compliance strategies for its actions under the MOA, and to choose any alternatives considered in the NEPA process, including the no-action alternative.

Furthermore, the parties acknowledge and agree that while the MOA identifies a number of ~~Preferred Plan~~ Projects to be undertaken by the parties, each of these P~~p~~rojects could proceed independently from the others and that no single project is contingent or dependent upon another in the goal of relieving transmission congestion in the Puget Sound Area. As such, BPA, SCL, and PSE may elect to conduct separate environmental reviews for each of the P~~p~~rojects identified in the MOA.

Please sign all originals of this Agreement where indicated below, retain one original for your records and return the remaining originals to my attention at one of the following addresses at your earliest convenience, but not later than Close of Business on September xx, 2014:

First Class Mail	Overnight Delivery Service
Bonneville Power Administration	Bonneville Power Administration
Mail Stop: TSE/TPP-2	Mail Stop: TSE/TPP-2
P.O. Box 61409	7500 NE 41st Street – Suite 130
Vancouver, WA 98666-1409	Vancouver, WA 98662

BPA will ensure that PSE~~uget~~ and SCL have a full set of original signature pages.

Please do not hesitate to contact me at (360) 619-6015, or BPA's Environmental Specialist, Justin Moffett at (503) 230-3233 if you would like to discuss this information.

Sincerely,

Toni L. Timberman
Senior Transmission Account Executive
Transmission Sales

~~CONCUR:~~

PUGET SOUND ENERGY, INC.

By: _____

Name: _____
(Print/Type)

Title: _____

Date: _____

CITY OF SEATTLE,
CITY LIGHT DEPARTMENT

By: _____

Name: _____
(Print/Type)

Title: _____

Date: _____

bcc:
J. Moffett – KEC-4
C. Olsen– KSC/-TPP-1
B. Bennett – LT-7
M. Marleau – TEP/TPP-1
J. Jusupovic – TPC/TPP-4
J. Weiss – TPCV/COVINGTON
T. Timberman – TSE/TPP-2
P. Gibson – TSES/TPP-2
Customer File – TSE/-TPP-2 (TM-11, Puget Sound Energy, Inc.)
Customer File – TSE/TPP-2 (TM-11, City of Seattle, City Light Department.)
Official File – CCM_-Support (Agreement 14TX-16060)

(W:\CT\Puget Sound Energy, Inc\Drafts\16060 PSANI MOA NEPA LTR AGMT 8_8 TT.Doc)

Formatted: Tab stops: 0.57", Left

Department of Energy

Bonneville Power Administration
P.O. Box 61409
Vancouver, WA 98666-1409

TRANSMISSION SERVICES

August X, 2014

In reply refer to: TSE/TPP-2

Contract No. 14TX-16062
Letter Agreement

Ms. Booga Gilbertson
Vice President, Operations Services
Puget Sound Energy, Inc.
10885 NE 4th Street, PSE – 11S
Bellevue, WA 98004

Mr. Phillip West
Customer Service Energy Officer
City of Seattle, City Light Department
700 Fifth Avenue, Suite 3200
Seattle, WA 98104-5031

Dear Ms. Gilbertson and Mr. West:

The Bonneville Power Administration (BPA), ~~the~~ City of Seattle, City Light Department (SCL) and Puget Sound Energy, Inc. (PSE) are parties to the Memorandum of Agreement (MOA), Contract No. 11TX-15450, relating to the Preferred Puget Sound Area Plan of Service Projects and Cost Allocation (Projects). The parties to the MOA are currently in the initial stages of development of the P~~p~~rojects described in the MOA. As this has progressed certain aspects of the MOA were identified that the parties believe need to be clarified.

This Letter Agreement (Agreement) is to meet the requirement in Section 7, Payment Schedule, of the MOA, which states that "The Parties shall agree in writing to the method and schedule for the cost share contributions to be made under this MOA." BPA, PSE~~uget~~ and SCL~~eattle~~ agree that waiting until the completion of a project before exchanging funds (as specified in Section 7) is not the preferred course of action, given the potential for multiple years delay for completion of a project. An alternative arrangement is described below.

The following Financial Terms and Conditions shall apply to all cost sharing obligations incurred under the MOA:

FINANCIAL TERMS AND CONDITIONS STATEMENT

Each Party's cost obligation for performance of the duties associated with construction of each Preferred Plan Project shall be as specified in Sections 4 and 5 of the MOA. The cost of performing the duties associated with construction of each Preferred Plan Project shall be the actual cost of doing the work plus an overhead rate of xx% for labor and yy% for materials, representing the indirect costs of the project office plus the contractual support costs of contract negotiation, billing and accounting functions, and contract management.

Comment [TLT1]: Specify separate overheads for each Party?

Payments made to BPA shall be held in an account established for this Agreement. If BPA needs additional funds to complete the work at any time during performance of the project, BPA may request, in writing, for PSE to advance such additional funds to BPA for deposit in the account. PSE shall advance such additional funds within 30 days of BPA's written request, and BPA may temporarily stop work until PSE supplies the requested funds. If PSE does not advance such

DRAFT

additional funds by the due date or, if at any time before completion of the project PSE elects to stop work under this Agreement, BPA will cease all work and restore, as a cost to the project at PSE's expense, government facilities and/or records (1) to their condition prior to the beginning of work under this Agreement, or (2) to some other mutually agreeable condition.

Within a reasonable time after completion of the project BPA shall make a full accounting to PSE showing the actual costs charged against the account. BPA shall either remit any unexpended balance in the account to PSE or bill for any costs in excess of the deposits in the account. PSE shall pay any excess costs within 30 days of the billing.

Payments not received within 30 days of the invoice date will accrue interest on the amount due from the invoice date to the date paid, at an annual interest rate equal to the higher of i) the prime rate (as reported in the Wall Street Journal in the first issue published during the month in which payment by PSE is due) plus 4 percent; or ii) such prime rate multiplied by 1.5.

- Language if cost is exceeding estimate in MOA –
- Periodic (every six months?) update on status of project and where it stands with respect to estimated cost
- Provisions for each party to invoice the others
- And???

DRAFT

Please sign all originals of this Agreement where indicated below, retain one original for your records and return the remaining originals to my attention at one of the following addresses at your earliest convenience, but not later than Close of Business on September xx, 2014:

First Class Mail	Overnight Delivery Service
Bonneville Power Administration Mail Stop: TSE/TPP-2 P.O. Box 61409 Vancouver, WA 98666-1409	Bonneville Power Administration Mail Stop: TSE/TPP-2 7500 NE 41st Street – Suite 130 Vancouver, WA 98662

BPA will ensure that ~~Puget~~ PSE and SCL have a full set of original signature pages.

If you have any questions, please call me at (360) 619-6015.

Sincerely,

Toni L. Timberman
Senior Transmission Account Executive
Transmission Sales

~~CONCUR:~~

PUGET SOUND ENERGY, INC.

By: _____

Name: _____
(Print/Type)

Title: _____

Date: _____

CITY OF SEATTLE,
CITY LIGHT DEPARTMENT

By: _____

Name: _____
(Print/Type)

Title: _____

Date: _____

DRAFT

bcc:
R. Shier – FRG-2
C. Olsen– KSC-TPP-1
B. Bennett – LT-7
M. Marleau – TEP/TPP-1
M. Holst – TEPO/TPP-1
J. Jusupovic – TPC/TPP-4
J. Weiss – TPCV/COVINGTON
T. Timberman – TSE/TPP-2
P. Gibson – TSES/TPP-2
Customer File – TSE/-TPP-2 (TM-11, Puget Sound Energy, Inc.)
Customer File – TSE/TPP-2 (TM-11, City of Seattle, City Light Department-)
Official File – CCM_-Support (Agreement 14TX-16062)

(W:\CT\Puget Sound Energy, Inc\Drafts\16062 PSANI MOA Financial Terms And Conditions.Doc)

Comment [tmv5502]: I'd suggest including the Finance ppl that are in charge of managing the funds associated with this Agreement

DRAFT

From: Timberman,Toni L (BPA) - TSE-TPP-2
To: Gibson,Paula L (BPA) - TSES-TPP-2
Subject: RE: Letter Agreements for PSANI MOA
Date: Monday, August 18, 2014 1:19:00 PM

Check with Barry

-----Original Message-----
From: Gibson,Paula L (BPA) - TSES-TPP-2
Sent: Monday, August 18, 2014 1:12 PM
To: Timberman,Toni L (BPA) - TSE-TPP-2
Subject: RE: Letter Agreements for PSANI MOA

Do you want to get rid of the CONCUR line?

-----Original Message-----
From: Timberman,Toni L (BPA) - TSE-TPP-2
Sent: Monday, August 18, 2014 1:10 PM
To: Gibson,Paula L (BPA) - TSES-TPP-2
Subject: FW: Letter Agreements for PSANI MOA

Paula, please accept Tonya's comments in the letters, save and e-mail back to me.
Thanks,
Toni

-----Original Message-----
From: Van Cleave,Tonya M (BPA) - TPCC-TPP-4
Sent: Thursday, August 14, 2014 11:32 AM
To: Timberman,Toni L (BPA) - TSE-TPP-2
Cc: Gibson,Paula L (BPA) - TSES-TPP-2; Chan,Allen C (BPA) - LT-7; Jusupovic,Jana D (BPA) - TPC-TPP-4
Subject: FW: Letter Agreements for PSANI MOA

Toni, here are my suggested changes. It looks like Dena/Jana will be in touch with you regarding the Financial document, so I didn't make too many changes to that one.

-----Original Message-----
From: Timberman,Toni L (BPA) - TSE-TPP-2
Sent: Tuesday, August 12, 2014 4:09 PM
To: Adams,Hub V (BPA) - LN-7; Moffett,Justin T (BPA) - KEC-4; Marleau,Michael L (BPA) - TEP-TPP-1; Jusupovic,Jana D (BPA) - TPC-TPP-4; Van Cleave,Tonya M (BPA) - TPCC-TPP-4; Fiedler,Paul A (BPA) - TPCV-TPP-4; Chan,Allen C (BPA) - LT-7
Cc: Gibson,Paula L (BPA) - TSES-TPP-2; Bennett,Barry (BPA) - LT-7
Subject: Letter Agreements for PSANI MOA

Attached are the latest drafts of the letter agreements to clarify the PSANI MOA. Note that Jana is still working on 16062 to clarify how $$ will change hands, so that one is still very draft.

Please let me know if you have comments on the other three. I am still working on scheduling a meeting with Hardev to get his approval to proceed with these agreements.

I have attached the PSANI MOA for your convenience.

Thanks,
Toni

Contract No. 11TX-15450

MEMORANUDUM OF AGREEMENT

executed by the

UNITED STATES OF AMERICA

DEPARTMENT OF ENERGY

acting by and through the

BONNEVILLE POWER ADMINISTRATION

and

THE CITY OF SEATTLE

acting by and through its

CITY LIGHT DEPARTMENT

and

PUGET SOUND ENERGY, INC.

(Relating to the Preferred Puget Sound Area Plan of Service Projects and Cost Allocation)

This MEMORANDUM OF AGREEMENT (MOA) is executed by the UNITED STATES OF AMERICA, Department of Energy, acting by and through the BONNEVILLE POWER ADMINISTRATION (BPA), THE CITY OF SEATTLE, acting by and through its CITY LIGHT DEPARTMENT (Seattle City Light), and PUGET SOUND ENERGY INC. (Puget). BPA, Seattle City Light, and Puget are sometimes referred to individually as "Party" and collectively as "Parties".

WHEREAS, BPA owns and is responsible for the reliable operation of the Federal Columbia River Transmission System (FCRTS),

WHEREAS, Seattle City Light and Puget each own and operate electric systems that are interconnected with the FCRTS in the Puget Sound Area and electric power is delivered within those electric systems, and to or from them by BPA over the FCRTS,

WHEREAS, the Puget Sound Area experiences periods of transmission congestion that may require mitigation to maintain reliable operation of the Puget Sound Area Interconnection, including in some cases, curtailments of firm transmission service,

WHEREAS, as of February 2011, the Parties entered into Contract No. 11TX-15290, "Temporary Operational Support Program Agreement," that provides for voluntary changes in planned generation, including an increase in Puget Sound Area generation, as temporary and short-term measures for relieving forecasted transmission congestion conditions that are expected to adversely affect the reliable operation of the Puget Sound Area Interconnection,

WHEREAS, representatives from each of the Parties and other entities participated in regional studies to develop a long term plan, and implement a range of physical improvements to preserve the reliable operation of the Puget Sound Area interconnection, and reduce the need to curtail firm transmission service,

WHEREAS, the Parties have identified the projects described herein that, when taken as a whole, are expected to preserve the reliable operation of the Puget Sound Area Interconnection, and reduce the need to curtail firm transmission service; and it is in their individual and collective interests to continue to support the efforts needed to carry out these projects, and

WHEREAS, the transmission congestion affecting the Puget Sound Area interconnection is a shared problem, and the projects and cost sharing arrangements provided herein are appropriate.

NOW THEREFORE, in consideration of the mutual obligations and undertakings herein, the sufficiency of which is acknowledged, the Parties agree as follows:

1. DEFINITIONS

(a) "Bothell to SnoKing Reconductor Project" means the project identified in the Preferred Plan of Service in which Seattle City Light will reconductor the existing Bothell to SnoKing No. 1 and No. 2 230 kV lines with high-temperature conductor.

(b) "BPA Preferred Plan Projects" means, collectively, the Covington 500 kV Transformer Addition Project and the Northern Intertie Remedial Action Scheme ("RAS") Improvement Project.

(c) "Broad Street Inductor Project" means the project identified in the Preferred Plan of Service in which Seattle City Light will add series inductors (up to 10 ohm) to the Massachusetts-Broad Street 115 kV line.

(d) "ColumbiaGrid" means the Washington non-profit membership corporation formed to improve the operational efficiency, reliability, and planned expansion of the Pacific Northwest transmission grid, the

eight members of which, as of the Effective Date, are Avista Corporation; BPA; Public Utility District No. 1 of Chelan County, Washington; Public Utility District No. 2 of Grant County, Washington; Puget; Seattle City Light; Public Utility District No. 1 of Snohomish County, Washington; and Tacoma Power.

(e) "Covington 500 kV Transformer Addition Project" means the project identified in the Preferred Plan of Service in which BPA will install a third 500–230 kV transformer at the BPA Covington Substation.

(f) "Delridge to Duwamish Reconductor Project" means the project identified in the Preferred Plan of Service in which Seattle City Light will reconductor the existing Delridge to Duwamish 230 kV line with high-temperature conductor.

(g) "Lakeside 230 kV Transformer Addition Project" means the project identified in the Preferred Plan of Service in which Puget will install a 230–115 kV transformer at the Puget Lakeside Substation.

(h) "Maple Valley to SnoKing Reconductor Project" means the project identified in the Preferred Plan of Service in which Seattle City Light will reconductor the existing Maple Valley to SnoKing 230 kV line with high-temperature conductor.

(i) "North Downtown Inductor Project" means the project identified in the Preferred Plan of Service in which Seattle City Light will add series inductors (up to 10 ohm) to the East Pine-Broad Street line as part of Seattle City Light's North Downtown Substation Project.

(j) "Northern Intertie RAS Improvement Project" means the project identified in the Preferred Plan of Service in which BPA will install new software for and re-wire electrical protection devices on the Northern Intertie RAS.

(k) "Northern Intertie RAS" means the existing BPA pre-programmed set of automatic operating steps that are designed to protect the regional high voltage electric grid in the event of a loss of one of the two Custer-Monroe 500 kV lines.

(l) "Preferred Plan of Service" means the "Updated Recommended Transmission Expansion Plan for the Puget Sound Area to Support Winter South-to-North Transfers" approved by ColumbiaGrid on October 28, 2011, a copy of which is attached as Exhibit A to this MOA.

(m) "Preferred Plan Projects" means, collectively, the BPA Preferred Plan Projects, the Puget Preferred Plan Projects, and the Seattle City Light Preferred Plan Projects.

(n) "Puget Preferred Plan Projects" means the Sammamish to Lakeside to Talbot Rebuild Project and the Lakeside 230 kV Transformer Addition Project.

(o) "Sammamish to Lakeside to Talbot Rebuild Project" means the project identified in the Preferred Plan of Service in which Puget will upgrade Puget's existing Sammamish to Lakeside to Talbot 115 kV lines to 230 kV operation using Puget's existing Sammamish to Lakeside to Talbot utility corridor.

(p) "Seattle City Light Preferred Plan Projects" means the Bothell to SnoKing Reconductor Project, the Broad Street Inductor Project, the North Downtown Inductor Project, and the Delridge to Duwamish Reconductor Project.

2. TERM

The term of this MOA shall be effective on the date of execution by all Parties (Effective Date) and shall continue until the earliest to occur of the following: (i) the date of completion of the last of the Preferred Plan Projects; (ii) a Party terminates this MOA pursuant to section 5(c) of this MOA; or (iii) December 31, 2020.

3. PREFERRED PLAN OF SERVICE PROJECTED PROJECT COMPLETION SCHEDULE AND COST

(a) **BPA Preferred Plan Projects**. Each Party acknowledges that, as of the Effective Date, the projected project completions schedule and capital costs of the BPA Preferred Plan Projects are as follows:

BPA Preferred Plan Project	Projected Completion	Projected Capital Cost
1. Covington 500 kV Transformer Addition Project	2018	$56.2 million
2. Northern Intertie RAS Improvement Project	2014	$4.0 million

(b) **Puget Preferred Plan Projects.** Each Party acknowledges that, as of the Effective Date, the projected project completions schedule and capital costs of the Puget Preferred Plan Projects are as follows:

Puget Preferred Plan Project	Projected Completion	Projected Capital Cost
1. Sammamish to Lakeside to Talbot Rebuild Project	2017	$45.0 million (single circuit) or $41.3 million (double circuit)
2. Lakeside 230 kV Transformer Addition Project	2017	$22.0 million

(c) **Seattle City Light Preferred Plan Projects.** Each Party acknowledges that, as of the Effective Date, the projected project completions schedule and capital costs of the Seattle City Light Preferred Plan Projects are as follows:

Seattle City Light Preferred Plan Project	Projected Completion	Projected Capital Cost
1. Bothell to SnoKing Reconductor Project	2017	$2.5 million
2. Broad Street Inductor Project	2017	$7.3 million*
3. North Downtown Inductor Project	2017	$4.4 million*
4. Delridge to Duwamish Reconductor Project	2016	$1.9 million

(d) **Preferred Plan Project Not Planned for Construction Based On the Construction of the Puget Preferred Plan Projects.** Each Party acknowledges that, the construction of the Puget Preferred Plan Projects negates the need for the construction of the Maple Valley to

* The projected capital costs of the Broad Street Inductor Project and the North Downtown Inductor Project do not reflect any projected costs for land acquisition. As of the Effective Date, the Parties acknowledge that Seattle City Light may have to acquire land to accomplish the Broad Street Inductor Project, and the actual capital costs of the Broad Street Inductor Project will, if necessary, reflect the actual costs of land acquisition for such project. As of the Effective Date, the Parties do not anticipate that the North Downtown Inductor Project will require Seattle City Light to acquire any land.

SnoKing Reconductor Project. Each Party acknowledges that, as of the Effective Date, the projected project completions schedule and capital costs of the Maple Valley to SnoKing Reconductor Project are as follows:

Preferred Plan Project	Projected Completion	Projected Capital Cost
Maple Valley to SnoKing Reconductor Project	N/A	$16.1 million

4. PRELIMINARY CAPITAL COST ALLOCATION

As of the Effective Date of this MOA, the Parties agree to share in the capital costs of Preferred Plan Projects as follows:

(a) **BPA Preferred Plan Projects**. BPA shall pay the entire actual capital cost of each of (i) the Covington 500 kV Transformer Addition Project and (ii) the Northern Intertie RAS Improvement Project

(b) **Seattle City Light Preferred Plan Projects.** BPA, Puget, and Seattle City Light shall each pay one-third of the total actual capital cost of each of (i) the Bothell to SnoKing Reconductor Project; (ii) the Delridge to Duwamish Reconductor Project; (iii) the Broad Street Inductor Project; and (iv) the North Downtown Inductor Project.

(c) **Puget Preferred Plan Projects.** BPA and Seattle City Light shall each pay to Puget an amount equal to one-third of the adjusted projected capital cost of the Maple Valley to SnoKing Reconductor Project, which adjusted projected capital cost shall be determined as provided in the following table:

Projected Capital Cost of the Maple Valley to SnoKing Reconductor Project	=	$16.1 million * Cost Differences in Reconductor Projects

where:

Cost Differences in Reconductor Projects	=	the quotient of

(i) the sum of the actual capital costs of the Delridge to Duwamish Reconductor Project and Bothell to SnoKing Reconductor Project and

(ii) the sum of the projected capital costs of the Delridge to Duwamish Reconductor Project and Bothell to SnoKing Reconductor Project identified in section 3(c) above (i.e., $4.4 million)

5. FINAL CAPITAL COST ALLOCATION AND OPTION OF ELECTION TO CANCEL

(a) The allocations identified in section 4 are based on preliminary planning capital cost projections. The final capital cost allocation for the Seattle City Light Preferred Plan Projects shall be based on actual design and construction capital costs for each of the Seattle City Light Preferred Plan Projects, and the final capital cost allocation for the Puget Preferred Plan Projects shall be in accordance with the formula proscribed in section 4(a) above. The Parties shall review such actual design and construction capital costs and schedules and shall agree in writing to the final capital cost allocation.

(b) Each Party reserves the right to cancel any Preferred Plan Project for which such Party is the sponsor if such Party determines that

(i) the actual capital cost of such Preferred Plan Project is likely to exceed the projected capital cost of such Preferred Plan Project by a factor that is equal to or in excess of thirty percent (30%), or

(ii) the projected in-service date of the Preferred Plan Project will be more than twenty-four (24) months later than the projected completion date identified in section 3 above for such Preferred Plan Project.

If a Party elects to cancel a Preferred Plan Project for which such Party is a sponsor under this section 5(b), such Party shall provide written notice to such other Parties within five (5) days of such election. Within a reasonable period of time after receipt of such written notice, representatives of the Parties shall convene and identify alternative projects that the Parties expect will preserve the reliable operation of the Puget Sound Area Interconnection and reduce the need to curtail firm transmission service in a manner similar to the project cancelled pursuant to section 5(b). If the Parties cannot agree in good faith upon an alternative project to replace a project cancelled pursuant to section 5(b) within a reasonable period following receipt of written notice of

such termination, then any Party may terminate this MOA upon 90 days' written notice to the other Parties.

6. RESPONSIBILITY FOR ALL OTHER COSTS

(a) Each Party shall be solely responsible for the Preferred Plan Project for which such Party is the sponsor, less the contributions from the other Parties as provided in section 4. This MOA only affects the cost sharing for the Preferred Plan Projects.

(b) Each Party shall own the assets for the Preferred Plan Project for which such Party is the sponsor and shall be solely responsible for the operation and maintenance costs of such assets. Each Party shall be entitled to any capacity increases to its transmission system that results from any assets installed pursuant to this MOA.

(c) If any Party enhances a Preferred Plan Project after completion of such Preferred Plan Project to meet such Party's needs, the cost of such future enhancements shall be borne solely by such Party. Each Party shall attempt in good faith to coordinate with the other Parties with respect to any future enhancements to a Preferred Plan Project to minimize or eliminate any impact to the interconnected electric systems of such other Parties.

7. PAYMENT SCHEDULE

Payments will be made at the completion of individual projects. The Parties shall agree in writing to the method and schedule for the cost share contributions to be made under this MOA.

8. NATIONAL ENVIRONMENTAL POLICY ACT ASSESSMENT

To the extent that BPA's financial contributions under this MOA are determined to trigger the need for analysis of projects under the National Environmental Policy Act, the Parties shall coordinate such assessment.

9. JOINT COMMUNICATIONS

The Parties shall coordinate joint communications regarding presentations of the preferred plan of service to the public.

10. GENERAL PROVISIONS

(a) This MOA, including documents expressly incorporated by reference, constitutes the entire agreement between the Parties. It supersedes all previous communications, representations, or contracts, either written or oral, which purport to describe or embody the subject matter of this MOA.

(b) No amendment of this MOA shall be of any force or effect unless set forth in a written instrument signed by authorized representatives of each Party.

(c) This MOA is made and entered into for the sole benefit of the Parties, and the Parties intend that no other person or entity shall be a direct or indirect beneficiary of this MOA.

(d) This MOA shall be interpreted consistent with and governed by federal law.

(e) In the event that any provision of this MOA is determined to be invalid or unenforceable for any reason, in whole or part, the remaining provisions of this MOA shall be unaffected thereby and shall remain in full force and effect to the fullest extent permitted by law, and such invalid or unenforceable provision shall be replaced by the Parties with a provision that is valid and enforceable and that comes closest to expressing the Parties' intention with respect to such invalid or unenforceable provision.

(f) Each Party shall be solely responsible for and shall pay its own costs and expenses incurred by it in connection with the negotiation of this MOA.

(g) Whenever this MOA requires or provides that (i) a notice be given by a Party to any other Party or (ii) a Party's action requires the approval or consent of any other Party, such notice, consent or approval shall be given in writing and shall be given in accordance with the provisions of Exhibit B to this MOA.

(h) This MOA is binding on any successors and assigns of the Parties. No Party may otherwise transfer or assign this MOA, in whole or in part, without the other Parties' written consent. Such consent shall not be unreasonably withheld.

(i) Nothing contained in this MOA shall be construed as creating a corporation, company, partnership, association, joint venture or other entity, nor shall anything contained in this MOA be construed as

creating or requiring any fiduciary relationship between the Parties. No Party shall be responsible hereunder for the acts or omissions of any other Party. Nothing herein shall preclude (i) a Party from taking any action (or having its affiliates take any action) with respect to any other transmission project, including any such project that may compete with the projects provided herein, or (ii) the Parties jointly from entering into MOAs with third parties for the joint development, construction, ownership or operation of any project or for the provision of transmission capacity from such project.

(j) Other than the obligation to pay amounts due under Section 4, in no event shall any Party be liable to any other Party under any provision of this MOA for any losses, damages, costs or expenses for any direct, special, indirect, incidental, consequential, or punitive damages, including but not limited to loss of profit or revenue, whether based in whole or in part in contract or in tort, including negligence, strict liability, or any other theory of liability; provided, however, that damages for which a Party may be liable to any other Party under another agreement will not be considered to be special, indirect, incidental, or consequential damages hereunder.

(k) The Parties shall not be in breach of their respective obligations to the extent the failure to fulfill any obligation is due to an Uncontrollable Force. "Uncontrollable Force" means an event beyond the reasonable control of, and without the fault or negligence of, the Party claiming the Uncontrollable Force, that prevents that Party from performing its contractual obligations under this MOA and which, by exercise of that party's reasonable care, diligence and foresight, such Party was unable to avoid. Uncontrollable Forces include, but are not limited to:

(1) strikes or work stoppage;

(2) floods, earthquakes, or other natural disasters; terrorist acts; and

(3) final orders or injunctions issued by a court or regulatory body having competent subject matter jurisdiction which the Party claiming the Uncontrollable Force, after diligent efforts, was unable to have stayed, suspended, or set aside pending review by a court of competent subject matter jurisdiction.

Neither the unavailability of funds or financing, nor conditions of national or local economies or markets shall be considered an Uncontrollable Force. The economic hardship of a Party shall not

constitute an Uncontrollable Force. Nothing contained in this provision shall be construed to require any Party to settle any strike or labor dispute in which it may be involved.

If an Uncontrollable Force prevents a Party from performing any of its obligations under this MOA, such party shall: (1) immediately notify the other Parties of such Uncontrollable Force by any means practicable and confirm such notice in writing as soon as reasonably practicable; (2) use its best efforts to mitigate the effects of such Uncontrollable Force, remedy its inability to perform, and resume full performance of its obligation hereunder as soon as reasonably practicable; (3) keep the other Parties apprised of such efforts on an ongoing basis; and (4) provide written notice of the resumption of performance. Written notices sent under this section 10(k) must comply with Exhibit B, Notices and Contact Information.

11. WAIVER

No waiver of any provision or breach of this MOA shall be effective unless such waiver is in writing and signed by the waiving Party, and any such waiver shall not be deemed a waiver of any other provision of this MOA or any other breach of this MOA.

12. SIGNATURE

The Parties have caused this MOA to be executed as of the latest date all Parties have signed this MOA.

CITY OF SEATTLE CITY LIGHT DEPARTMENT		UNITED STATES OF AMERICA Department of Energy Bonneville Power Administration	
By:	Jorge Carrasco	By:	Harder Juj
Name: *(Print/ Type)*	Jorge Carrasco	Name: *(Print/ Type)*	Harder Juj
Title:	Superintendent	Title:	VP, Planning + Asset Mgmt.
Date:	1/31/12	Date:	1/31/12

PUGET SOUND ENERGY, INC.

By: Susan McLain

Name: Susan McLain
(Print/ Type)

Title: Senior Vice President Delivery Operations

Date: 1/31/12

EXHIBIT A
PREFERRED PLAN OF SERVICE

EXHIBIT B
NOTICES

Any notice required under this MOA shall be in writing and shall be delivered in person; or with proof of receipt by a nationally recognized delivery service or by United States Certified Mail. Notices are effective when received. Either Party may change the name or address for receipt of notice by providing notice of such change. The Parties shall deliver notices to the following person and address:

If to Seattle City Light:

Attention:
Phone:
Fax:
Email:

If by First Class Mail:

City of Seattle, City Light Department
(Customer Address)
(Customer City, State, Zip)

If by Overnight Delivery Service:
City of Seattle, City Light Department
(Customer Address)
(Customer City, State, Zip)

If to BPA:

Attention:
Phone:
Fax:
Email:

If by First Class Mail:

Bonneville Power Administration
P.O. Box 61409
Vancouver, WA 98666-1409

If by Overnight Delivery Service:
Bonneville Power Administration – TSE/TPP-2
7500 NE 41st Street – Suite 130
Vancouver, WA 98662

If to the Puget:

Attention:
Phone:
Fax:
Email:

If by First Class Mail:

Puget Sound Energy, Inc.
P.O. Box 97034
Bellevue, WA 98009-9734

If by Overnight Delivery Service:
Puget Sound Energy, Inc.
10885 N.E. 4th Street, Suite 1100
Bellevue, WA 98004-5591

EXHIBIT A
PREFERRED PLAN OF SERVICE

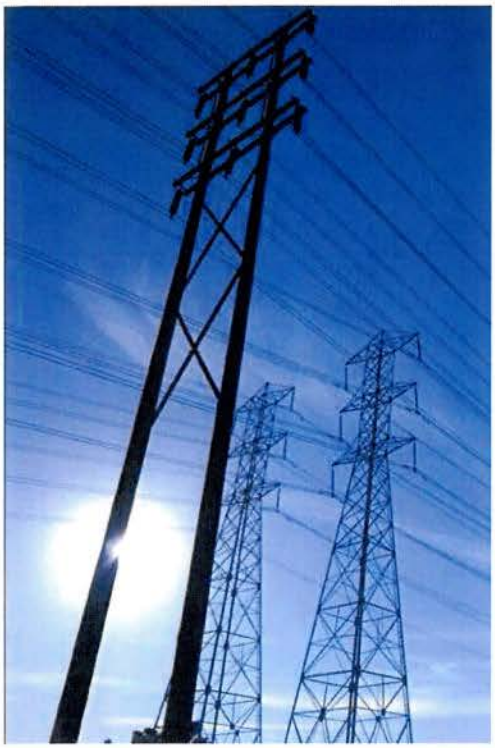

Updated Recommended Transmission Expansion Plan for the Puget Sound Area to Support Winter South-to-North Transfers

ColumbiaGrid

Puget Sound Area Study Team

Bonneville Power Administration, Puget Sound Energy, Seattle City Light, Snohomish County PUD, Tacoma Power, Powerex

Provisional Approval by the Study Team on April 25, 2011

Final Approval by the Study Team on October 28, 2011

Introduction and Conclusions

In October of 2010, the Puget Sound Area Study Team issued a report entitled "Transmission Expansion Plan for the Puget Sound Area." The report is available via the ColumbiaGrid website. The report details a transmission plan for the Puget Sound region that would, as a basic requirement, provides for reliable system performance while significantly improving the ability of the transmission grid to support power transfers between the Northwest and British Columbia. Since the release of the original report, the following changes have occurred that have led to the need for the Puget Sound Area Study Team to revise their transmission plan:

1) ***Additional scenarios*** – The Puget Sound area utilities have been meeting regularly since the publication of the original report in October 2010 and have developed several additional scenarios to be studied (e.g., the addition of a new Broad Street-Massachusetts 115 kV underground cable). In response, the study team repeated their prior analysis for the critical winter south-to-north condition for the new scenarios. The results of this analysis are shown in the table provided in Appendix A.

2) ***Increased likelihood that Puget Sound Energy will move forward with Sammamish-Lakeside-Talbot project*** – Since the development of the original plan, Puget Sound Energy has further developed their plan to rebuild two 115 kV lines to 230 kV (Sammamish-Lakeside-Talbot #1 and #2) and provide new 230/115 kV transformation at their Lakeside Substation. Although both lines will be rebuilt, only one of the lines may be initially energized at 230 kV. As stated in the prior report, this facility addition can delay the need to reconductor the Maple Valley-SnoKing 230 kV lines beyond the ten-year transmission planning horizon.

   The study team decided that since Puget Sound Energy is moving forward with this plan, the Sammamish-Lakeside-Talbot project should be listed as the proposed project in the plan instead of the Maple Valley-SnoKing reconductor. This project will give Puget Sound Energy the ability to provide necessary load support at Lakeside which cannot be achieved with the Maple Valley-SnoKing reconductor project, while providing similar Transmission Curtailment Risk Measure (TCRM) benefits as the Maple Valley-SnoKing reconductor project. A downside of the Sammamish-Lakeside-Talbot project is that its south-to-north Total Transfer Capability (TTC) is lower as compared to the Maple Valley-SnoKing reconductor. However, the Sammamish-Lakeside-Talbot project has additional benefits over the Maple Valley-SnoKing reconductor project in that it provides an additional 230 kV transmission path through the Puget Sound area and makes it feasible to reconductor rather than rebuild the Bothell-SnoKing 230 kV lines.

3) ***Increased likelihood that Seattle City Light will move forward with their North Downtown Substation Project*** – Since the development of the plan, Seattle City Light has indicated that plans to add a new North Downtown Substation have become more likely. The final plan is still being developed by SCL. The option studied includes a new underground cable (North Downtown-Massachusetts 230 kV), a new 115 kV line between North Downtown and Canal, and two 230/115 kV transformers at the proposed substation (see the following Figure One). This project was studied in the prior plan and, as identified previously, a third set of series inductors will be required on the new Canal-North Downtown 115 kV line with the addition of the North Downtown Substation. The plan for the system without, or prior to, the addition of the North Downtown Substation remains the same (adding series inductors on the two 115 kV underground cables). There is not a significant impact on the plan with or without the North Downtown Substation project as long as the project includes a third set of series inductors on the new North Downtown-Canal 115 kV line.

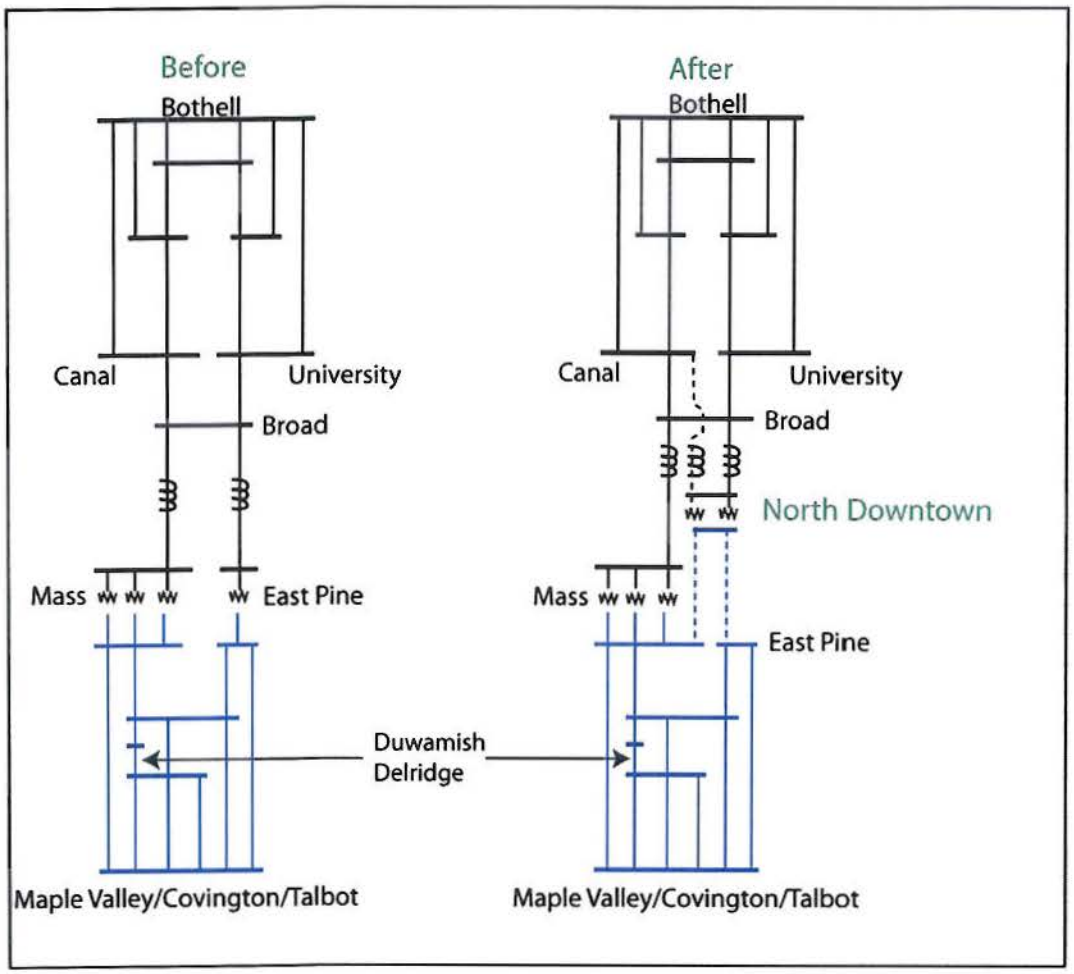

Figure One: One-Line Diagram with the proposed locations of the series inductor additions, before and after the Seattle City Light North Downtown Substation Project.

4) ***Seattle area line rating increases*** – Several key transmission lines in the region have been rerated to a higher capability. In some cases the new ratings provide a 77% increase over the ratings that were utilized in the original study. This has enabled the study team to reduce the size of the series inductors (from 26 ohms to 6 ohms) that were proposed for the Seattle City Light 115 kV transmission lines and cables. The smaller inductors lead to more power flowing through the Seattle City Light system resulting in the need to include an additional facility reconductor in the plan; the Duwamish-Delridge 230 kV line. The cost of this additional reconductor is estimated to be relatively low ($1.6 million). This additional cost is projected to be partially offset by the savings achieved by the installation of smaller inductors. The smaller inductors also reduce the need to add shunt capacitors to offset the reactive losses from the larger sized inductors.

5) ***Seattle City Light Update to TPS Settings*** - Seattle City Light has recently updated the TPS settings which have resulted in operational changes that preclude it from being used as a project in this study to reduce TCRM and increase TTC levels on the northern intertie. All results that use the previous scheme have not been included in this report.

As a result of the above changes, the plan to support south-to-north transfers has been revised as specified in this report. Additional transmission facilities, such as a second Portal Way 230/115 kV transformer, will likely be necessary to support north-to-south transfers. These additional facilities will be further analyzed in subsequent studies.

Overview of Revised Plan

As a result of the above changes, the Transmission Expansion Plan for the Puget Sound Area was revised and the new plan is shown in the following Figure Two:

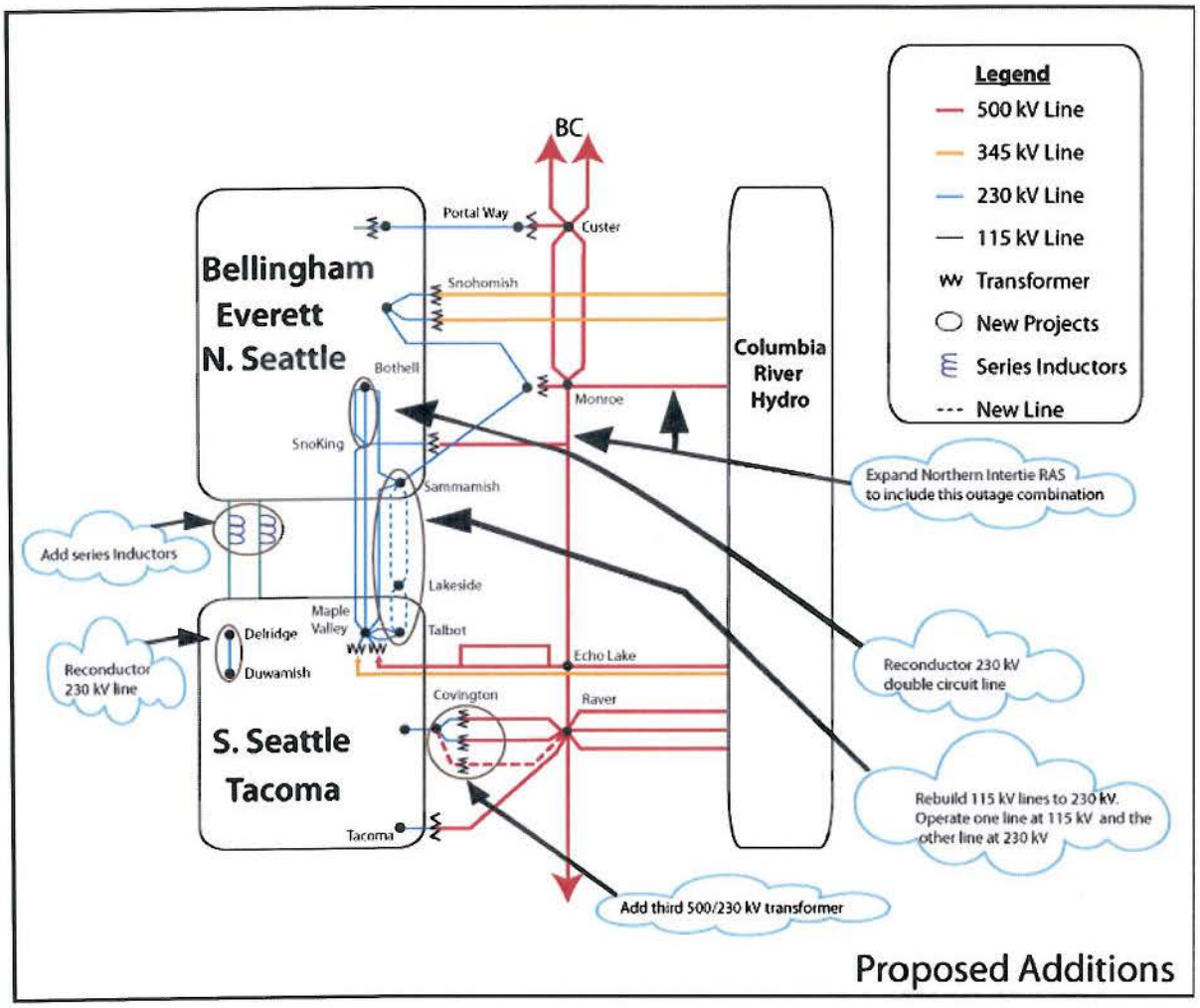

Figure Two: Revised Puget Sound Area Transmission Expansion Plan for Supporting South-to-North Transfers

Projects included in the Puget Sound Area Transmission Expansion Plan to support south-to-north transfers are:

- Reconductor the double circuit Bothell-SnoKing 230 kV lines with high temperature conductor
- Expand the Northern Intertie RAS
- Add a third Covington 500/230 kV transformer
- Reconductor the Delridge-Duwamish 230 kV line
- Add series inductors to the Massachusetts-Union-Broad and East Pine-Broad 115 kV lines in the downtown Seattle system. The final inductor size is under study and may vary from the 6 ohms specified in this report. Each line may have a different inductor size to optimize the system.
- Rebuild both the Sammamish-Lakeside-Talbot 115 kV lines to 230 kV. Energize one line at 230 kV and the other at 115 kV.

The cost estimates for the project in the preferred plan are shown in the following table. It should be noted that portions of the projects may be planned for local utility service and may not be necessary to accomplish the transfer capability goals of this study.

PSAST Preferred South-to-North Plan Cost Estimate	
	Cost Estimate (M)
Reconductor Bothell-SnoKing 230kV #1 & #2 with high temperature conductor	$3
Extend the Northern Intertie RAS to trip for the combined outage of the Chief Joseph-Monroe and Monroe-SnoKing-Echo Lake 500 kV lines	$3
Add a third Covington 500/230 kV transformer, a 500 kV terminal at Raver for the third Raver-Covington 500 kV line, and a 500 kV Bus at Covington	$60
Reconductor Delridge - Duwamish 230 kV Line with high temperature conductor	$2
6 ohm inductors on the two 115 kV cables out of SCL's Broad Street Substation	$13
Lakeside 230/115 kV transformer, rebuild both 115 kV Sammamish – Talbot lines to 230 kV energizing one line at 230 kV	$65
Total Preferred Projects	$146

* The majority of these estimates are preliminary estimates. More detailed estimates will be developed by the Puget Sound Area utilities.

Next Steps

Now that the overall south-to-north plan is complete, the individual transmission owners need to identify the parties responsible for each of the projects and agree on the cost allocation for the projects. After this has been completed, detailed feasibility studies, cost estimates, project timing, and schedules will be completed. In addition, the following project specific studies will be completed by the Puget Sound Area Study Team:

- North-to-South transfer conditions will be studied to determine the effect that the new preferred plan has on transfer capability and to determine if any additional projects are needed.
- Series Inductor Project: Studies need to be completed to determine the proper size for the series inductors, the impact on north-to-south transfers, and the preferred switching arrangement.
- Determine how long the proposed plan will last. The PSAST will grow the Northwest loads in the current 2020 base case to 2025 and 2030 load levels. The additional load will be served by eastern resources. TCRM and TTC values will be calculated to determine whether they may degrade over time.
- Northern Intertie RAS Expansion Project: The Puget Sound Area Study Team will be available to assist BPA and BC Hydro with any additional studies necessary to implement this RAS expansion.
- Covington Transformer Project: Additional studies will be completed by BPA, to further analyze alternative locations for this transformer addition, the need for a 500 kV switchyard at Covington, potential operational solutions, potential remedial action schemes, the size of the transformer, the impedance of the transformer, and the preferred connection to the 230 kV bus. The BPA studies will be coordinated with area utilities through the Puget Sound Area Study Team.

While the projects identified in this report improve the transfer capability through the Puget Sound Area, there remain curtailment risks for firm transfers during outage conditions (N-1-X). Consequently, the Puget Sound Area Study Team will continue to investigate cost effective ways to reduce the risk of firm curtailments.

Study Results

New winter south-to-north studies were completed for a variety of scenarios and the detailed study results are provided in Appendix A. The system performance for each scenario was compared using the following two measures in addition to cost and permitting feasibility:

1) ***Transmission Curtailment Risk Measure (TCRM):*** TCRM is a measure of the likelihood of experiencing curtailments of transfers between the Northwest and British Columbia. The higher the TCRM value the greater the exposure to curtailments. The TCRM analysis

includes the cases with all facilities in service as well as with any single facility out of service. A detailed description of the TCRM methodology is provided in the original report. In the original report, winter and summer conditions for both north-to-south and south-to-north transfers were studied. For this update, only winter conditions with south-to-north transfers were studied as that is the critical system state for the alternatives presented in this report.

2) ***Total Transfer Capability (TTC):*** The TTC (thermal only) of the Westside Northern Intertie (WSNI) was calculated for each of the options in the traditional way, with all lines in service. Only the winter south-to-north condition was studied, with 680 MW of generation operating in the Puget Sound Area. The specific generation unit assumptions are as described in Appendix J of the original report. Puget Sound Area generation during winter peak is between 950 MW and 1550 MW 80% of the time (when load has been greater than 6000MW along with temperature below 32 degrees F). With higher levels of Puget Sound Area generation, the TTC numbers shown in the tables would likely increase.

The major issues addressed in this study are the impacts of the various alternatives on the 115 kV system in the Seattle area, and the impacts of the various alternatives on the 230 kV system between the Maple Valley and SnoKing areas. In all cases, the other major projects as described in the original report are modeled, which include the Northern Intertie RAS expansion, third Covington transformer, and second Portal Way transformer. In addition, the Bothell-SnoKing rebuild project was included in most scenarios although sensitivity studies were conducted for the reconductor option which ended up being the preferred option. Provided below is a discussion of each of the major issues addressed by the study team and their conclusions.

1) 26 ohm versus 6 ohm series inductors

Table 1: Selected TCRM and TTC Results, 26 ohm inductors vs. 6 ohm inductors

Study #	Series Inductors on SCL's 115 kV Cables- 26 ohms	Series Inductors on SCL's 115 kV Cables- 6 ohms	Maple Valley-SnoKing High Temp	PSE's Sammamish - Lakeside - Talbot 115kV to 230kV Upgrade Project (Two Lines Operated at 230 kV)	Total TCRM - Without TCRM Lines Outside of the Puget Sound Area	Winter South North WSNI Thermal TTC at 680 MW Puget Sound Generation
3	X		X		10,304	2,270
4		X	X		8,433	2,297
17	X			X	10,460	1,773
18		X		X	8,666	2,038

With the changes in 115 kV line ratings, the Seattle 115 kV system is capable of accommodating greater flows. As a result, using a series inductor impedance greater than 6 ohms is no longer necessary to reduce the loadings on the Seattle 115 kV system. In fact, the TCRM is slightly better (lower) with the smaller 6 ohm inductors. Prior studies have also indicated that the smaller inductor size provided better results for summer north-to-south conditions. Higher impedance inductors also would have the undesirable effect of pushing more power over to the Maple Valley-SnoKing lines and reducing the TTC. In addition the smaller inductors require the addition of fewer shunt capacitors to offset the reactive losses from the inductors. The 6 ohm inductors have the effect of adding a circuit reactance that is equivalent to 8 miles of overhead 115 kV line. The 6 ohm inductors are now the preferred 115 kV project due to better performance and lower cost.

2) 6 ohm series inductors versus phase shifting transformers

Table 2: 6 ohm series inductors versus phase shifting transformers

Study #	SCL Phase Shifting Transformer	Series Inductors on SCL's 115 kV Cables- 6 ohms	Maple Valley-SnoKing High Temp	PSE's Sammamish - Lakeside - Talbot 115kV to 230kV Upgrade Project (Two Lines Operated at 230 kV)	Total TCRM - Without TCRM Lines Outside of the Puget Sound Area	Winter South North WSNI Thermal TTC at 680 MW Puget Sound Generation
1	X		X		13,122	2,455
4		X	X		8,433	2,297
15	X			X	11,500	2,136
18		X		X	8,666	2,038

The TCRM studies for the phase shifting transformer project may not reflect the true performance of this project due to the difficulty of accurately modeling the phase shifting transformer operating strategy. As a result, while the TCRM studies show poorer performance for the phase shifting transformers than for the series inductor project, the study team believes that this result is a shortcoming of the phase shifter modeling and, in fact, the phase shifters should perform as well or better than the series inductors. This was the conclusion of the TTC studies, where a benefit was observed when using the phase shifting transformers instead of fixed series inductors. However, as the incremental benefits are not believed to be sufficient to justify the higher capital and maintenance costs of the phase shifter option, the 6 ohm series inductors remain the recommended project.

3) 6 ohm series inductors versus adding a third 115 kV cable

Table 3: 6 ohm inductor versus adding a third 115 kV cable

Study #	Series Inductors on SCL's 115 kV Cables- 6 ohms	3rd 115 kV Underground Cable from Mass to Broad Street & Mass Bank 1 Energized	Maple Valley-SnoKing High Temp	PSE's Sammamish - Lakeside - Talbot 115kV to 230kV Upgrade Project (Two Lines Operated at 230 kV)	Total TCRM - Without TCRM Lines Outside of the Puget Sound Area	Winter South North WSNI Thermal TTC at 680 MW Puget Sound Generation
4	X		X		8,433	2,297
5		X	X		19,027	1,513
18	X			X	8,666	2,038
19		X		X	11,213	2,297

This option examines adding a third Seattle City Light 115 kV underground cable (a second cable from Broad Street to Massachusetts) in place of the 6 ohm inductors. The results for this alternative vary depending on whether the Sammamish-Lakeside-Talbot lines are upgraded to 230 kV or the Maple Valley-SnoKing lines are reconductored. With the preferred plan (upgrading the Sammamish-Lakeside-Talbot lines to 230 kV), there is a benefit to the alternative of adding a third cable from a TTC perspective and a slight benefit to the series inductor option from the TCRM perspective. Conversely, if the Maple Valley-SnoKing reconductor project moves forward, the series inductor option performs better from both a TCRM and TTC perspective. This is because if a third cable is added, there is still a need for the series inductors to eliminate overloading on the Broad Street-East Pine 115 kV cable, the East Pine-Maple Valley 230 kV line, and the Massachusetts 230/115 kV transformers. The third cable option is deemed to be less preferable to the recommended option primarily because the cost of the third cable is expected to far exceed the cost of the series inductors. In addition, the construction of an additional Broad-Massachusetts 115 kV cable is incompatible with Seattle City Light's future plan to add a new 230 kV cable as part of their North Downtown Substation

Project (North Downtown-Massachusetts 230 kV). The 6 ohm series inductors remain the preferred project due to better performance and lower cost.

4) ***6 Ohm Series inductors versus replacing cables***

Table 4: 6 ohm inductors versus replacing cables

Study #	Series Inductors on SCL's 115 kV Cables- 6 ohms	Replace SCL's Existing 115 kV Cables (no inductors)	Maple Valley-SnoKing High Temp	PSE's Sammamish - Lakeside - Talbot 115kV to 230kV Upgrade Project (Two Lines Operated at 230 kV)	Total TCRM - Without TCRM Lines Outside of the Puget Sound Area	Winter South North WSNI Thermal TTC at 680 MW Puget Sound Generation
4	X		X		8,433	2,297
6		X	X		19,398	1,602
18	X			X	8,666	2,038
20		X		X	11,746	2,210

If the 6 ohm inductors are in place, potential overloading on the cables is no longer an issue so rebuilding the cables would have no benefit. This option examines rebuilding the cables in lieu of the 6 ohm inductors. The results for this alternative vary depending on whether the Sammamish-Lakeside-Talbot lines are upgraded to 230 kV or the Maple Valley-SnoKing lines are reconductored. With the preferred plan (upgrading the Sammamish-Lakeside-Talbot lines to 230 kV), the series inductors perform better from a TCRM perspective and slightly worse from a TTC perspective. If the Maple Valley-SnoKing reconductor project moves forward then the series inductor option performs better from both a TCRM and TTC perspective. The TCRM performance is better for the series inductor options because if the cables are replaced, there would be other limits reached on the downtown Seattle system. The additional limits reached that account for most of the TCRM increase include the East Pine 230/115 kV transformer and the Massachusetts 230/115 kV transformers. The series inductors remain the preferred project due to better performance and lower cost.

5) 6 ohm *series inductors versus the Seattle City Light North Downtown Substation project with and without series inductors*

Table 5: 6 ohm inductors versus the Seattle City Light North Downtown Substation project with and without series inductors

Study #	Series Inductors on SCL's 115 kV Cables- 6 ohms	SCL's North Downtown Substation	SCL's North Downtown Substation (6 ohm inductors)	Maple Valley-SnoKing High Temp	PSE's Sammamish - Lakeside - Talbot 115kV to 230kV Upgrade Project (Two Lines Operated at 230 kV)	Total TCRM - Without TCRM Lines Outside of the Puget Sound Area	Winter South North WSNI Thermal TTC at 680 MW Puget Sound Generation
4	X			X		8,433	2,297
32		X		X		117,049	-1,380
36			X	X		8,778	2,672
18	X				X	8,666	2,038
34		X			X	38,594	-832
38			X		X	9,101	2,207

The study results indicate that the TCRM would increase dramatically and the TTC would be negative (not capable of south-to-north transfers) unless the series inductors are included in the plans for the new North Downtown Substation. The majority of this increase is due to overloading on the Broad-North Downtown 115 kV cable. As a result, the series inductors are needed before and after the addition of the North Downtown Substation Project.

6) **6 ohm series inductors:** ***Reinforcing Maple Valley–SnoKing 230 kV lines versus options to upgrade Sammamish-Lakeside-Talbot 115 kV lines versus Monroe-Echo Lake #2***

Table 6: 6 ohm inductors – Reinforcing Maple Valley–SnoKing 230 kV lines versus options to upgrade Sammamish-Lakeside-Talbot 115 kV lines versus Monroe-Echo Lake #2

Study #	Series Inductors on SCL's 115 kV Cables- 6 ohms	Maple Valley-SnoKing High Temp	Maple Valley-SnoKing Rebuild	PSE's Sammamish - Lakeside - Talbot 115kV to 230kV Upgrade Project (Two Lines Operated at 230 kV)	PSE's Sammamish - Lakeside - Talbot 115kV to 230kV Upgrade Project (One Line Operated at 230 kV)	Monroe-Echo Lake #2 500kV	Total TCRM - Without TCRM Lines Outside of the Puget Sound Area	Winter South North WSNI Thermal TTC at 680 MW Puget Sound Generation
4	X	X					8,433	2,297
11	X		X				7,623	2,632
18	X			X			8,666	2,038
28	X	X		X			9,003	2,700
81	X				X		13,422	1,643
80	X					X	5,047	2,875

The lowest TCRM and the highest TTC for line improvements east of Lake Washington can be achieved by building the Monroe-Echo Lake #2 500 kV line in addition to the 6 ohm series inductors. Unfortunately, this is also the highest cost transmission option.

From a TCRM perspective there is little difference between the Maple Valley – SnoKing reinforcement options and the Sammamish – Lakeside – Talbot upgrade project with two lines operated at 230 kV although the Maple Valley-SnoKing rebuild option performs slightly better than the others. From a TTC perspective, there is an advantage for the Maple Valley-SnoKing options; particularly the rebuild option. However, this was not deemed to be a sufficient advantage over the preferred Sammamish-Lakeside-Talbot 230 kV upgrade project with two lines operated at 230 kV. A major benefit of the Sammamish-Lakeside-Talbot options is that

they would provide necessary load service to Lakeside Substation which the Maple Valley-SnoKing options would not. Pursuing the Sammamish-Lakeside-Talbot options at this time does not preclude reconductoring the Maple Valley-SnoKing lines at a later time.

The Sammamish – Lakeside – Talbot upgrade project can defer some of its substation construction costs by initially upgrading the 115 kV lines to 230 kV and operating one line at 115 kV and one line at 230 kV. This option did not perform as well as operating both lines at 230 kV for both TCRM and TTC. The reduction in performance has been deemed acceptable for the cost savings. The second line planned to be cut-over to 230 kV operation at a later date.

7) **6 ohm series inductors and Sammamish-Lakeside-Talbot upgrade:** ***Bothell-SnoKing rebuild versus reconductor***

Table 7: 6 ohm series inductors and Sammamish-Lakeside-Talbot upgrade: Bothell-SnoKing rebuild versus reconductor

Study #	Series Inductors on SCL's 115 kV Cables- 6 ohms	PSE's Sammamish - Lakeside - Talbot 115kV to 230kV Upgrade Project (Two Lines Operated at 230 kV)	PSE's Sammamish - Lakeside - Talbot 115kV to 230kV Upgrade Project (One Line Operated at 230 kV)	Bothell - SnoKing Rebuild	Bothell - SnoKing High Temp Instead of Rebuild	Total TCRM - Without TCRM Lines Outside of the Puget Sound Area	Winter South North WSNI Thermal TTC at 680 MW Puget Sound Generation
18	X	X		X		8,666	2,038
47	X	X			X	9,512	2,086
81	X		X	X		13,422	1,643
82	X		X		X	13,663	1,677

For either Sammamish – Lakeside – Talbot upgrade option the TCRM and TTC results are similar for the Bothell-SnoKing rebuild and reconductoring options. The reconductor of the Bothell-SnoKing lines would provide acceptable performance at a lower cost with minimal permitting and mitigation requirements.

Appendix A

Table of TCRM and TTC Results

ColumbiaGrid PSAST Options for N-1-X TCRM Determination

	115 kV Reinforcement Options									230 kV & 500 kV Reinforcement Options							TCRM & TTC Values		
Study #	SCL Phase Shifting Transformer	Series Inductors on SCL's 115 kV Cables- 26 ohms	Series Inductors on SCL's 115 kV Cables- 6 ohms	3rd 115 kV Underground Cable from Mass to Broad Street & Mass Bank 1 Energized	Replace SCL's Existing 115 kV Cables (no inductors)	Replace SCL's Existing 115 kV Cables (6 ohm inductors)	SCL's North Downtown Substation	SCL's North Downtown Substation (6 ohm inductors)	Maple Valley-SnoKing High Temp	Maple Valley-SnoKing Rebuild	PSE's Sammamish - Lakeside - Talbot 115kV to 230kV Upgrade Project (Two Lines Operated at 230 kV)	PSE's Sammamish - Lakeside - Talbot 115kV to 230kV Upgrade Project (One Line Operated at 230 kV)	Monroe-Echo Lake #2 500kV	Bothell - SnoKing High Temp Instead of Rebuild	With Covington, Portalway, Extended RAS, Bothell - SnoKing Upgrade	Total TCRM - Without TCRM Lines Outside of the Puget Sound Area	TTC (Thermal Only)	Notes
54																308,343	-	PSAST 2020 Winter South-to-North Expansion Plan Base Case
24															X	73,898	920	
1	X								X						X	13,122	2455	
3		X							X						X	10,304	2270	
4			X						X						X	8,433	2297	
5				X					X						X	19,027	1513	
6					X				X						X	19,398	1602	
7						X			X						X	8,258	2448	
32							X		X						X	117,049	-1380	
36								X	X						X	8,778	2672	
8	X									X					X	14,039	2692	
10		X								X					X	12,659	2652	
11			X							X					X	7,623	2632	
12				X						X					X	13,172	1820	
13					X					X					X	13,012	2120	
14						X				X					X	7,423	2664	
33							X			X					X	82,697	-1350	
37								X		X					X	7,111	2708	
15	X										X				X	11,500	2136	
17		X									X				X	10,460	1773	
18			X								X				X	8,666	2038	
81			X									X			X	13,422	1643	
47			X								X			X	X	9,512	2086	
82			X									X		X	X	13,663	1677	Preferred Plan
19				X							X				X	11,213	2297	
20					X						X				X	11,746	2210	
21						X					X				X	8,666	2044	
34							X				X				X	38,594	-832	
38								X			X				X	9,101	2207	
49								X			X			X	X	10,286	2233	
25	X								X		X				X	9,664	2745	
27		X							X		X				X	9,288	2497	
28			X						X		X				X	9,003	2700	
29				X					X		X				X	11,460	2305	
30					X				X		X				X	12,395	2377	
31						X			X		X				X	9,003	2700	
35							X		X		X				X	38,463	-804	
39								X	X		X				X	9,296	2732	
56								X	X		X			X	X	10,285	2753	
22													X		X	13,501	2104	
40							X						X		X	46,466	-292	
41								X					X		X	4,143	2916	
80			X										X		X	5,047	2875	

EXHIBIT B
NOTICES

Any notice required under this MOA shall be in writing and shall be delivered in person; or with proof of receipt by a nationally recognized delivery service or by United States Certified Mail. Notices are effective when received. Either Party may change the name or address for receipt of notice by providing notice of such change. The Parties shall deliver notices to the following person and address:

If to Seattle City Light:

Attention:
Phone:
Fax:
Email:

If by First Class Mail:

City of Seattle, City Light Department
(Customer Address)
(Customer City, State, Zip)

If by Overnight Delivery Service:
City of Seattle, City Light Department
(Customer Address)
(Customer City, State, Zip)

If to BPA:

Attention:
Phone:
Fax:
Email:

If by First Class Mail:

Bonneville Power Administration
P.O. Box 61409
Vancouver, WA 98666-1409

If by Overnight Delivery Service:
Bonneville Power Administration – TSE/TPP-2
7500 NE 41st Street – Suite 130
Vancouver, WA 98662

If to the Puget:

Attention:
Phone:
Fax:
Email:

If by First Class Mail:

Puget Sound Energy, Inc.
P.O. Box 97034
Bellevue, WA 98009-9734

If by Overnight Delivery Service:
Puget Sound Energy, Inc.
10885 N.E. 4th Street, Suite 1100
Bellevue, WA 98004-5591

Department of Energy

Bonneville Power Administration
P.O. Box 61409
Vancouver, WA 98666-1409

TRANSMISSION SERVICES

August X, 2014

In reply refer to: TSE/TPP-2

Contract No. 14TX-16053
Letter Agreement

Ms. Booga Gilbertson
Vice President, Operations Services
Puget Sound Energy, Inc.
10885 NE 4th Street, PSE – 11S
Bellevue, WA 98004

Mr. Phillip West
Customer Service Energy Officer
City of Seattle, City Light Department
700 Fifth Avenue, Suite 3200
Seattle, WA 98104-5031

Dear Ms. Gilbertson and Mr. West:

The Bonneville Power Administration (BPA), Puget Sound Energy, Inc, (PSE) and City of Seattle, City Light Department (SCL) are parties to the Memorandum of Agreement (MOA), Contract No. 11TX-15450, relating to the Preferred Puget Sound Area Plan of Service Projects and Cost Allocation (Projects). The parties to the MOA are currently in the initial stages of development of the P~~p~~rojects described in the MOA. As this has progressed, certain aspects of the MOA were identified that the parties believe need to be clarified.

This Letter Agreement (Agreement) is intended to clarify the scope changes related to the Covington 500 kV Transformer Addition Project described in Section 3(a)(1) of the MOA and the Bothell to SnoKing Reconductor Project described in Section 3(c)(1) of the MOA.

BPA's transformer addition originally planned for Covington Substation has been moved to Raver Substation. There is no change in financial responsibility under the MOA due to this relocation.

The Bothell to SnoKing Reconductor Project was identified in the MOA as an SCL project. However, during subsequent discussions it was discovered that BPA owns the first ½ mile of these lines on the SnoKing end. BPA will rebuild its owned portion of these lines at its cost, including any necessary replacement of equipment within SnoKing Substation associated with these lines.

Please sign all originals of this Agreement where indicated below, retain one original for your records and return the remaining originals to my attention at one of the following addresses at your earliest convenience, but not later than Close of Business on September xx, 2014:

First Class Mail

Bonneville Power Administration
Mail Stop: TSE/TPP-2
P.O. Box 61409
Vancouver, WA 98666-1409

Overnight Delivery Service

Bonneville Power Administration
Mail Stop: TSE/TPP-2
7500 NE 41st Street – Suite 130
Vancouver, WA 98662

BPA will ensure that ~~Puget~~ PSE and SCL have a full set of original signature pages.

If you have any questions, please call me at (360) 619-6015.

Sincerely,

Toni L. Timberman
Senior Transmission Account Executive
Transmission Sales

~~CONCUR:~~

PUGET SOUND ENERGY, INC.

By: _____

Name: _____
(Print/Type)

Title: _____

Date: _____

CITY OF SEATTLE,
CITY LIGHT DEPARTMENT

By: _____

Name: _____
(Print/Type)

Title: _____

Date: _____

bcc:
C. Olsen– KSC/-TPP-1
B. Bennett – LT-7
M. Marleau – TEP/TPP-1
J. Jusupovic – TPC/TPP-4
J. Weiss – TPCV/COVINGTON
T. Timberman – TSE/TPP-2
P. Gibson – TSES/TPP-2
Customer File – TSE/TPP-2 (TM-11, Puget Sound Energy, Inc.)
Customer File – TSE/TPP-2 (TM-11, City of Seattle, City Light Department-)
Official File – CCM_-Support (Agreement 14TX-16053)

(W:\CT\Puget Sound Energy, Inc\Drafts\16053_PSE-SCL-PSANI MOA SCOPE CHANGE LTR AGMT.Doc)

Department of Energy

Bonneville Power Administration
P.O. Box 61409
Vancouver, WA 98666-1409

TRANSMISSION SERVICES

August XX, 2014

In reply refer to: TSE/TPP-2

Contract No. 14TX-16054
Letter Agreement

Ms. Booga Gilbertson
Vice President,
Operations Services
Puget Sound Energy, Inc.
10885 NE 4th Street, PSE – 11S
Bellevue, WA 98004

Dear Ms. Gilbertson:

The Bonneville Power Administration (BPA), Puget Sound Energy, Inc, (PSE) and City of Seattle, City Light Department (SCL) are parties to the Memorandum of Agreement (MOA), Contract No. 11TX-15450, relating to the Preferred Puget Sound Area Plan of Service Projects and Cost Allocation (Projects). The parties to the MOA are currently in the initial stages of development of the Pprojects described in the MOA. As this has progressed, certain aspects of the MOA were identified that the parties believe need to be clarified.

This Letter Agreement (Agreement) is intended to clarify the use of BPA funds contributed toward the adjusted projected capital cost of the Puget Preferred Plan Projects described in Sections 4(c) and 5(a) of the MOA.

The parties acknowledge that BPA is not involved in any manner or capacity in PSE's Sammamish to Lakeside to Talbot Rebuild Project and agree that no BPA funds provided under the MOA will be allocated to PSE's Sammamish to Lakeside to Talbot Rebuild Project. Instead, all BPA funds under the MOA will be allocated to PSE's Lakeside 230 kV Transformer Addition Project as well as the other BPA- and SCL Preferred Plan Projects identified in the MOA.

Please sign all originals of this Agreement where indicated below, retain one original for your records and return the remaining original to my attention at one of the following addresses at your earliest convenience, but not later than Close of Business on September xx, 2014:

First Class Mail	Overnight Delivery Service
Bonneville Power Administration Mail Stop: TSE/TPP-2 P.O. Box 61409 Vancouver, WA 98666-1409	Bonneville Power Administration Mail Stop: TSE/TPP-2 7500 NE 41st Street – Suite 130 Vancouver, WA 98662

If you have any questions, please call me at (360) 619-6015.

Sincerely,

Toni L. Timberman
Senior Transmission Account Executive
Transmission Sales

~~CONCUR:~~

PUGET SOUND ENERGY, INC.

By: _____

Name: _____
(Print/Type)

Title: _____

Date: _____

DRAFT

bcc:
C. Olsen– KSC/-TPP-1
B. Bennett – LT-7
M. Marleau – TEP/TPP-1
J. Jusupovic – TPC/TPP-4
J. Weiss – TPCV/COVINGTON
T. Timberman – TSE/TPP-2
P. Gibson – TSES/TPP-2
Customer File – TSE/-TPP-2 (TM-11, Puget Sound Energy, Inc.)
Customer File – TSE/TPP-2 (TM-11, City of Seattle, City Light Department-)
Official File – CCM_-Support (Agreement 14TX-16054)

(W:\CT\Puget Sound Energy, Inc\Drafts\16054 PSANI MOA_USE OF FUNDS LTR AGMT.Doc)

DRAFT

Department of Energy

Bonneville Power Administration
P.O. Box 61409
Vancouver, WA 98666-1409

TRANSMISSION SERVICES

August XX, 2014

In reply refer to: TSE/TPP-2

Contract No. 14TX-16060
Letter Agreement

Ms. Booga Gilbertson
Vice President Operations Services
Puget Sound Energy, Inc.
P.O. Box 90868
Bellevue, WA 98009-0868

Mr. Phillip West
Customer Service Energy Officer
City of Seattle, City Light Department
700 Fifth Ave., Suite 2822
Seattle, WA 98104-5031

Dear Ms. Gilbertson and Mr. West:

The Bonneville Power Administration (BPA), Puget Sound Energy, Inc., (PSE) and City of Seattle, City Light Department (SCL) are parties to the Memorandum of Agreement (MOA), Contract No. 11TX-15450, relating to the Preferred Puget Sound Area Plan of Service Projects and Cost Allocation (Projects). The parties to the MOA are currently in the initial stages of development of the projects described in the MOA. As this has progressed, certain aspects of the MOA were identified that the parties believe need to be clarified.

This Letter Agreement (Agreement) is intended to clarify BPA's obligations under the National Environmental Policy Act (NEPA) for its role in the MOA, as described in Section 8 of the MOA, as well as the nature of the ~~Preferred Plan Projects~~Projects described in the MOA for the purposes of NEPA.

With respect to environmental compliance BPA, as a Federal agency, has certain obligations and responsibilities under NEPA and other federal laws (collectively the NEPA review process) that it must fulfill before it can make a final decision concerning whether to participate in implementation of certain ~~of the Preferred Plan~~ Projects described in Section 3 of the MOA and the capital cost allocation described in Sections 4 and 5 of the MOA. Nothing in the MOA shall be construed as obligating or committing BPA to make a final decision concerning any of the ~~Preferred Plan~~ Projects and capital cost allocation before completing the NEPA review process. In addition, BPA reserves the right to determine the appropriate NEPA and other environmental compliance strategies for its actions under the MOA, and to choose any alternatives considered in the NEPA process, including the no-action alternative.

Furthermore, the parties acknowledge and agree that while the MOA identifies a number of ~~Preferred Plan~~ Projects to be undertaken by the parties, each of these P~~p~~rojects could proceed independently from the others and that no single project is contingent or dependent upon another in the goal of relieving transmission congestion in the Puget Sound Area. As such, BPA, SCL, and PSE may elect to conduct separate environmental reviews for each of the P~~p~~rojects identified in the MOA.

Please sign all originals of this Agreement where indicated below, retain one original for your records and return the remaining originals to my attention at one of the following addresses at your earliest convenience, but not later than Close of Business on September xx, 2014:

First Class Mail	Overnight Delivery Service
Bonneville Power Administration	Bonneville Power Administration
Mail Stop: TSE/TPP-2	Mail Stop: TSE/TPP-2
P.O. Box 61409	7500 NE 41st Street – Suite 130
Vancouver, WA 98666-1409	Vancouver, WA 98662

BPA will ensure that PSE~~uget~~ and SCL have a full set of original signature pages.

Please do not hesitate to contact me at (360) 619-6015, or BPA's Environmental Specialist, Justin Moffett at (503) 230-3233 if you would like to discuss this information.

Sincerely,

Toni L. Timberman
Senior Transmission Account Executive
Transmission Sales

~~CONCUR:~~

PUGET SOUND ENERGY, INC.

By: _____

Name: _____
(Print/Type)

Title: _____

Date: _____

CITY OF SEATTLE,
CITY LIGHT DEPARTMENT

By: _____

Name: _____
(Print/Type)

Title: _____

Date: _____

bcc:
J. Moffett – KEC-4
C. Olsen– KSC/-TPP-1
B. Bennett – LT-7
M. Marleau – TEP/TPP-1
J. Jusupovic – TPC/TPP-4
J. Weiss – TPCV/COVINGTON
T. Timberman – TSE/TPP-2
P. Gibson – TSES/TPP-2
Customer File – TSE/-TPP-2 (TM-11, Puget Sound Energy, Inc.)
Customer File – TSE/TPP-2 (TM-11, City of Seattle, City Light Department.)
Official File – CCM_-Support (Agreement 14TX-16060)

(W:\CT\Puget Sound Energy, Inc\Drafts\16060 PSANI MOA NEPA LTR AGMT 8_8 TT.Doc)

Formatted: Tab stops: 0.57", Left

Department of Energy

Bonneville Power Administration
P.O. Box 61409
Vancouver, WA 98666-1409

TRANSMISSION SERVICES

August X, 2014

In reply refer to: TSE/TPP-2

Contract No. 14TX-16062
Letter Agreement

Ms. Booga Gilbertson
Vice President, Operations Services
Puget Sound Energy, Inc.
10885 NE 4th Street, PSE – 11S
Bellevue, WA 98004

Mr. Phillip West
Customer Service Energy Officer
City of Seattle, City Light Department
700 Fifth Avenue, Suite 3200
Seattle, WA 98104-5031

Dear Ms. Gilbertson and Mr. West:

The Bonneville Power Administration (BPA), ~~the~~ City of Seattle, City Light Department (SCL) and Puget Sound Energy, Inc. (PSE) are parties to the Memorandum of Agreement (MOA), Contract No. 11TX-15450, relating to the Preferred Puget Sound Area Plan of Service Projects and Cost Allocation (Projects). The parties to the MOA are currently in the initial stages of development of the P~~p~~rojects described in the MOA. As this has progressed certain aspects of the MOA were identified that the parties believe need to be clarified.

This Letter Agreement (Agreement) is to meet the requirement in Section 7, Payment Schedule, of the MOA, which states that "The Parties shall agree in writing to the method and schedule for the cost share contributions to be made under this MOA." BPA, PSE~~uget~~ and SCL~~eattle~~ agree that waiting until the completion of a project before exchanging funds (as specified in Section 7) is not the preferred course of action, given the potential for multiple years delay for completion of a project. An alternative arrangement is described below.

The following Financial Terms and Conditions shall apply to all cost sharing obligations incurred under the MOA:

FINANCIAL TERMS AND CONDITIONS STATEMENT

Each Party's cost obligation for performance of the duties associated with construction of each Preferred Plan Project shall be as specified in Sections 4 and 5 of the MOA. The cost of performing the duties associated with construction of each Preferred Plan Project shall be the actual cost of doing the work plus an overhead rate of xx% for labor and yy% for materials, representing the indirect costs of the project office plus the contractual support costs of contract negotiation, billing and accounting functions, and contract management.

Comment [TLT1]: Specify separate overheads for each Party?

Payments made to BPA shall be held in an account established for this Agreement. If BPA needs additional funds to complete the work at any time during performance of the project, BPA may request, in writing, for PSE to advance such additional funds to BPA for deposit in the account. PSE shall advance such additional funds within 30 days of BPA's written request, and BPA may temporarily stop work until PSE supplies the requested funds. If PSE does not advance such

DRAFT

additional funds by the due date or, if at any time before completion of the project PSE elects to stop work under this Agreement, BPA will cease all work and restore, as a cost to the project at PSE's expense, government facilities and/or records (1) to their condition prior to the beginning of work under this Agreement, or (2) to some other mutually agreeable condition.

Within a reasonable time after completion of the project BPA shall make a full accounting to PSE showing the actual costs charged against the account. BPA shall either remit any unexpended balance in the account to PSE or bill for any costs in excess of the deposits in the account. PSE shall pay any excess costs within 30 days of the billing.

Payments not received within 30 days of the invoice date will accrue interest on the amount due from the invoice date to the date paid, at an annual interest rate equal to the higher of i) the prime rate (as reported in the Wall Street Journal in the first issue published during the month in which payment by PSE is due) plus 4 percent; or ii) such prime rate multiplied by 1.5.

- Language if cost is exceeding estimate in MOA –
- Periodic (every six months?) update on status of project and where it stands with respect to estimated cost
- Provisions for each party to invoice the others
- And???

DRAFT

Please sign all originals of this Agreement where indicated below, retain one original for your records and return the remaining originals to my attention at one of the following addresses at your earliest convenience, but not later than Close of Business on September xx, 2014:

First Class Mail	Overnight Delivery Service
Bonneville Power Administration Mail Stop: TSE/TPP-2 P.O. Box 61409 Vancouver, WA 98666-1409	Bonneville Power Administration Mail Stop: TSE/TPP-2 7500 NE 41st Street – Suite 130 Vancouver, WA 98662

BPA will ensure that ~~Puget~~ PSE and SCL have a full set of original signature pages.

If you have any questions, please call me at (360) 619-6015.

Sincerely,

Toni L. Timberman
Senior Transmission Account Executive
Transmission Sales

~~CONCUR:~~

PUGET SOUND ENERGY, INC.

By: _____

Name: _____
(Print/Type)

Title: _____

Date: _____

CITY OF SEATTLE,
CITY LIGHT DEPARTMENT

By: _____

Name: _____
(Print/Type)

Title: _____

Date: _____

DRAFT

bcc:
R. Shier – FRG-2
C. Olsen– KSC-TPP-1
B. Bennett – LT-7
M. Marleau – TEP/TPP-1
M. Holst – TEPO/TPP-1
J. Jusupovic – TPC/TPP-4
J. Weiss – TPCV/COVINGTON
T. Timberman – TSE/TPP-2
P. Gibson – TSES/TPP-2
Customer File – TSE/-TPP-2 (TM-11, Puget Sound Energy, Inc.)
Customer File – TSE/TPP-2 (TM-11, City of Seattle, City Light Department-)
Official File – CCM_-Support (Agreement 14TX-16062)

(W:\CT\Puget Sound Energy, Inc\Drafts\16062 PSANI MOA Financial Terms And Conditions.Doc)

Comment [tmv5502]: I'd suggest including the Finance ppl that are in charge of managing the funds associated with this Agreement

DRAFT

From:	Bennett,Barry (BPA) - LT-7
To:	Chan,Allen C (BPA) - LT-7; Adams,Hub V (BPA) - LN-7; Timberman,Toni L (BPA) - TSE-TPP-2
Cc:	Gibson,Paula L (BPA) - TSES-TPP-2; Moffett,Justin T (BPA) - KEC-4; Marleau,Michael L (BPA) - TEP-TPP-1; Jusupovic,Jana D (BPA) - TPC-TPP-4; Van Cleave,Tonya M (BPA) - TPCC-TPP-4; Fiedler,Paul A (BPA) - TG-DITT-2
Subject:	RE: Letter Agreements for PSANI MOA
Date:	Monday, August 18, 2014 8:16:00 AM

No comments.

-----Original Message-----
From: Chan,Allen C (BPA) - LT-7
Sent: Monday, August 18, 2014 8:07 AM
To: Adams,Hub V (BPA) - LN-7; Timberman,Toni L (BPA) - TSE-TPP-2
Cc: Gibson,Paula L (BPA) - TSES-TPP-2; Bennett,Barry (BPA) - LT-7; Moffett,Justin T (BPA) - KEC-4; Marleau,Michael L (BPA) - TEP-TPP-1; Jusupovic,Jana D (BPA) - TPC-TPP-4; Van Cleave,Tonya M (BPA) - TPCC-TPP-4; Fiedler,Paul A (BPA) - TPCV-TPP-4
Subject: RE: Letter Agreements for PSANI MOA

I don't have any comments on the agreements.

Allen C. Chan
Office of General Counsel
Bonneville Power Administration
P.O. Box 3621, LT-7
Portland, OR 97208-3621
Phone: (503) 230-3551
(b) (6) [redacted]
Email: acchan@bpa.gov

-----Original Message-----
From: Adams,Hub V (BPA) - LN-7
Sent: Friday, August 15, 2014 4:34 PM
To: Timberman,Toni L (BPA) - TSE-TPP-2
Cc: Gibson,Paula L (BPA) - TSES-TPP-2; Bennett,Barry (BPA) - LT-7; Moffett,Justin T (BPA) - KEC-4; Marleau,Michael L (BPA) - TEP-TPP-1; Jusupovic,Jana D (BPA) - TPC-TPP-4; Van Cleave,Tonya M (BPA) - TPCC-TPP-4; Fiedler,Paul A (BPA) - TPCV-TPP-4; Chan,Allen C (BPA) - LT-7
Subject: RE: Letter Agreements for PSANI MOA

Hello Toni - the two of these that I previously gave edits on (the NEPA one and the use-of-funds one) look good to me. The other two also appear fine to me, but I'll defer to Allen and/or Barry for actual legal review and any comments on those two.

Thanks,
Hub

-----Original Message-----
From: Timberman,Toni L (BPA) - TSE-TPP-2
Sent: Tuesday, August 12, 2014 4:09 PM
To: Adams,Hub V (BPA) - LN-7; Moffett,Justin T (BPA) - KEC-4; Marleau,Michael L (BPA) - TEP-TPP-1; Jusupovic,Jana D (BPA) - TPC-TPP-4; Van Cleave,Tonya M (BPA) - TPCC-TPP-4; Fiedler,Paul A (BPA) - TPCV-TPP-4; Chan,Allen C (BPA) - LT-7
Cc: Gibson,Paula L (BPA) - TSES-TPP-2; Bennett,Barry (BPA) - LT-7
Subject: Letter Agreements for PSANI MOA

Attached are the latest drafts of the letter agreements to clarify the PSANI MOA. Note that Jana is still working on 16062 to clarify how $$ will change hands, so that one is still very draft.

Please let me know if you have comments on the other three. I am still working on scheduling a

meeting with Hardev to get his approval to proceed with these agreements.

I have attached the PSANI MOA for your convenience.

Thanks,
Toni

Contract No. 11TX-15450

MEMORANUDUM OF AGREEMENT

executed by the

UNITED STATES OF AMERICA

DEPARTMENT OF ENERGY

acting by and through the

BONNEVILLE POWER ADMINISTRATION

and

THE CITY OF SEATTLE

acting by and through its

CITY LIGHT DEPARTMENT

and

PUGET SOUND ENERGY, INC.

(Relating to the Preferred Puget Sound Area Plan of Service Projects and Cost Allocation)

This MEMORANDUM OF AGREEMENT (MOA) is executed by the UNITED STATES OF AMERICA, Department of Energy, acting by and through the BONNEVILLE POWER ADMINISTRATION (BPA), THE CITY OF SEATTLE, acting by and through its CITY LIGHT DEPARTMENT (Seattle City Light), and PUGET SOUND ENERGY INC. (Puget). BPA, Seattle City Light, and Puget are sometimes referred to individually as "Party" and collectively as "Parties".

WHEREAS, BPA owns and is responsible for the reliable operation of the Federal Columbia River Transmission System (FCRTS),

WHEREAS, Seattle City Light and Puget each own and operate electric systems that are interconnected with the FCRTS in the Puget Sound Area and electric power is delivered within those electric systems, and to or from them by BPA over the FCRTS,

WHEREAS, the Puget Sound Area experiences periods of transmission congestion that may require mitigation to maintain reliable operation of the Puget Sound Area Interconnection, including in some cases, curtailments of firm transmission service,

WHEREAS, as of February 2011, the Parties entered into Contract No. 11TX-15290, "Temporary Operational Support Program Agreement," that provides for voluntary changes in planned generation, including an increase in Puget Sound Area generation, as temporary and short-term measures for relieving forecasted transmission congestion conditions that are expected to adversely affect the reliable operation of the Puget Sound Area Interconnection,

WHEREAS, representatives from each of the Parties and other entities participated in regional studies to develop a long term plan, and implement a range of physical improvements to preserve the reliable operation of the Puget Sound Area interconnection, and reduce the need to curtail firm transmission service,

WHEREAS, the Parties have identified the projects described herein that, when taken as a whole, are expected to preserve the reliable operation of the Puget Sound Area Interconnection, and reduce the need to curtail firm transmission service; and it is in their individual and collective interests to continue to support the efforts needed to carry out these projects, and

WHEREAS, the transmission congestion affecting the Puget Sound Area interconnection is a shared problem, and the projects and cost sharing arrangements provided herein are appropriate.

NOW THEREFORE, in consideration of the mutual obligations and undertakings herein, the sufficiency of which is acknowledged, the Parties agree as follows:

1. DEFINITIONS

(a) "Bothell to SnoKing Reconductor Project" means the project identified in the Preferred Plan of Service in which Seattle City Light will reconductor the existing Bothell to SnoKing No. 1 and No. 2 230 kV lines with high-temperature conductor.

(b) "BPA Preferred Plan Projects" means, collectively, the Covington 500 kV Transformer Addition Project and the Northern Intertie Remedial Action Scheme ("RAS") Improvement Project.

(c) "Broad Street Inductor Project" means the project identified in the Preferred Plan of Service in which Seattle City Light will add series inductors (up to 10 ohm) to the Massachusetts-Broad Street 115 kV line.

(d) "ColumbiaGrid" means the Washington non-profit membership corporation formed to improve the operational efficiency, reliability, and planned expansion of the Pacific Northwest transmission grid, the

eight members of which, as of the Effective Date, are Avista Corporation; BPA; Public Utility District No. 1 of Chelan County, Washington; Public Utility District No. 2 of Grant County, Washington; Puget; Seattle City Light; Public Utility District No. 1 of Snohomish County, Washington; and Tacoma Power.

(e) "Covington 500 kV Transformer Addition Project" means the project identified in the Preferred Plan of Service in which BPA will install a third 500–230 kV transformer at the BPA Covington Substation.

(f) "Delridge to Duwamish Reconductor Project" means the project identified in the Preferred Plan of Service in which Seattle City Light will reconductor the existing Delridge to Duwamish 230 kV line with high-temperature conductor.

(g) "Lakeside 230 kV Transformer Addition Project" means the project identified in the Preferred Plan of Service in which Puget will install a 230–115 kV transformer at the Puget Lakeside Substation.

(h) "Maple Valley to SnoKing Reconductor Project" means the project identified in the Preferred Plan of Service in which Seattle City Light will reconductor the existing Maple Valley to SnoKing 230 kV line with high-temperature conductor.

(i) "North Downtown Inductor Project" means the project identified in the Preferred Plan of Service in which Seattle City Light will add series inductors (up to 10 ohm) to the East Pine-Broad Street line as part of Seattle City Light's North Downtown Substation Project.

(j) "Northern Intertie RAS Improvement Project" means the project identified in the Preferred Plan of Service in which BPA will install new software for and re-wire electrical protection devices on the Northern Intertie RAS.

(k) "Northern Intertie RAS" means the existing BPA pre-programmed set of automatic operating steps that are designed to protect the regional high voltage electric grid in the event of a loss of one of the two Custer-Monroe 500 kV lines.

(l) "Preferred Plan of Service" means the "Updated Recommended Transmission Expansion Plan for the Puget Sound Area to Support Winter South-to-North Transfers" approved by ColumbiaGrid on October 28, 2011, a copy of which is attached as Exhibit A to this MOA.

(m) "Preferred Plan Projects" means, collectively, the BPA Preferred Plan Projects, the Puget Preferred Plan Projects, and the Seattle City Light Preferred Plan Projects.

(n) "Puget Preferred Plan Projects" means the Sammamish to Lakeside to Talbot Rebuild Project and the Lakeside 230 kV Transformer Addition Project.

(o) "Sammamish to Lakeside to Talbot Rebuild Project" means the project identified in the Preferred Plan of Service in which Puget will upgrade Puget's existing Sammamish to Lakeside to Talbot 115 kV lines to 230 kV operation using Puget's existing Sammamish to Lakeside to Talbot utility corridor.

(p) "Seattle City Light Preferred Plan Projects" means the Bothell to SnoKing Reconductor Project, the Broad Street Inductor Project, the North Downtown Inductor Project, and the Delridge to Duwamish Reconductor Project.

2. TERM

The term of this MOA shall be effective on the date of execution by all Parties (Effective Date) and shall continue until the earliest to occur of the following: (i) the date of completion of the last of the Preferred Plan Projects; (ii) a Party terminates this MOA pursuant to section 5(c) of this MOA; or (iii) December 31, 2020.

3. PREFERRED PLAN OF SERVICE PROJECTED PROJECT COMPLETION SCHEDULE AND COST

(a) **BPA Preferred Plan Projects**. Each Party acknowledges that, as of the Effective Date, the projected project completions schedule and capital costs of the BPA Preferred Plan Projects are as follows:

BPA Preferred Plan Project	Projected Completion	Projected Capital Cost
1. Covington 500 kV Transformer Addition Project	2018	$56.2 million
2. Northern Intertie RAS Improvement Project	2014	$4.0 million

(b) **Puget Preferred Plan Projects.** Each Party acknowledges that, as of the Effective Date, the projected project completions schedule and capital costs of the Puget Preferred Plan Projects are as follows:

Puget Preferred Plan Project	Projected Completion	Projected Capital Cost
1. Sammamish to Lakeside to Talbot Rebuild Project	2017	$45.0 million (single circuit) or $41.3 million (double circuit)
2. Lakeside 230 kV Transformer Addition Project	2017	$22.0 million

(c) **Seattle City Light Preferred Plan Projects.** Each Party acknowledges that, as of the Effective Date, the projected project completions schedule and capital costs of the Seattle City Light Preferred Plan Projects are as follows:

Seattle City Light Preferred Plan Project	Projected Completion	Projected Capital Cost
1. Bothell to SnoKing Reconductor Project	2017	$2.5 million
2. Broad Street Inductor Project	2017	$7.3 million*
3. North Downtown Inductor Project	2017	$4.4 million*
4. Delridge to Duwamish Reconductor Project	2016	$1.9 million

(d) **Preferred Plan Project Not Planned for Construction Based On the Construction of the Puget Preferred Plan Projects.** Each Party acknowledges that, the construction of the Puget Preferred Plan Projects negates the need for the construction of the Maple Valley to

* The projected capital costs of the Broad Street Inductor Project and the North Downtown Inductor Project do not reflect any projected costs for land acquisition. As of the Effective Date, the Parties acknowledge that Seattle City Light may have to acquire land to accomplish the Broad Street Inductor Project, and the actual capital costs of the Broad Street Inductor Project will, if necessary, reflect the actual costs of land acquisition for such project. As of the Effective Date, the Parties do not anticipate that the North Downtown Inductor Project will require Seattle City Light to acquire any land.

SnoKing Reconductor Project. Each Party acknowledges that, as of the Effective Date, the projected project completions schedule and capital costs of the Maple Valley to SnoKing Reconductor Project are as follows:

Preferred Plan Project	Projected Completion	Projected Capital Cost
Maple Valley to SnoKing Reconductor Project	N/A	$16.1 million

4. PRELIMINARY CAPITAL COST ALLOCATION

As of the Effective Date of this MOA, the Parties agree to share in the capital costs of Preferred Plan Projects as follows:

(a) **BPA Preferred Plan Projects**. BPA shall pay the entire actual capital cost of each of (i) the Covington 500 kV Transformer Addition Project and (ii) the Northern Intertie RAS Improvement Project

(b) **Seattle City Light Preferred Plan Projects.** BPA, Puget, and Seattle City Light shall each pay one-third of the total actual capital cost of each of (i) the Bothell to SnoKing Reconductor Project; (ii) the Delridge to Duwamish Reconductor Project; (iii) the Broad Street Inductor Project; and (iv) the North Downtown Inductor Project.

(c) **Puget Preferred Plan Projects.** BPA and Seattle City Light shall each pay to Puget an amount equal to one-third of the adjusted projected capital cost of the Maple Valley to SnoKing Reconductor Project, which adjusted projected capital cost shall be determined as provided in the following table:

Projected Capital Cost of the Maple Valley to SnoKing Reconductor Project	=	$16.1 million * Cost Differences in Reconductor Projects

where:

Cost Differences in Reconductor Projects	=	the quotient of

(i) the sum of the actual capital costs of the Delridge to Duwamish Reconductor Project and Bothell to SnoKing Reconductor Project and

(ii) the sum of the projected capital costs of the Delridge to Duwamish Reconductor Project and Bothell to SnoKing Reconductor Project identified in section 3(c) above (i.e., $4.4 million)

5. FINAL CAPITAL COST ALLOCATION AND OPTION OF ELECTION TO CANCEL

(a) The allocations identified in section 4 are based on preliminary planning capital cost projections. The final capital cost allocation for the Seattle City Light Preferred Plan Projects shall be based on actual design and construction capital costs for each of the Seattle City Light Preferred Plan Projects, and the final capital cost allocation for the Puget Preferred Plan Projects shall be in accordance with the formula proscribed in section 4(a) above. The Parties shall review such actual design and construction capital costs and schedules and shall agree in writing to the final capital cost allocation.

(b) Each Party reserves the right to cancel any Preferred Plan Project for which such Party is the sponsor if such Party determines that

(i) the actual capital cost of such Preferred Plan Project is likely to exceed the projected capital cost of such Preferred Plan Project by a factor that is equal to or in excess of thirty percent (30%), or

(ii) the projected in-service date of the Preferred Plan Project will be more than twenty-four (24) months later than the projected completion date identified in section 3 above for such Preferred Plan Project.

If a Party elects to cancel a Preferred Plan Project for which such Party is a sponsor under this section 5(b), such Party shall provide written notice to such other Parties within five (5) days of such election. Within a reasonable period of time after receipt of such written notice, representatives of the Parties shall convene and identify alternative projects that the Parties expect will preserve the reliable operation of the Puget Sound Area Interconnection and reduce the need to curtail firm transmission service in a manner similar to the project cancelled pursuant to section 5(b). If the Parties cannot agree in good faith upon an alternative project to replace a project cancelled pursuant to section 5(b) within a reasonable period following receipt of written notice of

such termination, then any Party may terminate this MOA upon 90 days' written notice to the other Parties.

6. RESPONSIBILITY FOR ALL OTHER COSTS

(a) Each Party shall be solely responsible for the Preferred Plan Project for which such Party is the sponsor, less the contributions from the other Parties as provided in section 4. This MOA only affects the cost sharing for the Preferred Plan Projects.

(b) Each Party shall own the assets for the Preferred Plan Project for which such Party is the sponsor and shall be solely responsible for the operation and maintenance costs of such assets. Each Party shall be entitled to any capacity increases to its transmission system that results from any assets installed pursuant to this MOA.

(c) If any Party enhances a Preferred Plan Project after completion of such Preferred Plan Project to meet such Party's needs, the cost of such future enhancements shall be borne solely by such Party. Each Party shall attempt in good faith to coordinate with the other Parties with respect to any future enhancements to a Preferred Plan Project to minimize or eliminate any impact to the interconnected electric systems of such other Parties.

7. PAYMENT SCHEDULE

Payments will be made at the completion of individual projects. The Parties shall agree in writing to the method and schedule for the cost share contributions to be made under this MOA.

8. NATIONAL ENVIRONMENTAL POLICY ACT ASSESSMENT

To the extent that BPA's financial contributions under this MOA are determined to trigger the need for analysis of projects under the National Environmental Policy Act, the Parties shall coordinate such assessment.

9. JOINT COMMUNICATIONS

The Parties shall coordinate joint communications regarding presentations of the preferred plan of service to the public.

10. GENERAL PROVISIONS

(a) This MOA, including documents expressly incorporated by reference, constitutes the entire agreement between the Parties. It supersedes all previous communications, representations, or contracts, either written or oral, which purport to describe or embody the subject matter of this MOA.

(b) No amendment of this MOA shall be of any force or effect unless set forth in a written instrument signed by authorized representatives of each Party.

(c) This MOA is made and entered into for the sole benefit of the Parties, and the Parties intend that no other person or entity shall be a direct or indirect beneficiary of this MOA.

(d) This MOA shall be interpreted consistent with and governed by federal law.

(e) In the event that any provision of this MOA is determined to be invalid or unenforceable for any reason, in whole or part, the remaining provisions of this MOA shall be unaffected thereby and shall remain in full force and effect to the fullest extent permitted by law, and such invalid or unenforceable provision shall be replaced by the Parties with a provision that is valid and enforceable and that comes closest to expressing the Parties' intention with respect to such invalid or unenforceable provision.

(f) Each Party shall be solely responsible for and shall pay its own costs and expenses incurred by it in connection with the negotiation of this MOA.

(g) Whenever this MOA requires or provides that (i) a notice be given by a Party to any other Party or (ii) a Party's action requires the approval or consent of any other Party, such notice, consent or approval shall be given in writing and shall be given in accordance with the provisions of Exhibit B to this MOA.

(h) This MOA is binding on any successors and assigns of the Parties. No Party may otherwise transfer or assign this MOA, in whole or in part, without the other Parties' written consent. Such consent shall not be unreasonably withheld.

(i) Nothing contained in this MOA shall be construed as creating a corporation, company, partnership, association, joint venture or other entity, nor shall anything contained in this MOA be construed as

creating or requiring any fiduciary relationship between the Parties. No Party shall be responsible hereunder for the acts or omissions of any other Party. Nothing herein shall preclude (i) a Party from taking any action (or having its affiliates take any action) with respect to any other transmission project, including any such project that may compete with the projects provided herein, or (ii) the Parties jointly from entering into MOAs with third parties for the joint development, construction, ownership or operation of any project or for the provision of transmission capacity from such project.

(j) Other than the obligation to pay amounts due under Section 4, in no event shall any Party be liable to any other Party under any provision of this MOA for any losses, damages, costs or expenses for any direct, special, indirect, incidental, consequential, or punitive damages, including but not limited to loss of profit or revenue, whether based in whole or in part in contract or in tort, including negligence, strict liability, or any other theory of liability; provided, however, that damages for which a Party may be liable to any other Party under another agreement will not be considered to be special, indirect, incidental, or consequential damages hereunder.

(k) The Parties shall not be in breach of their respective obligations to the extent the failure to fulfill any obligation is due to an Uncontrollable Force. "Uncontrollable Force" means an event beyond the reasonable control of, and without the fault or negligence of, the Party claiming the Uncontrollable Force, that prevents that Party from performing its contractual obligations under this MOA and which, by exercise of that party's reasonable care, diligence and foresight, such Party was unable to avoid. Uncontrollable Forces include, but are not limited to:

(1) strikes or work stoppage;

(2) floods, earthquakes, or other natural disasters; terrorist acts; and

(3) final orders or injunctions issued by a court or regulatory body having competent subject matter jurisdiction which the Party claiming the Uncontrollable Force, after diligent efforts, was unable to have stayed, suspended, or set aside pending review by a court of competent subject matter jurisdiction.

Neither the unavailability of funds or financing, nor conditions of national or local economies or markets shall be considered an Uncontrollable Force. The economic hardship of a Party shall not

constitute an Uncontrollable Force. Nothing contained in this provision shall be construed to require any Party to settle any strike or labor dispute in which it may be involved.

If an Uncontrollable Force prevents a Party from performing any of its obligations under this MOA, such party shall: (1) immediately notify the other Parties of such Uncontrollable Force by any means practicable and confirm such notice in writing as soon as reasonably practicable; (2) use its best efforts to mitigate the effects of such Uncontrollable Force, remedy its inability to perform, and resume full performance of its obligation hereunder as soon as reasonably practicable; (3) keep the other Parties apprised of such efforts on an ongoing basis; and (4) provide written notice of the resumption of performance. Written notices sent under this section 10(k) must comply with Exhibit B, Notices and Contact Information.

11. WAIVER

No waiver of any provision or breach of this MOA shall be effective unless such waiver is in writing and signed by the waiving Party, and any such waiver shall not be deemed a waiver of any other provision of this MOA or any other breach of this MOA.

12. SIGNATURE

The Parties have caused this MOA to be executed as of the latest date all Parties have signed this MOA.

CITY OF SEATTLE CITY LIGHT DEPARTMENT		UNITED STATES OF AMERICA Department of Energy Bonneville Power Administration	
By:	Jorge Carrasco	By:	Harder Juj
Name: *(Print/ Type)*	Jorge Carrasco	Name: *(Print/ Type)*	Harder Juj
Title:	Superintendent	Title:	VP, Planning + Asset Mgmt.
Date:	1/31/12	Date:	1/31/12

PUGET SOUND ENERGY, INC.

By: Susan McLain

Name: Susan McLain
(Print/ Type)

Title: Senior Vice President Delivery Operations

Date: 1/31/12

EXHIBIT A
PREFERRED PLAN OF SERVICE

EXHIBIT B
NOTICES

Any notice required under this MOA shall be in writing and shall be delivered in person; or with proof of receipt by a nationally recognized delivery service or by United States Certified Mail. Notices are effective when received. Either Party may change the name or address for receipt of notice by providing notice of such change. The Parties shall deliver notices to the following person and address:

If to Seattle City Light:

Attention:
Phone:
Fax:
Email:

If by First Class Mail:

City of Seattle, City Light Department
(Customer Address)
(Customer City, State, Zip)

If by Overnight Delivery Service:
City of Seattle, City Light Department
(Customer Address)
(Customer City, State, Zip)

If to BPA:

Attention:
Phone:
Fax:
Email:

If by First Class Mail:

Bonneville Power Administration
P.O. Box 61409
Vancouver, WA 98666-1409

If by Overnight Delivery Service:
Bonneville Power Administration – TSE/TPP-2
7500 NE 41st Street – Suite 130
Vancouver, WA 98662

If to the Puget:

Attention:
Phone:
Fax:
Email:

If by First Class Mail:

Puget Sound Energy, Inc.
P.O. Box 97034
Bellevue, WA 98009-9734

If by Overnight Delivery Service:
Puget Sound Energy, Inc.
10885 N.E. 4th Street, Suite 1100
Bellevue, WA 98004-5591

EXHIBIT A
PREFERRED PLAN OF SERVICE

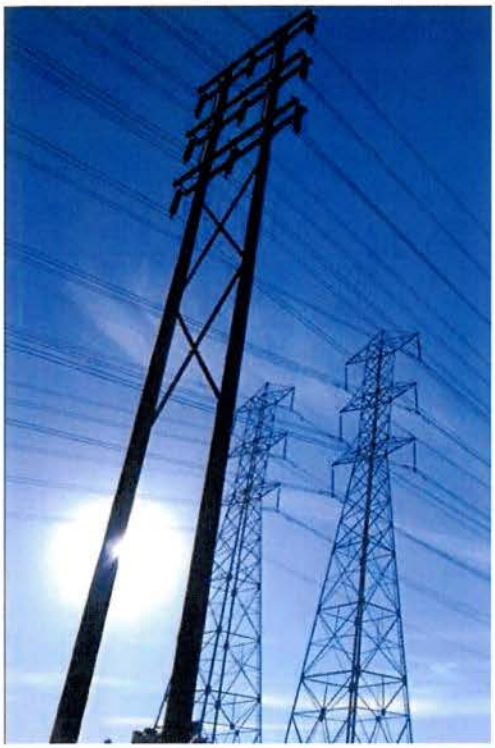

Updated Recommended Transmission Expansion Plan for the Puget Sound Area to Support Winter South-to-North Transfers

ColumbiaGrid

Puget Sound Area Study Team

Bonneville Power Administration, Puget Sound Energy, Seattle City Light, Snohomish County PUD, Tacoma Power, Powerex

Provisional Approval by the Study Team on April 25, 2011

Final Approval by the Study Team on October 28, 2011

Introduction and Conclusions

In October of 2010, the Puget Sound Area Study Team issued a report entitled "Transmission Expansion Plan for the Puget Sound Area." The report is available via the ColumbiaGrid website. The report details a transmission plan for the Puget Sound region that would, as a basic requirement, provides for reliable system performance while significantly improving the ability of the transmission grid to support power transfers between the Northwest and British Columbia. Since the release of the original report, the following changes have occurred that have led to the need for the Puget Sound Area Study Team to revise their transmission plan:

1) ***Additional scenarios*** – The Puget Sound area utilities have been meeting regularly since the publication of the original report in October 2010 and have developed several additional scenarios to be studied (e.g., the addition of a new Broad Street-Massachusetts 115 kV underground cable). In response, the study team repeated their prior analysis for the critical winter south-to-north condition for the new scenarios. The results of this analysis are shown in the table provided in Appendix A.

2) ***Increased likelihood that Puget Sound Energy will move forward with Sammamish-Lakeside-Talbot project*** – Since the development of the original plan, Puget Sound Energy has further developed their plan to rebuild two 115 kV lines to 230 kV (Sammamish-Lakeside-Talbot #1 and #2) and provide new 230/115 kV transformation at their Lakeside Substation. Although both lines will be rebuilt, only one of the lines may be initially energized at 230 kV. As stated in the prior report, this facility addition can delay the need to reconductor the Maple Valley-SnoKing 230 kV lines beyond the ten-year transmission planning horizon.

   The study team decided that since Puget Sound Energy is moving forward with this plan, the Sammamish-Lakeside-Talbot project should be listed as the proposed project in the plan instead of the Maple Valley-SnoKing reconductor. This project will give Puget Sound Energy the ability to provide necessary load support at Lakeside which cannot be achieved with the Maple Valley-SnoKing reconductor project, while providing similar Transmission Curtailment Risk Measure (TCRM) benefits as the Maple Valley-SnoKing reconductor project. A downside of the Sammamish-Lakeside-Talbot project is that its south-to-north Total Transfer Capability (TTC) is lower as compared to the Maple Valley-SnoKing reconductor. However, the Sammamish-Lakeside-Talbot project has additional benefits over the Maple Valley-SnoKing reconductor project in that it provides an additional 230 kV transmission path through the Puget Sound area and makes it feasible to reconductor rather than rebuild the Bothell-SnoKing 230 kV lines.

3) ***Increased likelihood that Seattle City Light will move forward with their North Downtown Substation Project*** – Since the development of the plan, Seattle City Light has indicated that plans to add a new North Downtown Substation have become more likely. The final plan is still being developed by SCL. The option studied includes a new underground cable (North Downtown-Massachusetts 230 kV), a new 115 kV line between North Downtown and Canal, and two 230/115 kV transformers at the proposed substation (see the following Figure One). This project was studied in the prior plan and, as identified previously, a third set of series inductors will be required on the new Canal-North Downtown 115 kV line with the addition of the North Downtown Substation. The plan for the system without, or prior to, the addition of the North Downtown Substation remains the same (adding series inductors on the two 115 kV underground cables). There is not a significant impact on the plan with or without the North Downtown Substation project as long as the project includes a third set of series inductors on the new North Downtown-Canal 115 kV line.

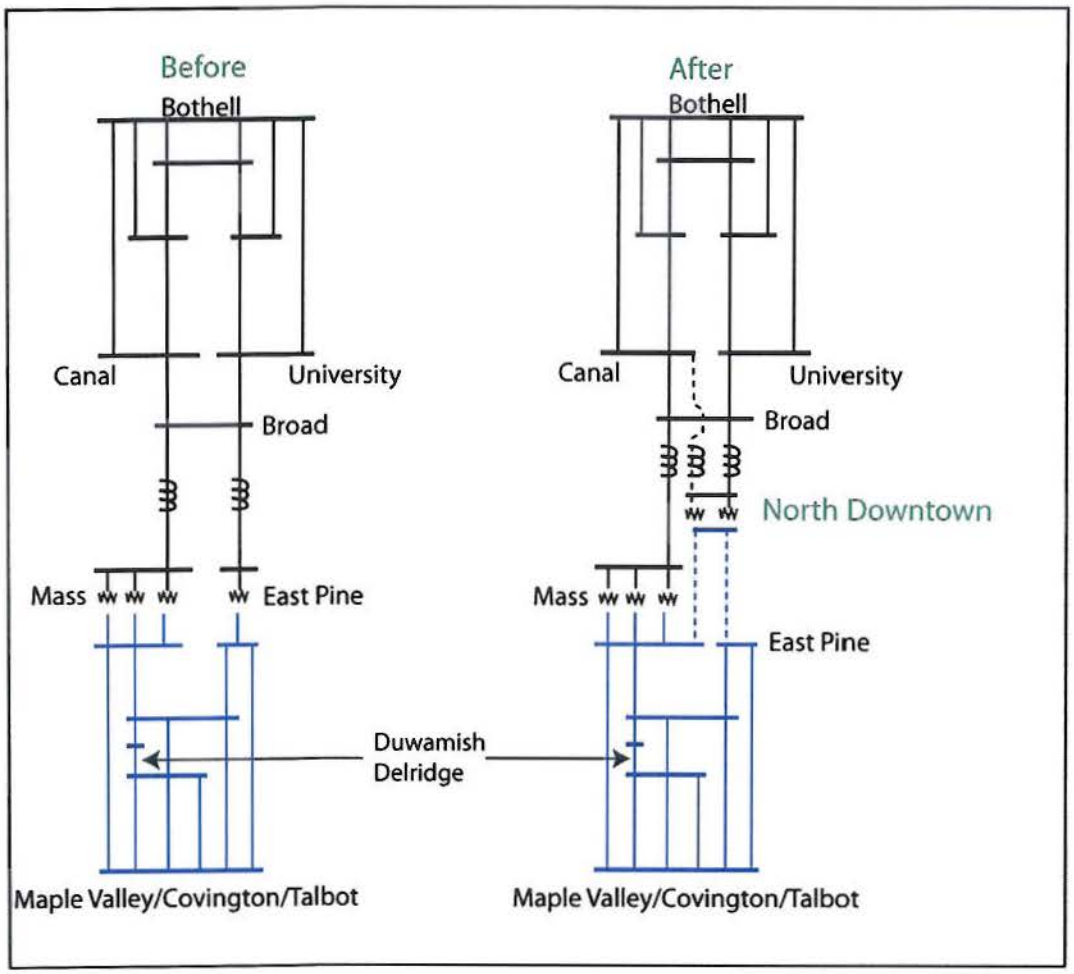

Figure One: One-Line Diagram with the proposed locations of the series inductor additions, before and after the Seattle City Light North Downtown Substation Project.

4) ***Seattle area line rating increases*** – Several key transmission lines in the region have been rerated to a higher capability. In some cases the new ratings provide a 77% increase over the ratings that were utilized in the original study. This has enabled the study team to reduce the size of the series inductors (from 26 ohms to 6 ohms) that were proposed for the Seattle City Light 115 kV transmission lines and cables. The smaller inductors lead to more power flowing through the Seattle City Light system resulting in the need to include an additional facility reconductor in the plan; the Duwamish-Delridge 230 kV line. The cost of this additional reconductor is estimated to be relatively low ($1.6 million). This additional cost is projected to be partially offset by the savings achieved by the installation of smaller inductors. The smaller inductors also reduce the need to add shunt capacitors to offset the reactive losses from the larger sized inductors.

5) ***Seattle City Light Update to TPS Settings*** - Seattle City Light has recently updated the TPS settings which have resulted in operational changes that preclude it from being used as a project in this study to reduce TCRM and increase TTC levels on the northern intertie. All results that use the previous scheme have not been included in this report.

As a result of the above changes, the plan to support south-to-north transfers has been revised as specified in this report. Additional transmission facilities, such as a second Portal Way 230/115 kV transformer, will likely be necessary to support north-to-south transfers. These additional facilities will be further analyzed in subsequent studies.

Overview of Revised Plan

As a result of the above changes, the Transmission Expansion Plan for the Puget Sound Area was revised and the new plan is shown in the following Figure Two:

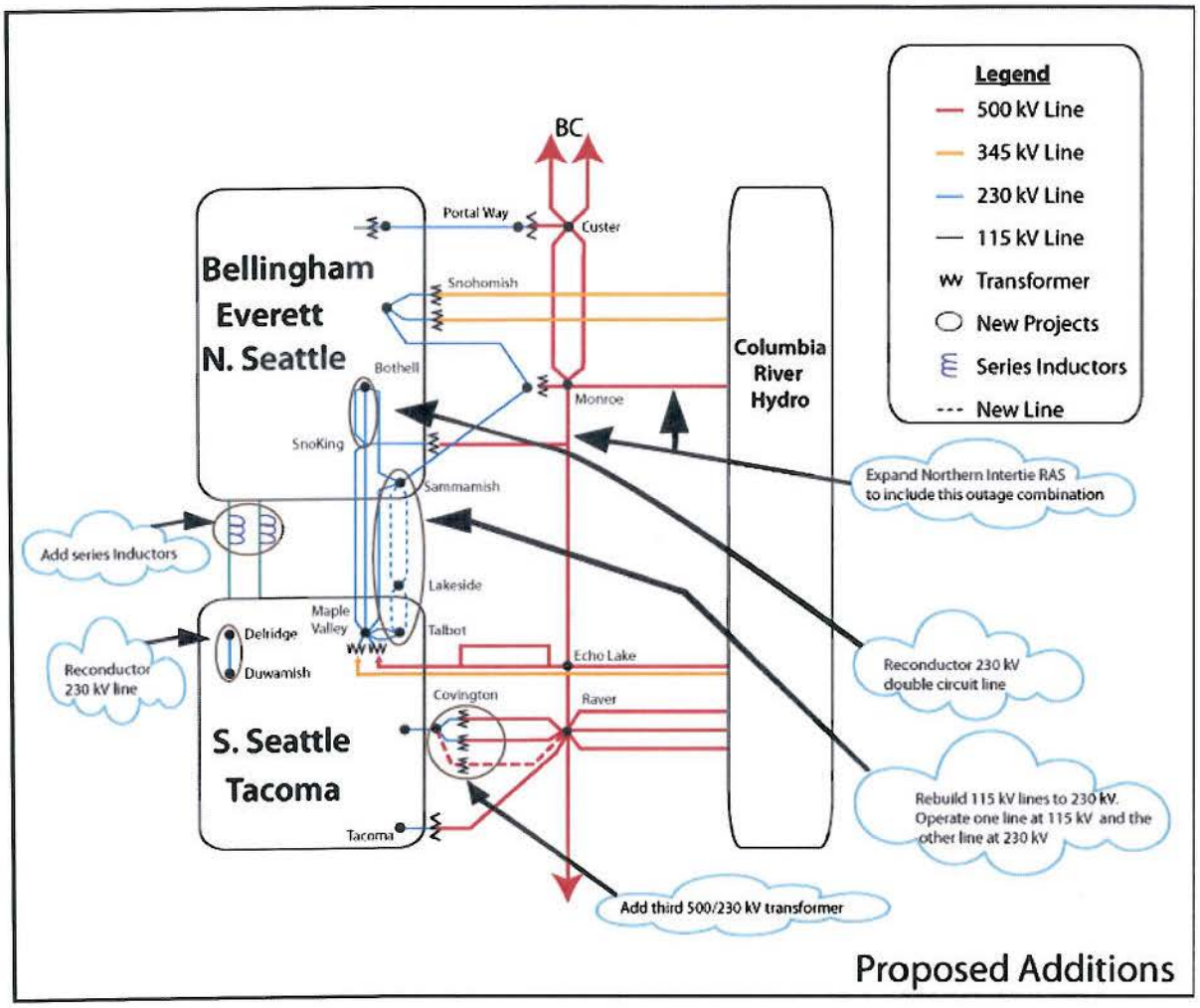

Figure Two: Revised Puget Sound Area Transmission Expansion Plan for Supporting South-to-North Transfers

Projects included in the Puget Sound Area Transmission Expansion Plan to support south-to-north transfers are:

- Reconductor the double circuit Bothell-SnoKing 230 kV lines with high temperature conductor
- Expand the Northern Intertie RAS
- Add a third Covington 500/230 kV transformer
- Reconductor the Delridge-Duwamish 230 kV line
- Add series inductors to the Massachusetts-Union-Broad and East Pine-Broad 115 kV lines in the downtown Seattle system. The final inductor size is under study and may vary from the 6 ohms specified in this report. Each line may have a different inductor size to optimize the system.
- Rebuild both the Sammamish-Lakeside-Talbot 115 kV lines to 230 kV. Energize one line at 230 kV and the other at 115 kV.

The cost estimates for the project in the preferred plan are shown in the following table. It should be noted that portions of the projects may be planned for local utility service and may not be necessary to accomplish the transfer capability goals of this study.

PSAST Preferred South-to-North Plan Cost Estimate	
	Cost Estimate (M)
Reconductor Bothell-SnoKing 230kV #1 & #2 with high temperature conductor	$3
Extend the Northern Intertie RAS to trip for the combined outage of the Chief Joseph-Monroe and Monroe-SnoKing-Echo Lake 500 kV lines	$3
Add a third Covington 500/230 kV transformer, a 500 kV terminal at Raver for the third Raver-Covington 500 kV line, and a 500 kV Bus at Covington	$60
Reconductor Delridge - Duwamish 230 kV Line with high temperature conductor	$2
6 ohm inductors on the two 115 kV cables out of SCL's Broad Street Substation	$13
Lakeside 230/115 kV transformer, rebuild both 115 kV Sammamish – Talbot lines to 230 kV energizing one line at 230 kV	$65
Total Preferred Projects	$146

* The majority of these estimates are preliminary estimates. More detailed estimates will be developed by the Puget Sound Area utilities.

Next Steps

Now that the overall south-to-north plan is complete, the individual transmission owners need to identify the parties responsible for each of the projects and agree on the cost allocation for the projects. After this has been completed, detailed feasibility studies, cost estimates, project timing, and schedules will be completed. In addition, the following project specific studies will be completed by the Puget Sound Area Study Team:

- North-to-South transfer conditions will be studied to determine the effect that the new preferred plan has on transfer capability and to determine if any additional projects are needed.
- Series Inductor Project: Studies need to be completed to determine the proper size for the series inductors, the impact on north-to-south transfers, and the preferred switching arrangement.
- Determine how long the proposed plan will last. The PSAST will grow the Northwest loads in the current 2020 base case to 2025 and 2030 load levels. The additional load will be served by eastern resources. TCRM and TTC values will be calculated to determine whether they may degrade over time.
- Northern Intertie RAS Expansion Project: The Puget Sound Area Study Team will be available to assist BPA and BC Hydro with any additional studies necessary to implement this RAS expansion.
- Covington Transformer Project: Additional studies will be completed by BPA, to further analyze alternative locations for this transformer addition, the need for a 500 kV switchyard at Covington, potential operational solutions, potential remedial action schemes, the size of the transformer, the impedance of the transformer, and the preferred connection to the 230 kV bus. The BPA studies will be coordinated with area utilities through the Puget Sound Area Study Team.

While the projects identified in this report improve the transfer capability through the Puget Sound Area, there remain curtailment risks for firm transfers during outage conditions (N-1-X). Consequently, the Puget Sound Area Study Team will continue to investigate cost effective ways to reduce the risk of firm curtailments.

Study Results

New winter south-to-north studies were completed for a variety of scenarios and the detailed study results are provided in Appendix A. The system performance for each scenario was compared using the following two measures in addition to cost and permitting feasibility:

1) ***Transmission Curtailment Risk Measure (TCRM):*** TCRM is a measure of the likelihood of experiencing curtailments of transfers between the Northwest and British Columbia. The higher the TCRM value the greater the exposure to curtailments. The TCRM analysis

includes the cases with all facilities in service as well as with any single facility out of service. A detailed description of the TCRM methodology is provided in the original report. In the original report, winter and summer conditions for both north-to-south and south-to-north transfers were studied. For this update, only winter conditions with south-to-north transfers were studied as that is the critical system state for the alternatives presented in this report.

2) ***Total Transfer Capability (TTC):*** The TTC (thermal only) of the Westside Northern Intertie (WSNI) was calculated for each of the options in the traditional way, with all lines in service. Only the winter south-to-north condition was studied, with 680 MW of generation operating in the Puget Sound Area. The specific generation unit assumptions are as described in Appendix J of the original report. Puget Sound Area generation during winter peak is between 950 MW and 1550 MW 80% of the time (when load has been greater than 6000MW along with temperature below 32 degrees F). With higher levels of Puget Sound Area generation, the TTC numbers shown in the tables would likely increase.

The major issues addressed in this study are the impacts of the various alternatives on the 115 kV system in the Seattle area, and the impacts of the various alternatives on the 230 kV system between the Maple Valley and SnoKing areas. In all cases, the other major projects as described in the original report are modeled, which include the Northern Intertie RAS expansion, third Covington transformer, and second Portal Way transformer. In addition, the Bothell-SnoKing rebuild project was included in most scenarios although sensitivity studies were conducted for the reconductor option which ended up being the preferred option. Provided below is a discussion of each of the major issues addressed by the study team and their conclusions.

1) 26 ohm versus 6 ohm series inductors

Table 1: Selected TCRM and TTC Results, 26 ohm inductors vs. 6 ohm inductors

Study #	Series Inductors on SCL's 115 kV Cables- 26 ohms	Series Inductors on SCL's 115 kV Cables- 6 ohms	Maple Valley-SnoKing High Temp	PSE's Sammamish - Lakeside - Talbot 115kV to 230kV Upgrade Project (Two Lines Operated at 230 kV)	Total TCRM - Without TCRM Lines Outside of the Puget Sound Area	Winter South North WSNI Thermal TTC at 680 MW Puget Sound Generation
3	X		X		10,304	2,270
4		X	X		8,433	2,297
17	X			X	10,460	1,773
18		X		X	8,666	2,038

With the changes in 115 kV line ratings, the Seattle 115 kV system is capable of accommodating greater flows. As a result, using a series inductor impedance greater than 6 ohms is no longer necessary to reduce the loadings on the Seattle 115 kV system. In fact, the TCRM is slightly better (lower) with the smaller 6 ohm inductors. Prior studies have also indicated that the smaller inductor size provided better results for summer north-to-south conditions. Higher impedance inductors also would have the undesirable effect of pushing more power over to the Maple Valley-SnoKing lines and reducing the TTC. In addition the smaller inductors require the addition of fewer shunt capacitors to offset the reactive losses from the inductors. The 6 ohm inductors have the effect of adding a circuit reactance that is equivalent to 8 miles of overhead 115 kV line. The 6 ohm inductors are now the preferred 115 kV project due to better performance and lower cost.

2) 6 ohm series inductors versus phase shifting transformers

Table 2: 6 ohm series inductors versus phase shifting transformers

Study #	SCL Phase Shifting Transformer	Series Inductors on SCL's 115 kV Cables- 6 ohms	Maple Valley-SnoKing High Temp	PSE's Sammamish - Lakeside - Talbot 115kV to 230kV Upgrade Project (Two Lines Operated at 230 kV)	Total TCRM - Without TCRM Lines Outside of the Puget Sound Area	Winter South North WSNI Thermal TTC at 680 MW Puget Sound Generation
1	X		X		13,122	2,455
4		X	X		8,433	2,297
15	X			X	11,500	2,136
18		X		X	8,666	2,038

The TCRM studies for the phase shifting transformer project may not reflect the true performance of this project due to the difficulty of accurately modeling the phase shifting transformer operating strategy. As a result, while the TCRM studies show poorer performance for the phase shifting transformers than for the series inductor project, the study team believes that this result is a shortcoming of the phase shifter modeling and, in fact, the phase shifters should perform as well or better than the series inductors. This was the conclusion of the TTC studies, where a benefit was observed when using the phase shifting transformers instead of fixed series inductors. However, as the incremental benefits are not believed to be sufficient to justify the higher capital and maintenance costs of the phase shifter option, the 6 ohm series inductors remain the recommended project.

3) 6 ohm series inductors versus adding a third 115 kV cable

Table 3: 6 ohm inductor versus adding a third 115 kV cable

Study #	Series Inductors on SCL's 115 kV Cables- 6 ohms	3rd 115 kV Underground Cable from Mass to Broad Street & Mass Bank 1 Energized	Maple Valley-SnoKing High Temp	PSE's Sammamish - Lakeside - Talbot 115kV to 230kV Upgrade Project (Two Lines Operated at 230 kV)	Total TCRM - Without TCRM Lines Outside of the Puget Sound Area	Winter South North WSNI Thermal TTC at 680 MW Puget Sound Generation
4	X		X		8,433	2,297
5		X	X		19,027	1,513
18	X			X	8,666	2,038
19		X		X	11,213	2,297

This option examines adding a third Seattle City Light 115 kV underground cable (a second cable from Broad Street to Massachusetts) in place of the 6 ohm inductors. The results for this alternative vary depending on whether the Sammamish-Lakeside-Talbot lines are upgraded to 230 kV or the Maple Valley-SnoKing lines are reconductored. With the preferred plan (upgrading the Sammamish-Lakeside-Talbot lines to 230 kV), there is a benefit to the alternative of adding a third cable from a TTC perspective and a slight benefit to the series inductor option from the TCRM perspective. Conversely, if the Maple Valley-SnoKing reconductor project moves forward, the series inductor option performs better from both a TCRM and TTC perspective. This is because if a third cable is added, there is still a need for the series inductors to eliminate overloading on the Broad Street-East Pine 115 kV cable, the East Pine-Maple Valley 230 kV line, and the Massachusetts 230/115 kV transformers. The third cable option is deemed to be less preferable to the recommended option primarily because the cost of the third cable is expected to far exceed the cost of the series inductors. In addition, the construction of an additional Broad-Massachusetts 115 kV cable is incompatible with Seattle City Light's future plan to add a new 230 kV cable as part of their North Downtown Substation

Project (North Downtown-Massachusetts 230 kV). The 6 ohm series inductors remain the preferred project due to better performance and lower cost.

4) ***6 Ohm Series inductors versus replacing cables***

Table 4: 6 ohm inductors versus replacing cables

Study #	Series Inductors on SCL's 115 kV Cables- 6 ohms	Replace SCL's Existing 115 kV Cables (no inductors)	Maple Valley-SnoKing High Temp	PSE's Sammamish - Lakeside - Talbot 115kV to 230kV Upgrade Project (Two Lines Operated at 230 kV)	Total TCRM - Without TCRM Lines Outside of the Puget Sound Area	Winter South North WSNI Thermal TTC at 680 MW Puget Sound Generation
4	X		X		8,433	2,297
6		X	X		19,398	1,602
18	X			X	8,666	2,038
20		X		X	11,746	2,210

If the 6 ohm inductors are in place, potential overloading on the cables is no longer an issue so rebuilding the cables would have no benefit. This option examines rebuilding the cables in lieu of the 6 ohm inductors. The results for this alternative vary depending on whether the Sammamish-Lakeside-Talbot lines are upgraded to 230 kV or the Maple Valley-SnoKing lines are reconductored. With the preferred plan (upgrading the Sammamish-Lakeside-Talbot lines to 230 kV), the series inductors perform better from a TCRM perspective and slightly worse from a TTC perspective. If the Maple Valley-SnoKing reconductor project moves forward then the series inductor option performs better from both a TCRM and TTC perspective. The TCRM performance is better for the series inductor options because if the cables are replaced, there would be other limits reached on the downtown Seattle system. The additional limits reached that account for most of the TCRM increase include the East Pine 230/115 kV transformer and the Massachusetts 230/115 kV transformers. The series inductors remain the preferred project due to better performance and lower cost.

5) 6 ohm *series inductors versus the Seattle City Light North Downtown Substation project with and without series inductors*

Table 5: 6 ohm inductors versus the Seattle City Light North Downtown Substation project with and without series inductors

Study #	Series Inductors on SCL's 115 kV Cables- 6 ohms	SCL's North Downtown Substation	SCL's North Downtown Substation (6 ohm inductors)	Maple Valley-SnoKing High Temp	PSE's Sammamish - Lakeside - Talbot 115kV to 230kV Upgrade Project (Two Lines Operated at 230 kV)	Total TCRM - Without TCRM Lines Outside of the Puget Sound Area	Winter South North WSNI Thermal TTC at 680 MW Puget Sound Generation
4	X			X		8,433	2,297
32		X		X		117,049	-1,380
36			X	X		8,778	2,672
18	X				X	8,666	2,038
34		X			X	38,594	-832
38			X		X	9,101	2,207

The study results indicate that the TCRM would increase dramatically and the TTC would be negative (not capable of south-to-north transfers) unless the series inductors are included in the plans for the new North Downtown Substation. The majority of this increase is due to overloading on the Broad-North Downtown 115 kV cable. As a result, the series inductors are needed before and after the addition of the North Downtown Substation Project.

6) **6 ohm series inductors:** ***Reinforcing Maple Valley–SnoKing 230 kV lines versus options to upgrade Sammamish-Lakeside-Talbot 115 kV lines versus Monroe-Echo Lake #2***

Table 6: 6 ohm inductors – Reinforcing Maple Valley–SnoKing 230 kV lines versus options to upgrade Sammamish-Lakeside-Talbot 115 kV lines versus Monroe-Echo Lake #2

Study #	Series Inductors on SCL's 115 kV Cables- 6 ohms	Maple Valley-SnoKing High Temp	Maple Valley-SnoKing Rebuild	PSE's Sammamish - Lakeside - Talbot 115kV to 230kV Upgrade Project (Two Lines Operated at 230 kV)	PSE's Sammamish - Lakeside - Talbot 115kV to 230kV Upgrade Project (One Line Operated at 230 kV)	Monroe-Echo Lake #2 500kV	Total TCRM - Without TCRM Lines Outside of the Puget Sound Area	Winter South North WSNI Thermal TTC at 680 MW Puget Sound Generation
4	X	X					8,433	2,297
11	X		X				7,623	2,632
18	X			X			8,666	2,038
28	X	X		X			9,003	2,700
81	X				X		13,422	1,643
80	X					X	5,047	2,875

The lowest TCRM and the highest TTC for line improvements east of Lake Washington can be achieved by building the Monroe-Echo Lake #2 500 kV line in addition to the 6 ohm series inductors. Unfortunately, this is also the highest cost transmission option.

From a TCRM perspective there is little difference between the Maple Valley – SnoKing reinforcement options and the Sammamish – Lakeside – Talbot upgrade project with two lines operated at 230 kV although the Maple Valley-SnoKing rebuild option performs slightly better than the others. From a TTC perspective, there is an advantage for the Maple Valley-SnoKing options; particularly the rebuild option. However, this was not deemed to be a sufficient advantage over the preferred Sammamish-Lakeside-Talbot 230 kV upgrade project with two lines operated at 230 kV. A major benefit of the Sammamish-Lakeside-Talbot options is that

they would provide necessary load service to Lakeside Substation which the Maple Valley-SnoKing options would not. Pursuing the Sammamish-Lakeside-Talbot options at this time does not preclude reconductoring the Maple Valley-SnoKing lines at a later time.

The Sammamish – Lakeside – Talbot upgrade project can defer some of its substation construction costs by initially upgrading the 115 kV lines to 230 kV and operating one line at 115 kV and one line at 230 kV. This option did not perform as well as operating both lines at 230 kV for both TCRM and TTC. The reduction in performance has been deemed acceptable for the cost savings. The second line planned to be cut-over to 230 kV operation at a later date.

7) **6 ohm series inductors and Sammamish-Lakeside-Talbot upgrade:** ***Bothell-SnoKing rebuild versus reconductor***

Table 7: 6 ohm series inductors and Sammamish-Lakeside-Talbot upgrade: Bothell-SnoKing rebuild versus reconductor

Study #	Series Inductors on SCL's 115 kV Cables- 6 ohms	PSE's Sammamish - Lakeside - Talbot 115kV to 230kV Upgrade Project (Two Lines Operated at 230 kV)	PSE's Sammamish - Lakeside - Talbot 115kV to 230kV Upgrade Project (One Line Operated at 230 kV)	Bothell - SnoKing Rebuild	Bothell - SnoKing High Temp Instead of Rebuild	Total TCRM - Without TCRM Lines Outside of the Puget Sound Area	Winter South North WSNI Thermal TTC at 680 MW Puget Sound Generation
18	X	X		X		8,666	2,038
47	X	X			X	9,512	2,086
81	X		X	X		13,422	1,643
82	X		X		X	13,663	1,677

For either Sammamish – Lakeside – Talbot upgrade option the TCRM and TTC results are similar for the Bothell-SnoKing rebuild and reconductoring options. The reconductor of the Bothell-SnoKing lines would provide acceptable performance at a lower cost with minimal permitting and mitigation requirements.

Appendix A

Table of TCRM and TTC Results

ColumbiaGrid PSAST Options for N-1-X TCRM Determination

	115 kV Reinforcement Options									230 kV & 500 kV Reinforcement Options							TCRM & TTC Values		
Study #	SCL Phase Shifting Transformer	Series Inductors on SCL's 115 kV Cables- 26 ohms	Series Inductors on SCL's 115 kV Cables- 6 ohms	3rd 115 kV Underground Cable from Mass to Broad Street & Mass Bank 1 Energized	Replace SCL's Existing 115 kV Cables (no inductors)	Replace SCL's Existing 115 kV Cables (6 ohm inductors)	SCL's North Downtown Substation	SCL's North Downtown Substation (6 ohm inductors)	Maple Valley-SnoKing High Temp	Maple Valley-SnoKing Rebuild	PSE's Sammamish - Lakeside - Talbot 115kV to 230kV Upgrade Project (Two Lines Operated at 230 kV)	PSE's Sammamish - Lakeside - Talbot 115kV to 230kV Upgrade Project (One Line Operated at 230 kV)	Monroe-Echo Lake #2 500kV	Bothell - SnoKing High Temp Instead of Rebuild	With Covington, Portalway, Extended RAS, Bothell - SnoKing Upgrade	Total TCRM - Without TCRM Lines Outside of the Puget Sound Area	TTC (Thermal Only)	Notes
54																308,343	-	PSAST 2020 Winter South-to-North Expansion Plan Base Case
24															X	73,898	920	
1	X								X						X	13,122	2455	
3		X							X						X	10,304	2270	
4			X						X						X	8,433	2297	
5				X					X						X	19,027	1513	
6					X				X						X	19,398	1602	
7						X			X						X	8,258	2448	
32							X		X						X	117,049	-1380	
36								X	X						X	8,778	2672	
8	X									X					X	14,039	2692	
10		X								X					X	12,659	2652	
11			X							X					X	7,623	2632	
12				X						X					X	13,172	1820	
13					X					X					X	13,012	2120	
14						X				X					X	7,423	2664	
33							X			X					X	82,697	-1350	
37								X		X					X	7,111	2708	
15	X										X				X	11,500	2136	
17		X									X				X	10,460	1773	
18			X								X				X	8,666	2038	
81			X									X			X	13,422	1643	
47			X								X			X	X	9,512	2086	
82			X									X		X	X	13,663	1677	Preferred Plan
19				X							X				X	11,213	2297	
20					X						X				X	11,746	2210	
21						X					X				X	8,666	2044	
34							X				X				X	38,594	-832	
38								X			X				X	9,101	2207	
49								X			X			X	X	10,286	2233	
25	X								X		X				X	9,664	2745	
27		X							X		X				X	9,288	2497	
28			X						X		X				X	9,003	2700	
29				X					X		X				X	11,460	2305	
30					X				X		X				X	12,395	2377	
31						X			X		X				X	9,003	2700	
35							X		X		X				X	38,463	-804	
39								X	X		X				X	9,296	2732	
56								X	X		X			X	X	10,285	2753	
22													X		X	13,501	2104	
40							X						X		X	46,466	-292	
41								X					X		X	4,143	2916	
80			X										X		X	5,047	2875	

EXHIBIT B
NOTICES

Any notice required under this MOA shall be in writing and shall be delivered in person; or with proof of receipt by a nationally recognized delivery service or by United States Certified Mail. Notices are effective when received. Either Party may change the name or address for receipt of notice by providing notice of such change. The Parties shall deliver notices to the following person and address:

If to Seattle City Light:

Attention:
Phone:
Fax:
Email:

If by First Class Mail:

City of Seattle, City Light Department
(Customer Address)
(Customer City, State, Zip)

If by Overnight Delivery Service:
City of Seattle, City Light Department
(Customer Address)
(Customer City, State, Zip)

If to BPA:

Attention:
Phone:
Fax:
Email:

If by First Class Mail:

Bonneville Power Administration
P.O. Box 61409
Vancouver, WA 98666-1409

If by Overnight Delivery Service:
Bonneville Power Administration – TSE/TPP-2
7500 NE 41st Street – Suite 130
Vancouver, WA 98662

If to the Puget:

Attention:
Phone:
Fax:
Email:

If by First Class Mail:

Puget Sound Energy, Inc.
P.O. Box 97034
Bellevue, WA 98009-9734

If by Overnight Delivery Service:
Puget Sound Energy, Inc.
10885 N.E. 4th Street, Suite 1100
Bellevue, WA 98004-5591

Department of Energy

Bonneville Power Administration
P.O. Box 61409
Vancouver, WA 98666-1409

TRANSMISSION SERVICES

July 22, 2014

In reply refer to: TSE/TPP-2

Contract No. 14TX-16053
Letter Agreement

Ms. Booga Gilbertson
Vice President, Operations Services
Puget Sound Energy, Inc.
10885 NE 4th Street, PSE – 11S
Bellevue, WA 98004

Mr. Phillip West
Customer Service Energy Officer
City of Seattle, City Light Department
700 Fifth Avenue, Suite 2822
Seattle, WA 98104-5031

Dear Ms. Gilbertson and Mr. West:

The Bonneville Power Administration (BPA), Puget Sound Energy, Inc, (PSE) and City of Seattle, City Light Department (SCL) are parties to the Memorandum of Agreement (MOA), Contract No. 11TX-15450, relating to the Preferred Puget Sound Area Plan of Service Projects and Cost Allocation. The parties to the MOA are currently in the initial stages of development of the projects described in the MOA. As this has progressed, certain aspects of the MOA were identified that the parties believe need to be clarified.

This Agreement is intended to clarify the scope changes related to the Covington 500 kV Transformer Addition Project described in Section 3(a) of the MOA and the Bothell to SnoKing Reconductor Project described in Section 3(c) of the MOA.

BPA's transformer addition originally planned for Covington Substation has been moved to Raver Substation. There is no change in financial responsibility under the MOA due to this relocation.

The Bothell to SnoKing Reconductor Project was identified in the MOA as an SCL project. However, during subsequent discussions it was discovered that BPA owns the first ½ mile of these lines on the SnoKing end. BPA will rebuild its owned portion of these lines at its cost, including any necessary replacement of equipment within SnoKing Substation associated with these lines.

In order to meet the project schedule, please sign all originals of this Agreement, retain one original for your records and return the remaining two originals to my attention at one of the following addresses at your earliest convenience, but not later than Close of Business on August 30, 2014:

First Class Mail	Overnight Delivery Service
Bonneville Power Administration Mail Stop: TSE/TPP-2 P.O. Box 61409 Vancouver, WA 98666-1409	Bonneville Power Administration Mail Stop: TSE/TPP-2 7500 NE 41st Street – Suite 130 Vancouver, WA 98662

BPA will ensure that Puget and SCL have a full set of original signature pages.

If you have any questions, please call me at (360) 619-6015.

Sincerely,

Toni L. Timberman
Senior Transmission Account Executive
Transmission Sales

CONCUR:

PUGET SOUND ENERGY, INC.

By: _____

Name: _____
(Print/Type)

Title: _____

Date: _____

CITY OF SEATTLE,
CITY LIGHT DEPARTMENT

By: _____

Name: _____
(Print/Type)

Title: _____

Date: _____

bcc:
C. Olsen– KSC-TPP-1
B. Bennett – LT-7
J. Weiss – TPCV/COVINGTON
T. Timberman – TSE/TPP-2
P. Gibson – TSES/TPP-2
Customer File – TS/-TPP-2 (TM-11, Puget Sound Energy, Inc.)
Customer File – TSE/TPP-2 (TM-11, City of Seattle, City Light Department.)
Official File – CCM Support

(W:\CT\Puget Sound Energy, Inc\Drafts\16053_PSE-SCL-PSANI MOA SCOPE CHANGE LTR AGMT.Doc)

Department of Energy

Bonneville Power Administration
P.O. Box 61409
Vancouver, WA 98666-1409

TRANSMISSION SERVICES

August XX, 2014

In reply refer to: TSE/TPP-2

Contract No. 14TX-16054
Letter Agreement

Ms. Booga Gilbertson, Vice President,
Operations Services
Puget Sound Energy, Inc.
10885 NE 4th Street, PSE – 11S
Bellevue, WA 98004

Dear Ms. Gilbertson:

The Bonneville Power Administration (BPA), Puget Sound Energy, Inc, (PSE) and City of Seattle, City Light Department (SCL) are parties to the Memorandum of Agreement (MOA), Contract No. 11TX-15450, relating to the Preferred Puget Sound Area Plan of Service Projects and Cost Allocation. The parties to the MOA are currently in the initial stages of development of the projects described in the MOA. As this has progressed, certain aspects of the MOA were identified that the parties believe need to be clarified.

This Agreement is intended to clarify the use of BPA funds contributed toward the adjusted projected capital cost of the Puget Preferred Plan Projects described in Sections 4(c) and 5(a) of the MOA.

The parties acknowledge that BPA is not involved in any manner or capacity in PSE's Sammamish to Lakeside to Talbot Rebuild Project and agree that no BPA funds provided under the MOA will be allocated to PSE's Sammamish to Lakeside to Talbot Rebuild Project. Instead, all BPA funds under the MOA will be allocated to PSE's Lakeside 230 kV Transformer Addition Project as well as the other BPA and SCL Preferred Plan Projects identified in the MOA.

In order to meet the project schedule, please sign both originals of this Agreement, retain one original for your records and return the remaining original to my attention at one of the following addresses at your earliest convenience, but not later than Close of Business on
August 30, 2014:

<u>First Class Mail</u>

Bonneville Power Administration
Mail Stop: TSE/TPP-2
P.O. Box 61409
Vancouver, WA 98666-1409

<u>Overnight Delivery Service</u>

Bonneville Power Administration
Mail Stop: TSE/TPP-2
7500 NE 41st Street – Suite 130
Vancouver, WA 98662

If you have any questions, please call me at (360) 619-6015.

Sincerely,

Toni L. Timberman
Senior Transmission Account Executive
Transmission Sales

CONCUR:

PUGET SOUND ENERGY, INC.

By: _____

Name: _____
(Print/Type)

Title: _____

Date: _____

bcc:

C. Olsen– KSC-TPP-1
B. Bennett – LT-7
J. Weiss – TPCV/COVINGTON
T. Timberman – TSE/TPP-2
P. Gibson – TSES/TPP-2
Customer File – TS/-TPP-2 (TM-11, Puget Sound Energy, Inc.)
Customer File – TSE/TPP-2 (TM-11, City of Seattle, City Light Department.)
Official File – CCM Support

(W:\CT\Puget Sound Energy, Inc\Drafts\16054_PSE_USE OF FUNDS.Doc)

Department of Energy

Bonneville Power Administration
P.O. Box 61409
Vancouver, WA 98666-1409

TRANSMISSION SERVICES

August XX, 2014

In reply refer to: TSE/TPP-2

Contract No. 14TX-16060
Letter Agreement

Ms. Booga Gilbertson
Vice President Operations Services
Puget Sound Energy, Inc.
P.O. Box 90868
Bellevue, WA 98009-0868

Mr. Phillip West
Customer Service Energy Officer
City of Seattle, City Light Department
700 Fifth Ave., Suite 2822
Seattle, WA 98104-5031

Dear Ms. Gilbertson and Mr. West:

The Bonneville Power Administration (BPA), Puget Sound Energy, Inc., (PSE) and City of Seattle, City Light Department (SCL) are parties to the Memorandum of Agreement (MOA), Contract No. 11TX-15450, relating to the Preferred Puget Sound Area Plan of Service Projects and Cost Allocation. The parties to the MOA are currently in the initial stages of development of the projects described in the MOA. As this has progressed, certain aspects of the MOA were identified that the parties believe need to be clarified.

This Agreement is intended to clarify BPA's obligations under the National Environmental Policy Act (NEPA) for its role in the MOA, as described in Section 8 of the MOA, as well as the nature of the Preferred Plan Projects described in the MOA for the purposes of NEPA.

With respect to environmental compliance BPA, as a Federal agency, has certain obligations and responsibilities under NEPA and other federal laws (collectively the NEPA review process) that it must fulfill before it can make a final decision concerning whether to participate in implementation of certain of the Preferred Plan Projects described in Section 3 of the MOA and the capital cost allocation described in Sections 4 and 5 of the MOA. Nothing in the MOA shall be construed as obligating or committing BPA to make a final decision concerning any of the Preferred Plan Projects and capital cost allocation before completing the NEPA review process. In addition, BPA reserves the right to determine the appropriate NEPA and other environmental compliance strategies for its actions under the MOA, and to choose any alternatives considered in the NEPA process, including the no-action alternative.

Furthermore, the parties acknowledge and agree that while the MOA identifies a number of Preferred Plan Projects to be undertaken by the parties, each of these projects could proceed independently from the others and that no single project is contingent or dependent upon another in the goal of relieving transmission congestion in the Puget Sound Area. As such, BPA, SCL, and PSE may elect to conduct separate environmental reviews for each project identified in the MOA.

In order to meet the project schedule, please sign all originals of this Agreement, retain one original for your records and return the remaining two originals to my attention at one of the following addresses at your earliest convenience, but not later than Close of Business on August x, 2014:

Formatted: Font: 11 pt

Formatted: Font: 11 pt

First Class Mail	Overnight Delivery Service
Bonneville Power Administration	Bonneville Power Administration
Mail Stop: TSE/TPP-2	Mail Stop: TSE/TPP-2
P.O. Box 61409	7500 NE 41st Street – Suite 130
Vancouver, WA 98666-1409	Vancouver, WA 98662

BPA will ensure that Puget and SCL have a full set of original signature pages.

Please do not hesitate to contact Justin Moffett at (503) 230-3233 or me at (360) 619-6015 if you would like to discuss this information.

Sincerely,

Toni L. Timberman
Senior Transmission Account Executive
Transmission Sales

CONCUR:

Formatted: Font: Times New Roman

PUGET SOUND ENERGY, INC.

By: _____

Name: _____
(Print/Type)

Title: _____

Date: _____

CITY OF SEATTLE,
CITY LIGHT DEPARTMENT

By: _____

Name: _____
(Print/Type)

Title: _____

Date: _____

Department of Energy

Bonneville Power Administration
P.O. Box 61409
Vancouver, WA 98666-1409

TRANSMISSION SERVICES

~~July 3~~August X, 2014

In reply refer to: TSE/TPP-2

Contract No. 14TX-16062
Letter Agreement

Ms. Booga Gilbertson	Mr. Phillip West
Vice President, Operations Services	Customer Service Energy Officer
Puget Sound Energy, Inc.	City of Seattle, City Light Department
10885 NE 4th Street, PSE – 11S	700 Fifth Avenue, Suite 3200
Bellevue, WA 98004	Seattle, WA 98104-5031

Dear Ms. Gilbertson and Mr. West:

The Bonneville Power Administration (BPA), the City of Seattle, City Light Department (SCL) and Puget Sound Energy, Inc. (PSE) are parties to the Memorandum of Agreement (MOA), Contract No. 11TX-15450, relating to the Preferred Puget Sound Area Plan of Service Projects and Cost Allocation. The parties to the MOA are currently in the initial stages of development of the projects described in the MOA. As this has progressed certain aspects of the MOA were identified that the parties believe need to be clarified.

This Letter Agreement is to meet the requirement in Section 7, Payment Schedule, of the MOA, which states that "The Parties shall agree in writing to the method and schedule for the cost share contributions to be made under this MOA."

BPA, Puget and Seattle agree that waiting until the completion of a project before exchanging funds (as specified in Section 7) is not the preferred course of action, given the potential for multiple years delay for completion of a project. An alternative arrangement is described below.

The following Financial Terms and Conditions shall apply to all cost sharing obligations incurred under the MOA:

FINANCIAL TERMS AND CONDITIONS STATEMENT

Each Party's cost obligation for performance of the duties associated with construction of each Preferred Plan Project shall be as specified in Sections 4 and 5 of the MOA. The cost of performing the duties associated with construction of each Preferred Plan Project shall be the actual cost of doing the work plus an overhead rate of xx% for labor and yy% for materials-,

Comment [TLT1]: Specify separate overheads for each Party?

DRAFT

representing the indirect costs of the project office plus the contractual support costs of contract negotiation, billing and accounting functions, and contract management.

Payments made to BPA shall be held in an account established for this Agreement. If BPA needs additional funds to complete the work at any time during performance of the project, BPA may request, in writing, for PSE to advance such additional funds to BPA for deposit in the account. PSE shall advance such additional funds within 30 days of BPA's written request, and BPA may temporarily stop work until PSE supplies the requested funds. If PSE does not advance such additional funds by the due date or, if at any time before completion of the project PSE elects to stop work under this Agreement, BPA will cease all work and restore, as a cost to the project at PSE's expense, government facilities and/or records (1) to their condition prior to the beginning of work under this Agreement, or (2) to some other mutually agreeable condition.

Within a reasonable time after completion of the project BPA shall make a full accounting to PSE showing the actual costs charged against the account. BPA shall either remit any unexpended balance in the account to PSE or bill for any costs in excess of the deposits in the account. PSE shall pay any excess costs within 30 days of the billing.

Payments not received within 30 days of the invoice date will accrue interest on the amount due from the invoice date to the date paid, at an annual interest rate equal to the higher of i) the prime rate (as reported in the Wall Street Journal in the first issue published during the month in which payment by PSE is due) plus 4 percent; or ii) such prime rate multiplied by 1.5.

- Language if cost is exceeding estimate in MOA –
- Periodic (every six months?) update on status of project and where it stands with respect to estimated cost
- Provisions for each party to invoice the others
- And???

Formatted: Bulleted + Level: 1 + Aligned at: 0.04" + Indent at: 0 29"

Formatted: Bulleted + Level: 1 + Aligned at: 0.04" + Indent at: 0 29"

Formatted: List Paragraph, No bullets or numbering

Formatted: Bulleted + Level: 1 + Aligned at: 0.04" + Indent at: 0 29"

Formatted: List Paragraph, No bullets or numbering

Formatted: Bulleted + Level: 1 + Aligned at: 0.04" + Indent at: 0 29"

Formatted: List Paragraph, No bullets or numbering

Please sign all three originals of this Agreement where indicated, returning two originals to BPA one of the addresses listed below at one of the following addresses. The remaining original is for your records. BPA will ensure that Puget and SCL have a full set of original signature pages.

In order to meet the project schedule, the executed Agreement must be received by ~~c~~Close of ~~b~~Business (COB) August 1, 2014. If BPA does not receive the executed Agreement by COB August 1, 2014, this offer Letter Agreement will be considered withdrawn.

First Class Mail	Overnight Delivery Service
Bonneville Power Administration	Bonneville Power Administration
Mail Stop: TSE/TPP-2	Mail Stop: TSE/TPP-2
P.O. Box 61409	7500 NE 41st Street – Suite 130
Vancouver, WA 98666-1409	Vancouver, WA 98662

DRAFT

If you have any questions, please call me at (360) 619-6015.

Sincerely,

Toni L. Timberman
Senior Transmission Account Executive
Transmission Sales

CONCUR:

PUGET SOUND ENERGY, INC.

By: _____

Name: _____
(Print/Type)

Title: _____

Date: _____

CITY OF SEATTLE,
CITY LIGHT DEPARTMENT

By: _____

Name: _____
(Print/Type)

Title: _____

Date: _____

DRAFT

bcc:
R. Shier – FRG-2
P. Walters – FRG-2
B. Bennett – LT-7
C. Hamel – TEP/TPP-1
S. Kannan – TFB/DOB-1
J. Jusupovic – TPC/TPP-4
D. Sauer – TPCC/TPP-4
T. Van Cleave – TPCC/TPP-4
J. Brank – TPCV/OLYMPIA
P. Fiedler – TPCV/TPP-4
T. Timberman – TSE/TPP-2
P. Gibson – TSES/TPP-2
Customer File – TPC/TPP-4 (ED-21-11/Tacoma Power)
Customer File – TSE/TPP-2 (TM-11/Tacoma Power)
PWA File – TPC/TPP-4 (N0310/Latest Status)
Official File – CCM_Support (Agreement 14TP-10657)

DRAFT

From:	Timberman,Toni L (BPA) - TSE-TPP-2
To:	Juj,Hardev S (BPA) - TP-DITT-2
Cc:	Jusupovic,Jana D (BPA) - TPC-TPP-4; Fiedler,Paul A (BPA) - TG-DITT-2; Moditz,Tina (BPA) - TP-DITT-2
Subject:	draft PSANI MOA letters for discussion Thursday
Date:	Wednesday, August 20, 2014 1:28:00 PM
Attachments:	11TX-15450_CT_PDF.pdf 16053_PSANI_MOA_SCOPE_CHANGE_LTR_AGMT.doc 16054_PSANI_MOA_USE_OF_FUNDS_LTR_AGMT.doc 16060_PSANI_MOA_NEPA_LTR_AGMT_8_8_TT.doc 16062_PSANI_MOA_Financial_Terms_and_Conditions.doc

---

Hi Hardev,

Attached are the four draft PSANI MOA letters for our discussion tomorrow. I also attached the MOA for your reference.

Note that the letter agreement related to how/when money changes hands is very draft, with BPA staff working to develop the language. Once the draft for that one is done we can schedule a conf. call with the customers to work out the details.

The other three look pretty good and have passed BPA legal review. They also have been reviewed by BPA environmental staff and the project manager.

All four drafts have been sent to Puget and Seattle for their first review.

We will be discussing these letters during our noon meeting with you tomorrow, including determining who will sign the letters once they have been through the review and approval process.

Toni

Contract No. 11TX-15450

MEMORANUDUM OF AGREEMENT

executed by the

UNITED STATES OF AMERICA

DEPARTMENT OF ENERGY

acting by and through the

BONNEVILLE POWER ADMINISTRATION

and

THE CITY OF SEATTLE

acting by and through its

CITY LIGHT DEPARTMENT

and

PUGET SOUND ENERGY, INC.

(Relating to the Preferred Puget Sound Area Plan of Service Projects and Cost Allocation)

This MEMORANDUM OF AGREEMENT (MOA) is executed by the UNITED STATES OF AMERICA, Department of Energy, acting by and through the BONNEVILLE POWER ADMINISTRATION (BPA), THE CITY OF SEATTLE, acting by and through its CITY LIGHT DEPARTMENT (Seattle City Light), and PUGET SOUND ENERGY INC. (Puget). BPA, Seattle City Light, and Puget are sometimes referred to individually as "Party" and collectively as "Parties".

WHEREAS, BPA owns and is responsible for the reliable operation of the Federal Columbia River Transmission System (FCRTS),

WHEREAS, Seattle City Light and Puget each own and operate electric systems that are interconnected with the FCRTS in the Puget Sound Area and electric power is delivered within those electric systems, and to or from them by BPA over the FCRTS,

WHEREAS, the Puget Sound Area experiences periods of transmission congestion that may require mitigation to maintain reliable operation of the Puget Sound Area Interconnection, including in some cases, curtailments of firm transmission service,

WHEREAS, as of February 2011, the Parties entered into Contract No. 11TX-15290, "Temporary Operational Support Program Agreement," that provides for voluntary changes in planned generation, including an increase in Puget Sound Area generation, as temporary and short-term measures for relieving forecasted transmission congestion conditions that are expected to adversely affect the reliable operation of the Puget Sound Area Interconnection,

WHEREAS, representatives from each of the Parties and other entities participated in regional studies to develop a long term plan, and implement a range of physical improvements to preserve the reliable operation of the Puget Sound Area interconnection, and reduce the need to curtail firm transmission service,

WHEREAS, the Parties have identified the projects described herein that, when taken as a whole, are expected to preserve the reliable operation of the Puget Sound Area Interconnection, and reduce the need to curtail firm transmission service; and it is in their individual and collective interests to continue to support the efforts needed to carry out these projects, and

WHEREAS, the transmission congestion affecting the Puget Sound Area interconnection is a shared problem, and the projects and cost sharing arrangements provided herein are appropriate.

NOW THEREFORE, in consideration of the mutual obligations and undertakings herein, the sufficiency of which is acknowledged, the Parties agree as follows:

1. DEFINITIONS

(a) "Bothell to SnoKing Reconductor Project" means the project identified in the Preferred Plan of Service in which Seattle City Light will reconductor the existing Bothell to SnoKing No. 1 and No. 2 230 kV lines with high-temperature conductor.

(b) "BPA Preferred Plan Projects" means, collectively, the Covington 500 kV Transformer Addition Project and the Northern Intertie Remedial Action Scheme ("RAS") Improvement Project.

(c) "Broad Street Inductor Project" means the project identified in the Preferred Plan of Service in which Seattle City Light will add series inductors (up to 10 ohm) to the Massachusetts-Broad Street 115 kV line.

(d) "ColumbiaGrid" means the Washington non-profit membership corporation formed to improve the operational efficiency, reliability, and planned expansion of the Pacific Northwest transmission grid, the

eight members of which, as of the Effective Date, are Avista Corporation; BPA; Public Utility District No. 1 of Chelan County, Washington; Public Utility District No. 2 of Grant County, Washington; Puget; Seattle City Light; Public Utility District No. 1 of Snohomish County, Washington; and Tacoma Power.

(e) "Covington 500 kV Transformer Addition Project" means the project identified in the Preferred Plan of Service in which BPA will install a third 500–230 kV transformer at the BPA Covington Substation.

(f) "Delridge to Duwamish Reconductor Project" means the project identified in the Preferred Plan of Service in which Seattle City Light will reconductor the existing Delridge to Duwamish 230 kV line with high-temperature conductor.

(g) "Lakeside 230 kV Transformer Addition Project" means the project identified in the Preferred Plan of Service in which Puget will install a 230–115 kV transformer at the Puget Lakeside Substation.

(h) "Maple Valley to SnoKing Reconductor Project" means the project identified in the Preferred Plan of Service in which Seattle City Light will reconductor the existing Maple Valley to SnoKing 230 kV line with high-temperature conductor.

(i) "North Downtown Inductor Project" means the project identified in the Preferred Plan of Service in which Seattle City Light will add series inductors (up to 10 ohm) to the East Pine-Broad Street line as part of Seattle City Light's North Downtown Substation Project.

(j) "Northern Intertie RAS Improvement Project" means the project identified in the Preferred Plan of Service in which BPA will install new software for and re-wire electrical protection devices on the Northern Intertie RAS.

(k) "Northern Intertie RAS" means the existing BPA pre-programmed set of automatic operating steps that are designed to protect the regional high voltage electric grid in the event of a loss of one of the two Custer-Monroe 500 kV lines.

(l) "Preferred Plan of Service" means the "Updated Recommended Transmission Expansion Plan for the Puget Sound Area to Support Winter South-to-North Transfers" approved by ColumbiaGrid on October 28, 2011, a copy of which is attached as Exhibit A to this MOA.

(m) "Preferred Plan Projects" means, collectively, the BPA Preferred Plan Projects, the Puget Preferred Plan Projects, and the Seattle City Light Preferred Plan Projects.

(n) "Puget Preferred Plan Projects" means the Sammamish to Lakeside to Talbot Rebuild Project and the Lakeside 230 kV Transformer Addition Project.

(o) "Sammamish to Lakeside to Talbot Rebuild Project" means the project identified in the Preferred Plan of Service in which Puget will upgrade Puget's existing Sammamish to Lakeside to Talbot 115 kV lines to 230 kV operation using Puget's existing Sammamish to Lakeside to Talbot utility corridor.

(p) "Seattle City Light Preferred Plan Projects" means the Bothell to SnoKing Reconductor Project, the Broad Street Inductor Project, the North Downtown Inductor Project, and the Delridge to Duwamish Reconductor Project.

2. TERM

The term of this MOA shall be effective on the date of execution by all Parties (Effective Date) and shall continue until the earliest to occur of the following: (i) the date of completion of the last of the Preferred Plan Projects; (ii) a Party terminates this MOA pursuant to section 5(c) of this MOA; or (iii) December 31, 2020.

3. PREFERRED PLAN OF SERVICE PROJECTED PROJECT COMPLETION SCHEDULE AND COST

(a) **BPA Preferred Plan Projects**. Each Party acknowledges that, as of the Effective Date, the projected project completions schedule and capital costs of the BPA Preferred Plan Projects are as follows:

BPA Preferred Plan Project	Projected Completion	Projected Capital Cost
1. Covington 500 kV Transformer Addition Project	2018	$56.2 million
2. Northern Intertie RAS Improvement Project	2014	$4.0 million

(b) **Puget Preferred Plan Projects.** Each Party acknowledges that, as of the Effective Date, the projected project completions schedule and capital costs of the Puget Preferred Plan Projects are as follows:

Puget Preferred Plan Project	Projected Completion	Projected Capital Cost
1. Sammamish to Lakeside to Talbot Rebuild Project	2017	$45.0 million (single circuit) or $41.3 million (double circuit)
2. Lakeside 230 kV Transformer Addition Project	2017	$22.0 million

(c) **Seattle City Light Preferred Plan Projects.** Each Party acknowledges that, as of the Effective Date, the projected project completions schedule and capital costs of the Seattle City Light Preferred Plan Projects are as follows:

Seattle City Light Preferred Plan Project	Projected Completion	Projected Capital Cost
1. Bothell to SnoKing Reconductor Project	2017	$2.5 million
2. Broad Street Inductor Project	2017	$7.3 million*
3. North Downtown Inductor Project	2017	$4.4 million*
4. Delridge to Duwamish Reconductor Project	2016	$1.9 million

(d) **Preferred Plan Project Not Planned for Construction Based On the Construction of the Puget Preferred Plan Projects.** Each Party acknowledges that, the construction of the Puget Preferred Plan Projects negates the need for the construction of the Maple Valley to

* The projected capital costs of the Broad Street Inductor Project and the North Downtown Inductor Project do not reflect any projected costs for land acquisition. As of the Effective Date, the Parties acknowledge that Seattle City Light may have to acquire land to accomplish the Broad Street Inductor Project, and the actual capital costs of the Broad Street Inductor Project will, if necessary, reflect the actual costs of land acquisition for such project. As of the Effective Date, the Parties do not anticipate that the North Downtown Inductor Project will require Seattle City Light to acquire any land.

SnoKing Reconductor Project. Each Party acknowledges that, as of the Effective Date, the projected project completions schedule and capital costs of the Maple Valley to SnoKing Reconductor Project are as follows:

Preferred Plan Project	Projected Completion	Projected Capital Cost
Maple Valley to SnoKing Reconductor Project	N/A	$16.1 million

4. PRELIMINARY CAPITAL COST ALLOCATION

As of the Effective Date of this MOA, the Parties agree to share in the capital costs of Preferred Plan Projects as follows:

(a) **BPA Preferred Plan Projects**. BPA shall pay the entire actual capital cost of each of (i) the Covington 500 kV Transformer Addition Project and (ii) the Northern Intertie RAS Improvement Project

(b) **Seattle City Light Preferred Plan Projects.** BPA, Puget, and Seattle City Light shall each pay one-third of the total actual capital cost of each of (i) the Bothell to SnoKing Reconductor Project; (ii) the Delridge to Duwamish Reconductor Project; (iii) the Broad Street Inductor Project; and (iv) the North Downtown Inductor Project.

(c) **Puget Preferred Plan Projects.** BPA and Seattle City Light shall each pay to Puget an amount equal to one-third of the adjusted projected capital cost of the Maple Valley to SnoKing Reconductor Project, which adjusted projected capital cost shall be determined as provided in the following table:

Projected Capital Cost of the Maple Valley to SnoKing Reconductor Project	=	$16.1 million * Cost Differences in Reconductor Projects

where:

Cost Differences in Reconductor Projects	=	the quotient of

(i) the sum of the actual capital costs of the Delridge to Duwamish Reconductor Project and Bothell to SnoKing Reconductor Project and

(ii) the sum of the projected capital costs of the Delridge to Duwamish Reconductor Project and Bothell to SnoKing Reconductor Project identified in section 3(c) above (i.e., $4.4 million)

5. FINAL CAPITAL COST ALLOCATION AND OPTION OF ELECTION TO CANCEL

(a) The allocations identified in section 4 are based on preliminary planning capital cost projections. The final capital cost allocation for the Seattle City Light Preferred Plan Projects shall be based on actual design and construction capital costs for each of the Seattle City Light Preferred Plan Projects, and the final capital cost allocation for the Puget Preferred Plan Projects shall be in accordance with the formula proscribed in section 4(a) above. The Parties shall review such actual design and construction capital costs and schedules and shall agree in writing to the final capital cost allocation.

(b) Each Party reserves the right to cancel any Preferred Plan Project for which such Party is the sponsor if such Party determines that

(i) the actual capital cost of such Preferred Plan Project is likely to exceed the projected capital cost of such Preferred Plan Project by a factor that is equal to or in excess of thirty percent (30%), or

(ii) the projected in-service date of the Preferred Plan Project will be more than twenty-four (24) months later than the projected completion date identified in section 3 above for such Preferred Plan Project.

If a Party elects to cancel a Preferred Plan Project for which such Party is a sponsor under this section 5(b), such Party shall provide written notice to such other Parties within five (5) days of such election. Within a reasonable period of time after receipt of such written notice, representatives of the Parties shall convene and identify alternative projects that the Parties expect will preserve the reliable operation of the Puget Sound Area Interconnection and reduce the need to curtail firm transmission service in a manner similar to the project cancelled pursuant to section 5(b). If the Parties cannot agree in good faith upon an alternative project to replace a project cancelled pursuant to section 5(b) within a reasonable period following receipt of written notice of

such termination, then any Party may terminate this MOA upon 90 days' written notice to the other Parties.

6. RESPONSIBILITY FOR ALL OTHER COSTS

(a) Each Party shall be solely responsible for the Preferred Plan Project for which such Party is the sponsor, less the contributions from the other Parties as provided in section 4. This MOA only affects the cost sharing for the Preferred Plan Projects.

(b) Each Party shall own the assets for the Preferred Plan Project for which such Party is the sponsor and shall be solely responsible for the operation and maintenance costs of such assets. Each Party shall be entitled to any capacity increases to its transmission system that results from any assets installed pursuant to this MOA.

(c) If any Party enhances a Preferred Plan Project after completion of such Preferred Plan Project to meet such Party's needs, the cost of such future enhancements shall be borne solely by such Party. Each Party shall attempt in good faith to coordinate with the other Parties with respect to any future enhancements to a Preferred Plan Project to minimize or eliminate any impact to the interconnected electric systems of such other Parties.

7. PAYMENT SCHEDULE

Payments will be made at the completion of individual projects. The Parties shall agree in writing to the method and schedule for the cost share contributions to be made under this MOA.

8. NATIONAL ENVIRONMENTAL POLICY ACT ASSESSMENT

To the extent that BPA's financial contributions under this MOA are determined to trigger the need for analysis of projects under the National Environmental Policy Act, the Parties shall coordinate such assessment.

9. JOINT COMMUNICATIONS

The Parties shall coordinate joint communications regarding presentations of the preferred plan of service to the public.

10. GENERAL PROVISIONS

(a) This MOA, including documents expressly incorporated by reference, constitutes the entire agreement between the Parties. It supersedes all previous communications, representations, or contracts, either written or oral, which purport to describe or embody the subject matter of this MOA.

(b) No amendment of this MOA shall be of any force or effect unless set forth in a written instrument signed by authorized representatives of each Party.

(c) This MOA is made and entered into for the sole benefit of the Parties, and the Parties intend that no other person or entity shall be a direct or indirect beneficiary of this MOA.

(d) This MOA shall be interpreted consistent with and governed by federal law.

(e) In the event that any provision of this MOA is determined to be invalid or unenforceable for any reason, in whole or part, the remaining provisions of this MOA shall be unaffected thereby and shall remain in full force and effect to the fullest extent permitted by law, and such invalid or unenforceable provision shall be replaced by the Parties with a provision that is valid and enforceable and that comes closest to expressing the Parties' intention with respect to such invalid or unenforceable provision.

(f) Each Party shall be solely responsible for and shall pay its own costs and expenses incurred by it in connection with the negotiation of this MOA.

(g) Whenever this MOA requires or provides that (i) a notice be given by a Party to any other Party or (ii) a Party's action requires the approval or consent of any other Party, such notice, consent or approval shall be given in writing and shall be given in accordance with the provisions of Exhibit B to this MOA.

(h) This MOA is binding on any successors and assigns of the Parties. No Party may otherwise transfer or assign this MOA, in whole or in part, without the other Parties' written consent. Such consent shall not be unreasonably withheld.

(i) Nothing contained in this MOA shall be construed as creating a corporation, company, partnership, association, joint venture or other entity, nor shall anything contained in this MOA be construed as

creating or requiring any fiduciary relationship between the Parties. No Party shall be responsible hereunder for the acts or omissions of any other Party. Nothing herein shall preclude (i) a Party from taking any action (or having its affiliates take any action) with respect to any other transmission project, including any such project that may compete with the projects provided herein, or (ii) the Parties jointly from entering into MOAs with third parties for the joint development, construction, ownership or operation of any project or for the provision of transmission capacity from such project.

(j) Other than the obligation to pay amounts due under Section 4, in no event shall any Party be liable to any other Party under any provision of this MOA for any losses, damages, costs or expenses for any direct, special, indirect, incidental, consequential, or punitive damages, including but not limited to loss of profit or revenue, whether based in whole or in part in contract or in tort, including negligence, strict liability, or any other theory of liability; provided, however, that damages for which a Party may be liable to any other Party under another agreement will not be considered to be special, indirect, incidental, or consequential damages hereunder.

(k) The Parties shall not be in breach of their respective obligations to the extent the failure to fulfill any obligation is due to an Uncontrollable Force. "Uncontrollable Force" means an event beyond the reasonable control of, and without the fault or negligence of, the Party claiming the Uncontrollable Force, that prevents that Party from performing its contractual obligations under this MOA and which, by exercise of that party's reasonable care, diligence and foresight, such Party was unable to avoid. Uncontrollable Forces include, but are not limited to:

(1) strikes or work stoppage;

(2) floods, earthquakes, or other natural disasters; terrorist acts; and

(3) final orders or injunctions issued by a court or regulatory body having competent subject matter jurisdiction which the Party claiming the Uncontrollable Force, after diligent efforts, was unable to have stayed, suspended, or set aside pending review by a court of competent subject matter jurisdiction.

Neither the unavailability of funds or financing, nor conditions of national or local economies or markets shall be considered an Uncontrollable Force. The economic hardship of a Party shall not

constitute an Uncontrollable Force. Nothing contained in this provision shall be construed to require any Party to settle any strike or labor dispute in which it may be involved.

If an Uncontrollable Force prevents a Party from performing any of its obligations under this MOA, such party shall: (1) immediately notify the other Parties of such Uncontrollable Force by any means practicable and confirm such notice in writing as soon as reasonably practicable; (2) use its best efforts to mitigate the effects of such Uncontrollable Force, remedy its inability to perform, and resume full performance of its obligation hereunder as soon as reasonably practicable; (3) keep the other Parties apprised of such efforts on an ongoing basis; and (4) provide written notice of the resumption of performance. Written notices sent under this section 10(k) must comply with Exhibit B, Notices and Contact Information.

11. WAIVER

No waiver of any provision or breach of this MOA shall be effective unless such waiver is in writing and signed by the waiving Party, and any such waiver shall not be deemed a waiver of any other provision of this MOA or any other breach of this MOA.

12. SIGNATURE

The Parties have caused this MOA to be executed as of the latest date all Parties have signed this MOA.

CITY OF SEATTLE CITY LIGHT DEPARTMENT		UNITED STATES OF AMERICA Department of Energy Bonneville Power Administration	
By:	Jorge Carrasco	By:	Harder Juj
Name: *(Print/ Type)*	Jorge Carrasco	Name: *(Print/ Type)*	Harder Juj
Title:	Superintendent	Title:	VP, Planning + Asset Mgmt.
Date:	1/31/12	Date:	1/31/12

PUGET SOUND ENERGY, INC.

By: Susan McLain

Name: Susan McLain
(Print/ Type)

Title: Senior Vice President Delivery Operations

Date: 1/31/12

EXHIBIT A
PREFERRED PLAN OF SERVICE

EXHIBIT B
NOTICES

Any notice required under this MOA shall be in writing and shall be delivered in person; or with proof of receipt by a nationally recognized delivery service or by United States Certified Mail. Notices are effective when received. Either Party may change the name or address for receipt of notice by providing notice of such change. The Parties shall deliver notices to the following person and address:

If to Seattle City Light:

Attention:
Phone:
Fax:
Email:

If by First Class Mail:

City of Seattle, City Light Department
(Customer Address)
(Customer City, State, Zip)

If by Overnight Delivery Service:
City of Seattle, City Light Department
(Customer Address)
(Customer City, State, Zip)

If to BPA:

Attention:
Phone:
Fax:
Email:

If by First Class Mail:

Bonneville Power Administration
P.O. Box 61409
Vancouver, WA 98666-1409

If by Overnight Delivery Service:
Bonneville Power Administration – TSE/TPP-2
7500 NE 41st Street – Suite 130
Vancouver, WA 98662

If to the Puget:

Attention:
Phone:
Fax:
Email:

If by First Class Mail:

Puget Sound Energy, Inc.
P.O. Box 97034
Bellevue, WA 98009-9734

If by Overnight Delivery Service:
Puget Sound Energy, Inc.
10885 N.E. 4th Street, Suite 1100
Bellevue, WA 98004-5591

EXHIBIT A
PREFERRED PLAN OF SERVICE

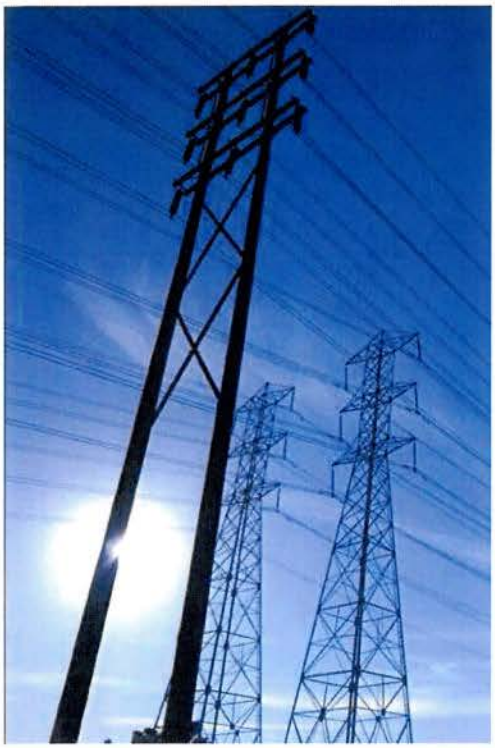

Updated Recommended Transmission Expansion Plan for the Puget Sound Area to Support Winter South-to-North Transfers

ColumbiaGrid

Puget Sound Area Study Team

Bonneville Power Administration, Puget Sound Energy, Seattle City Light, Snohomish County PUD, Tacoma Power, Powerex

Provisional Approval by the Study Team on April 25, 2011

Final Approval by the Study Team on October 28, 2011

Introduction and Conclusions

In October of 2010, the Puget Sound Area Study Team issued a report entitled "Transmission Expansion Plan for the Puget Sound Area." The report is available via the ColumbiaGrid website. The report details a transmission plan for the Puget Sound region that would, as a basic requirement, provides for reliable system performance while significantly improving the ability of the transmission grid to support power transfers between the Northwest and British Columbia. Since the release of the original report, the following changes have occurred that have led to the need for the Puget Sound Area Study Team to revise their transmission plan:

1) ***Additional scenarios*** – The Puget Sound area utilities have been meeting regularly since the publication of the original report in October 2010 and have developed several additional scenarios to be studied (e.g., the addition of a new Broad Street-Massachusetts 115 kV underground cable). In response, the study team repeated their prior analysis for the critical winter south-to-north condition for the new scenarios. The results of this analysis are shown in the table provided in Appendix A.

2) ***Increased likelihood that Puget Sound Energy will move forward with Sammamish-Lakeside-Talbot project*** – Since the development of the original plan, Puget Sound Energy has further developed their plan to rebuild two 115 kV lines to 230 kV (Sammamish-Lakeside-Talbot #1 and #2) and provide new 230/115 kV transformation at their Lakeside Substation. Although both lines will be rebuilt, only one of the lines may be initially energized at 230 kV. As stated in the prior report, this facility addition can delay the need to reconductor the Maple Valley-SnoKing 230 kV lines beyond the ten-year transmission planning horizon.

   The study team decided that since Puget Sound Energy is moving forward with this plan, the Sammamish-Lakeside-Talbot project should be listed as the proposed project in the plan instead of the Maple Valley-SnoKing reconductor. This project will give Puget Sound Energy the ability to provide necessary load support at Lakeside which cannot be achieved with the Maple Valley-SnoKing reconductor project, while providing similar Transmission Curtailment Risk Measure (TCRM) benefits as the Maple Valley-SnoKing reconductor project. A downside of the Sammamish-Lakeside-Talbot project is that its south-to-north Total Transfer Capability (TTC) is lower as compared to the Maple Valley-SnoKing reconductor. However, the Sammamish-Lakeside-Talbot project has additional benefits over the Maple Valley-SnoKing reconductor project in that it provides an additional 230 kV transmission path through the Puget Sound area and makes it feasible to reconductor rather than rebuild the Bothell-SnoKing 230 kV lines.

3) ***Increased likelihood that Seattle City Light will move forward with their North Downtown Substation Project*** – Since the development of the plan, Seattle City Light has indicated that plans to add a new North Downtown Substation have become more likely. The final plan is still being developed by SCL. The option studied includes a new underground cable (North Downtown-Massachusetts 230 kV), a new 115 kV line between North Downtown and Canal, and two 230/115 kV transformers at the proposed substation (see the following Figure One). This project was studied in the prior plan and, as identified previously, a third set of series inductors will be required on the new Canal-North Downtown 115 kV line with the addition of the North Downtown Substation. The plan for the system without, or prior to, the addition of the North Downtown Substation remains the same (adding series inductors on the two 115 kV underground cables). There is not a significant impact on the plan with or without the North Downtown Substation project as long as the project includes a third set of series inductors on the new North Downtown-Canal 115 kV line.

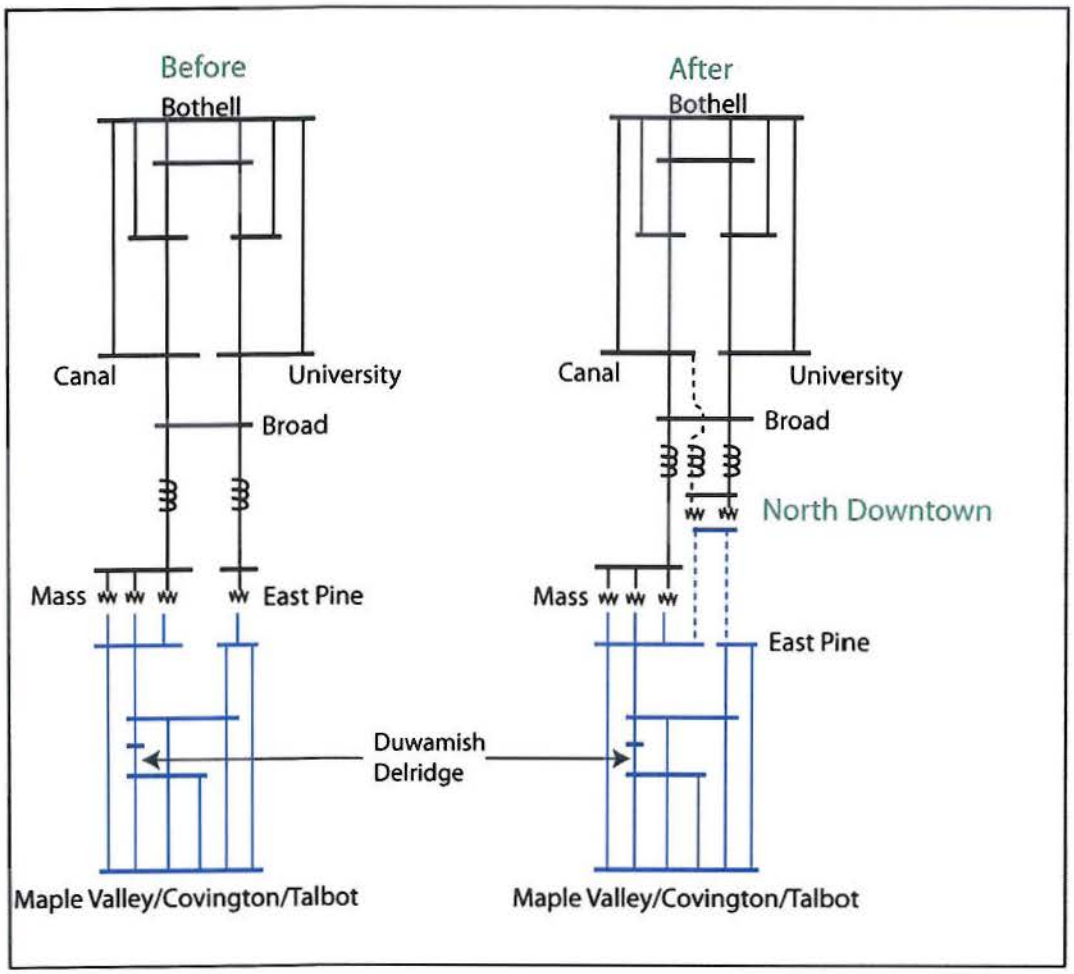

Figure One: One-Line Diagram with the proposed locations of the series inductor additions, before and after the Seattle City Light North Downtown Substation Project.

4) ***Seattle area line rating increases*** – Several key transmission lines in the region have been rerated to a higher capability. In some cases the new ratings provide a 77% increase over the ratings that were utilized in the original study. This has enabled the study team to reduce the size of the series inductors (from 26 ohms to 6 ohms) that were proposed for the Seattle City Light 115 kV transmission lines and cables. The smaller inductors lead to more power flowing through the Seattle City Light system resulting in the need to include an additional facility reconductor in the plan; the Duwamish-Delridge 230 kV line. The cost of this additional reconductor is estimated to be relatively low ($1.6 million). This additional cost is projected to be partially offset by the savings achieved by the installation of smaller inductors. The smaller inductors also reduce the need to add shunt capacitors to offset the reactive losses from the larger sized inductors.

5) ***Seattle City Light Update to TPS Settings*** - Seattle City Light has recently updated the TPS settings which have resulted in operational changes that preclude it from being used as a project in this study to reduce TCRM and increase TTC levels on the northern intertie. All results that use the previous scheme have not been included in this report.

As a result of the above changes, the plan to support south-to-north transfers has been revised as specified in this report. Additional transmission facilities, such as a second Portal Way 230/115 kV transformer, will likely be necessary to support north-to-south transfers. These additional facilities will be further analyzed in subsequent studies.

Overview of Revised Plan

As a result of the above changes, the Transmission Expansion Plan for the Puget Sound Area was revised and the new plan is shown in the following Figure Two:

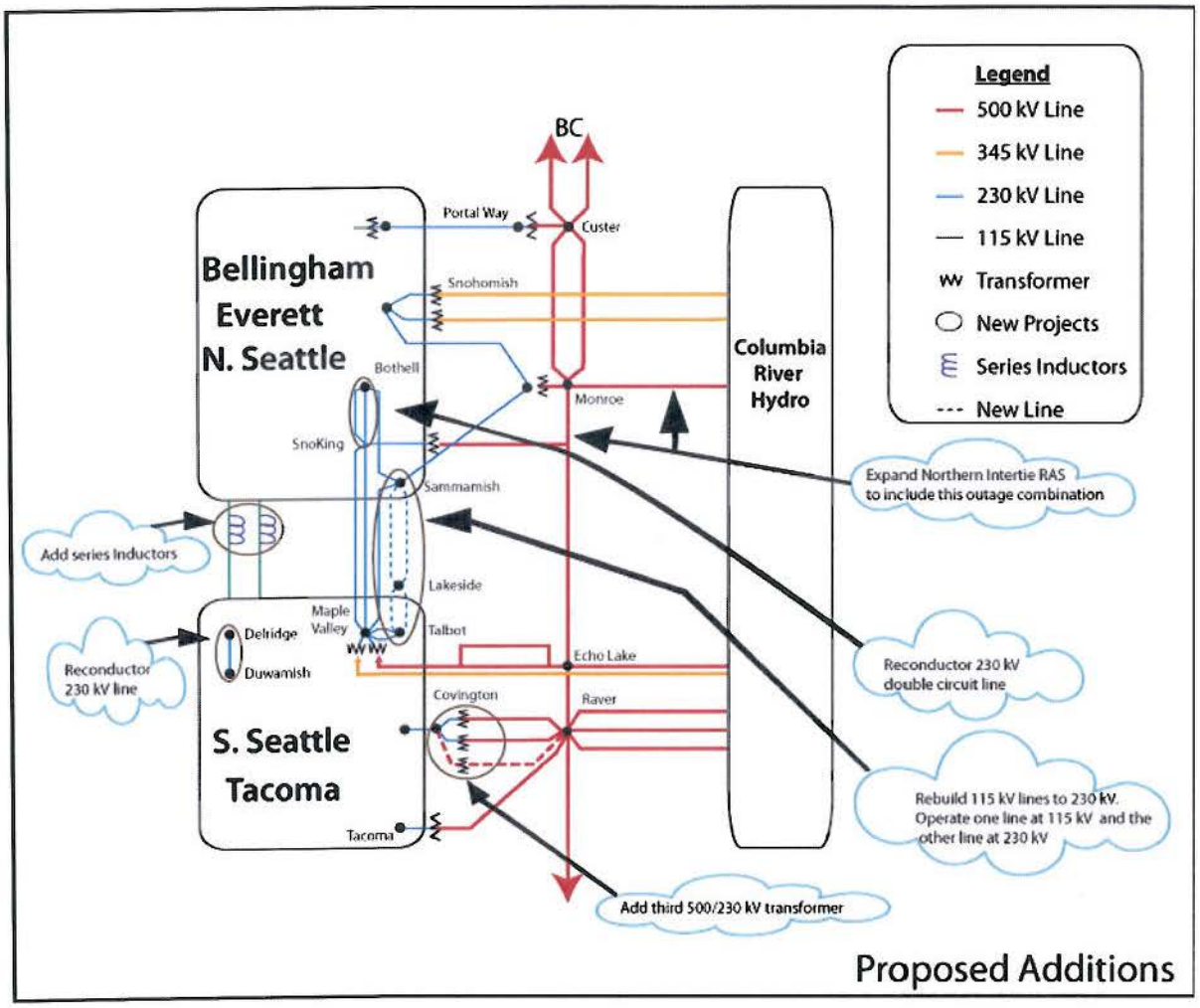

Figure Two: Revised Puget Sound Area Transmission Expansion Plan for Supporting South-to-North Transfers

Projects included in the Puget Sound Area Transmission Expansion Plan to support south-to-north transfers are:

- Reconductor the double circuit Bothell-SnoKing 230 kV lines with high temperature conductor
- Expand the Northern Intertie RAS
- Add a third Covington 500/230 kV transformer
- Reconductor the Delridge-Duwamish 230 kV line
- Add series inductors to the Massachusetts-Union-Broad and East Pine-Broad 115 kV lines in the downtown Seattle system. The final inductor size is under study and may vary from the 6 ohms specified in this report. Each line may have a different inductor size to optimize the system.
- Rebuild both the Sammamish-Lakeside-Talbot 115 kV lines to 230 kV. Energize one line at 230 kV and the other at 115 kV.

The cost estimates for the project in the preferred plan are shown in the following table. It should be noted that portions of the projects may be planned for local utility service and may not be necessary to accomplish the transfer capability goals of this study.

PSAST Preferred South-to-North Plan Cost Estimate	
	Cost Estimate (M)
Reconductor Bothell-SnoKing 230kV #1 & #2 with high temperature conductor	$3
Extend the Northern Intertie RAS to trip for the combined outage of the Chief Joseph-Monroe and Monroe-SnoKing-Echo Lake 500 kV lines	$3
Add a third Covington 500/230 kV transformer, a 500 kV terminal at Raver for the third Raver-Covington 500 kV line, and a 500 kV Bus at Covington	$60
Reconductor Delridge - Duwamish 230 kV Line with high temperature conductor	$2
6 ohm inductors on the two 115 kV cables out of SCL's Broad Street Substation	$13
Lakeside 230/115 kV transformer, rebuild both 115 kV Sammamish – Talbot lines to 230 kV energizing one line at 230 kV	$65
Total Preferred Projects	$146

* The majority of these estimates are preliminary estimates. More detailed estimates will be developed by the Puget Sound Area utilities.

Next Steps

Now that the overall south-to-north plan is complete, the individual transmission owners need to identify the parties responsible for each of the projects and agree on the cost allocation for the projects. After this has been completed, detailed feasibility studies, cost estimates, project timing, and schedules will be completed. In addition, the following project specific studies will be completed by the Puget Sound Area Study Team:

- North-to-South transfer conditions will be studied to determine the effect that the new preferred plan has on transfer capability and to determine if any additional projects are needed.
- Series Inductor Project: Studies need to be completed to determine the proper size for the series inductors, the impact on north-to-south transfers, and the preferred switching arrangement.
- Determine how long the proposed plan will last. The PSAST will grow the Northwest loads in the current 2020 base case to 2025 and 2030 load levels. The additional load will be served by eastern resources. TCRM and TTC values will be calculated to determine whether they may degrade over time.
- Northern Intertie RAS Expansion Project: The Puget Sound Area Study Team will be available to assist BPA and BC Hydro with any additional studies necessary to implement this RAS expansion.
- Covington Transformer Project: Additional studies will be completed by BPA, to further analyze alternative locations for this transformer addition, the need for a 500 kV switchyard at Covington, potential operational solutions, potential remedial action schemes, the size of the transformer, the impedance of the transformer, and the preferred connection to the 230 kV bus. The BPA studies will be coordinated with area utilities through the Puget Sound Area Study Team.

While the projects identified in this report improve the transfer capability through the Puget Sound Area, there remain curtailment risks for firm transfers during outage conditions (N-1-X). Consequently, the Puget Sound Area Study Team will continue to investigate cost effective ways to reduce the risk of firm curtailments.

Study Results

New winter south-to-north studies were completed for a variety of scenarios and the detailed study results are provided in Appendix A. The system performance for each scenario was compared using the following two measures in addition to cost and permitting feasibility:

1) ***Transmission Curtailment Risk Measure (TCRM):*** TCRM is a measure of the likelihood of experiencing curtailments of transfers between the Northwest and British Columbia. The higher the TCRM value the greater the exposure to curtailments. The TCRM analysis

includes the cases with all facilities in service as well as with any single facility out of service. A detailed description of the TCRM methodology is provided in the original report. In the original report, winter and summer conditions for both north-to-south and south-to-north transfers were studied. For this update, only winter conditions with south-to-north transfers were studied as that is the critical system state for the alternatives presented in this report.

2) ***Total Transfer Capability (TTC):*** The TTC (thermal only) of the Westside Northern Intertie (WSNI) was calculated for each of the options in the traditional way, with all lines in service. Only the winter south-to-north condition was studied, with 680 MW of generation operating in the Puget Sound Area. The specific generation unit assumptions are as described in Appendix J of the original report. Puget Sound Area generation during winter peak is between 950 MW and 1550 MW 80% of the time (when load has been greater than 6000MW along with temperature below 32 degrees F). With higher levels of Puget Sound Area generation, the TTC numbers shown in the tables would likely increase.

The major issues addressed in this study are the impacts of the various alternatives on the 115 kV system in the Seattle area, and the impacts of the various alternatives on the 230 kV system between the Maple Valley and SnoKing areas. In all cases, the other major projects as described in the original report are modeled, which include the Northern Intertie RAS expansion, third Covington transformer, and second Portal Way transformer. In addition, the Bothell-SnoKing rebuild project was included in most scenarios although sensitivity studies were conducted for the reconductor option which ended up being the preferred option. Provided below is a discussion of each of the major issues addressed by the study team and their conclusions.

1) 26 ohm versus 6 ohm series inductors

Table 1: Selected TCRM and TTC Results, 26 ohm inductors vs. 6 ohm inductors

Study #	Series Inductors on SCL's 115 kV Cables- 26 ohms	Series Inductors on SCL's 115 kV Cables- 6 ohms	Maple Valley-SnoKing High Temp	PSE's Sammamish - Lakeside - Talbot 115kV to 230kV Upgrade Project (Two Lines Operated at 230 kV)	Total TCRM - Without TCRM Lines Outside of the Puget Sound Area	Winter South North WSNI Thermal TTC at 680 MW Puget Sound Generation
3	X		X		10,304	2,270
4		X	X		8,433	2,297
17	X			X	10,460	1,773
18		X		X	8,666	2,038

With the changes in 115 kV line ratings, the Seattle 115 kV system is capable of accommodating greater flows. As a result, using a series inductor impedance greater than 6 ohms is no longer necessary to reduce the loadings on the Seattle 115 kV system. In fact, the TCRM is slightly better (lower) with the smaller 6 ohm inductors. Prior studies have also indicated that the smaller inductor size provided better results for summer north-to-south conditions. Higher impedance inductors also would have the undesirable effect of pushing more power over to the Maple Valley-SnoKing lines and reducing the TTC. In addition the smaller inductors require the addition of fewer shunt capacitors to offset the reactive losses from the inductors. The 6 ohm inductors have the effect of adding a circuit reactance that is equivalent to 8 miles of overhead 115 kV line. The 6 ohm inductors are now the preferred 115 kV project due to better performance and lower cost.

2) 6 ohm series inductors versus phase shifting transformers

Table 2: 6 ohm series inductors versus phase shifting transformers

Study #	SCL Phase Shifting Transformer	Series Inductors on SCL's 115 kV Cables- 6 ohms	Maple Valley-SnoKing High Temp	PSE's Sammamish - Lakeside - Talbot 115kV to 230kV Upgrade Project (Two Lines Operated at 230 kV)	Total TCRM - Without TCRM Lines Outside of the Puget Sound Area	Winter South North WSNI Thermal TTC at 680 MW Puget Sound Generation
1	X		X		13,122	2,455
4		X	X		8,433	2,297
15	X			X	11,500	2,136
18		X		X	8,666	2,038

The TCRM studies for the phase shifting transformer project may not reflect the true performance of this project due to the difficulty of accurately modeling the phase shifting transformer operating strategy. As a result, while the TCRM studies show poorer performance for the phase shifting transformers than for the series inductor project, the study team believes that this result is a shortcoming of the phase shifter modeling and, in fact, the phase shifters should perform as well or better than the series inductors. This was the conclusion of the TTC studies, where a benefit was observed when using the phase shifting transformers instead of fixed series inductors. However, as the incremental benefits are not believed to be sufficient to justify the higher capital and maintenance costs of the phase shifter option, the 6 ohm series inductors remain the recommended project.

3) 6 ohm series inductors versus adding a third 115 kV cable

Table 3: 6 ohm inductor versus adding a third 115 kV cable

Study #	Series Inductors on SCL's 115 kV Cables- 6 ohms	3rd 115 kV Underground Cable from Mass to Broad Street & Mass Bank 1 Energized	Maple Valley-SnoKing High Temp	PSE's Sammamish - Lakeside - Talbot 115kV to 230kV Upgrade Project (Two Lines Operated at 230 kV)	Total TCRM - Without TCRM Lines Outside of the Puget Sound Area	Winter South North WSNI Thermal TTC at 680 MW Puget Sound Generation
4	X		X		8,433	2,297
5		X	X		19,027	1,513
18	X			X	8,666	2,038
19		X		X	11,213	2,297

This option examines adding a third Seattle City Light 115 kV underground cable (a second cable from Broad Street to Massachusetts) in place of the 6 ohm inductors. The results for this alternative vary depending on whether the Sammamish-Lakeside-Talbot lines are upgraded to 230 kV or the Maple Valley-SnoKing lines are reconductored. With the preferred plan (upgrading the Sammamish-Lakeside-Talbot lines to 230 kV), there is a benefit to the alternative of adding a third cable from a TTC perspective and a slight benefit to the series inductor option from the TCRM perspective. Conversely, if the Maple Valley-SnoKing reconductor project moves forward, the series inductor option performs better from both a TCRM and TTC perspective. This is because if a third cable is added, there is still a need for the series inductors to eliminate overloading on the Broad Street-East Pine 115 kV cable, the East Pine-Maple Valley 230 kV line, and the Massachusetts 230/115 kV transformers. The third cable option is deemed to be less preferable to the recommended option primarily because the cost of the third cable is expected to far exceed the cost of the series inductors. In addition, the construction of an additional Broad-Massachusetts 115 kV cable is incompatible with Seattle City Light's future plan to add a new 230 kV cable as part of their North Downtown Substation

Project (North Downtown-Massachusetts 230 kV). The 6 ohm series inductors remain the preferred project due to better performance and lower cost.

4) ***6 Ohm Series inductors versus replacing cables***

Table 4: 6 ohm inductors versus replacing cables

Study #	Series Inductors on SCL's 115 kV Cables- 6 ohms	Replace SCL's Existing 115 kV Cables (no inductors)	Maple Valley-SnoKing High Temp	PSE's Sammamish - Lakeside - Talbot 115kV to 230kV Upgrade Project (Two Lines Operated at 230 kV)	Total TCRM - Without TCRM Lines Outside of the Puget Sound Area	Winter South North WSNI Thermal TTC at 680 MW Puget Sound Generation
4	X		X		8,433	2,297
6		X	X		19,398	1,602
18	X			X	8,666	2,038
20		X		X	11,746	2,210

If the 6 ohm inductors are in place, potential overloading on the cables is no longer an issue so rebuilding the cables would have no benefit. This option examines rebuilding the cables in lieu of the 6 ohm inductors. The results for this alternative vary depending on whether the Sammamish-Lakeside-Talbot lines are upgraded to 230 kV or the Maple Valley-SnoKing lines are reconductored. With the preferred plan (upgrading the Sammamish-Lakeside-Talbot lines to 230 kV), the series inductors perform better from a TCRM perspective and slightly worse from a TTC perspective. If the Maple Valley-SnoKing reconductor project moves forward then the series inductor option performs better from both a TCRM and TTC perspective. The TCRM performance is better for the series inductor options because if the cables are replaced, there would be other limits reached on the downtown Seattle system. The additional limits reached that account for most of the TCRM increase include the East Pine 230/115 kV transformer and the Massachusetts 230/115 kV transformers. The series inductors remain the preferred project due to better performance and lower cost.

5) 6 ohm *series inductors versus the Seattle City Light North Downtown Substation project with and without series inductors*

Table 5: 6 ohm inductors versus the Seattle City Light North Downtown Substation project with and without series inductors

Study #	Series Inductors on SCL's 115 kV Cables- 6 ohms	SCL's North Downtown Substation	SCL's North Downtown Substation (6 ohm inductors)	Maple Valley-SnoKing High Temp	PSE's Sammamish - Lakeside - Talbot 115kV to 230kV Upgrade Project (Two Lines Operated at 230 kV)	Total TCRM - Without TCRM Lines Outside of the Puget Sound Area	Winter South North WSNI Thermal TTC at 680 MW Puget Sound Generation
4	X			X		8,433	2,297
32		X		X		117,049	-1,380
36			X	X		8,778	2,672
18	X				X	8,666	2,038
34		X			X	38,594	-832
38			X		X	9,101	2,207

The study results indicate that the TCRM would increase dramatically and the TTC would be negative (not capable of south-to-north transfers) unless the series inductors are included in the plans for the new North Downtown Substation. The majority of this increase is due to overloading on the Broad-North Downtown 115 kV cable. As a result, the series inductors are needed before and after the addition of the North Downtown Substation Project.

6) **6 ohm series inductors:** ***Reinforcing Maple Valley–SnoKing 230 kV lines versus options to upgrade Sammamish-Lakeside-Talbot 115 kV lines versus Monroe-Echo Lake #2***

Table 6: 6 ohm inductors – Reinforcing Maple Valley–SnoKing 230 kV lines versus options to upgrade Sammamish-Lakeside-Talbot 115 kV lines versus Monroe-Echo Lake #2

Study #	Series Inductors on SCL's 115 kV Cables- 6 ohms	Maple Valley-SnoKing High Temp	Maple Valley-SnoKing Rebuild	PSE's Sammamish - Lakeside - Talbot 115kV to 230kV Upgrade Project (Two Lines Operated at 230 kV)	PSE's Sammamish - Lakeside - Talbot 115kV to 230kV Upgrade Project (One Line Operated at 230 kV)	Monroe-Echo Lake #2 500kV	Total TCRM - Without TCRM Lines Outside of the Puget Sound Area	Winter South North WSNI Thermal TTC at 680 MW Puget Sound Generation
4	X	X					8,433	2,297
11	X		X				7,623	2,632
18	X			X			8,666	2,038
28	X	X		X			9,003	2,700
81	X				X		13,422	1,643
80	X					X	5,047	2,875

The lowest TCRM and the highest TTC for line improvements east of Lake Washington can be achieved by building the Monroe-Echo Lake #2 500 kV line in addition to the 6 ohm series inductors. Unfortunately, this is also the highest cost transmission option.

From a TCRM perspective there is little difference between the Maple Valley – SnoKing reinforcement options and the Sammamish – Lakeside – Talbot upgrade project with two lines operated at 230 kV although the Maple Valley-SnoKing rebuild option performs slightly better than the others. From a TTC perspective, there is an advantage for the Maple Valley-SnoKing options; particularly the rebuild option. However, this was not deemed to be a sufficient advantage over the preferred Sammamish-Lakeside-Talbot 230 kV upgrade project with two lines operated at 230 kV. A major benefit of the Sammamish-Lakeside-Talbot options is that

they would provide necessary load service to Lakeside Substation which the Maple Valley-SnoKing options would not. Pursuing the Sammamish-Lakeside-Talbot options at this time does not preclude reconductoring the Maple Valley-SnoKing lines at a later time.

The Sammamish – Lakeside – Talbot upgrade project can defer some of its substation construction costs by initially upgrading the 115 kV lines to 230 kV and operating one line at 115 kV and one line at 230 kV. This option did not perform as well as operating both lines at 230 kV for both TCRM and TTC. The reduction in performance has been deemed acceptable for the cost savings. The second line planned to be cut-over to 230 kV operation at a later date.

7) **6 ohm series inductors and Sammamish-Lakeside-Talbot upgrade:** ***Bothell-SnoKing rebuild versus reconductor***

Table 7: 6 ohm series inductors and Sammamish-Lakeside-Talbot upgrade: Bothell-SnoKing rebuild versus reconductor

Study #	Series Inductors on SCL's 115 kV Cables- 6 ohms	PSE's Sammamish - Lakeside - Talbot 115kV to 230kV Upgrade Project (Two Lines Operated at 230 kV)	PSE's Sammamish - Lakeside - Talbot 115kV to 230kV Upgrade Project (One Line Operated at 230 kV)	Bothell - SnoKing Rebuild	Bothell - SnoKing High Temp Instead of Rebuild	Total TCRM - Without TCRM Lines Outside of the Puget Sound Area	Winter South North WSNI Thermal TTC at 680 MW Puget Sound Generation
18	X	X		X		8,666	2,038
47	X	X			X	9,512	2,086
81	X		X	X		13,422	1,643
82	X		X		X	13,663	1,677

For either Sammamish – Lakeside – Talbot upgrade option the TCRM and TTC results are similar for the Bothell-SnoKing rebuild and reconductoring options. The reconductor of the Bothell-SnoKing lines would provide acceptable performance at a lower cost with minimal permitting and mitigation requirements.

Appendix A

Table of TCRM and TTC Results

ColumbiaGrid PSAST Options for N-1-X TCRM Determination

	115 kV Reinforcement Options									230 kV & 500 kV Reinforcement Options							TCRM & TTC Values		
Study #	SCL Phase Shifting Transformer	Series Inductors on SCL's 115 kV Cables- 26 ohms	Series Inductors on SCL's 115 kV Cables- 6 ohms	3rd 115 kV Underground Cable from Mass to Broad Street & Mass Bank 1 Energized	Replace SCL's Existing 115 kV Cables (no inductors)	Replace SCL's Existing 115 kV Cables (6 ohm inductors)	SCL's North Downtown Substation	SCL's North Downtown Substation (6 ohm inductors)	Maple Valley-SnoKing High Temp	Maple Valley-SnoKing Rebuild	PSE's Sammamish - Lakeside - Talbot 115kV to 230kV Upgrade Project (Two Lines Operated at 230 kV)	PSE's Sammamish - Lakeside - Talbot 115kV to 230kV Upgrade Project (One Line Operated at 230 kV)	Monroe-Echo Lake #2 500kV	Bothell - SnoKing High Temp Instead of Rebuild	With Covington, Portalway, Extended RAS, Bothell - SnoKing Upgrade	Total TCRM - Without TCRM Lines Outside of the Puget Sound Area	TTC (Thermal Only)	Notes
54																308,343	-	PSAST 2020 Winter South-to-North Expansion Plan Base Case
24															X	73,898	920	
1	X								X						X	13,122	2455	
3		X							X						X	10,304	2270	
4			X						X						X	8,433	2297	
5				X					X						X	19,027	1513	
6					X				X						X	19,398	1602	
7						X			X						X	8,258	2448	
32							X		X						X	117,049	-1380	
36								X	X						X	8,778	2672	
8	X									X					X	14,039	2692	
10		X								X					X	12,659	2652	
11			X							X					X	7,623	2632	
12				X						X					X	13,172	1820	
13					X					X					X	13,012	2120	
14						X				X					X	7,423	2664	
33							X			X					X	82,697	-1350	
37								X		X					X	7,111	2708	
15	X										X				X	11,500	2136	
17		X									X				X	10,460	1773	
18			X								X				X	8,666	2038	
81			X									X			X	13,422	1643	
47			X								X			X	X	9,512	2086	
82			X									X		X	X	13,663	1677	Preferred Plan
19				X							X				X	11,213	2297	
20					X						X				X	11,746	2210	
21						X					X				X	8,666	2044	
34							X				X				X	38,594	-832	
38								X			X				X	9,101	2207	
49								X			X			X	X	10,286	2233	
25	X								X		X				X	9,664	2745	
27		X							X		X				X	9,288	2497	
28			X						X		X				X	9,003	2700	
29				X					X		X				X	11,460	2305	
30					X				X		X				X	12,395	2377	
31						X			X		X				X	9,003	2700	
35							X		X		X				X	38,463	-804	
39								X	X		X				X	9,296	2732	
56								X	X		X			X	X	10,285	2753	
22													X		X	13,501	2104	
40							X						X		X	46,466	-292	
41								X					X		X	4,143	2916	
80			X										X		X	5,047	2875	

EXHIBIT B
NOTICES

Any notice required under this MOA shall be in writing and shall be delivered in person; or with proof of receipt by a nationally recognized delivery service or by United States Certified Mail. Notices are effective when received. Either Party may change the name or address for receipt of notice by providing notice of such change. The Parties shall deliver notices to the following person and address:

If to Seattle City Light:

Attention:
Phone:
Fax:
Email:

If by First Class Mail:

City of Seattle, City Light Department
(Customer Address)
(Customer City, State, Zip)

If by Overnight Delivery Service:
City of Seattle, City Light Department
(Customer Address)
(Customer City, State, Zip)

If to BPA:

Attention:
Phone:
Fax:
Email:

If by First Class Mail:

Bonneville Power Administration
P.O. Box 61409
Vancouver, WA 98666-1409

If by Overnight Delivery Service:
Bonneville Power Administration – TSE/TPP-2
7500 NE 41st Street – Suite 130
Vancouver, WA 98662

If to the Puget:

Attention:
Phone:
Fax:
Email:

If by First Class Mail:

Puget Sound Energy, Inc.
P.O. Box 97034
Bellevue, WA 98009-9734

If by Overnight Delivery Service:
Puget Sound Energy, Inc.
10885 N.E. 4th Street, Suite 1100
Bellevue, WA 98004-5591

Department of Energy

Bonneville Power Administration
P.O. Box 61409
Vancouver, WA 98666-1409

TRANSMISSION SERVICES

July 22, 2014

In reply refer to: TSE/TPP-2

Contract No. 14TX-16053
Letter Agreement

Ms. Booga Gilbertson
Vice President, Operations Services
Puget Sound Energy, Inc.
10885 NE 4th Street, PSE – 11S
Bellevue, WA 98004

Mr. Phillip West
Customer Service Energy Officer
City of Seattle, City Light Department
700 Fifth Avenue, Suite 2822
Seattle, WA 98104-5031

Dear Ms. Gilbertson and Mr. West:

The Bonneville Power Administration (BPA), Puget Sound Energy, Inc, (PSE) and City of Seattle, City Light Department (SCL) are parties to the Memorandum of Agreement (MOA), Contract No. 11TX-15450, relating to the Preferred Puget Sound Area Plan of Service Projects and Cost Allocation. The parties to the MOA are currently in the initial stages of development of the projects described in the MOA. As this has progressed, certain aspects of the MOA were identified that the parties believe need to be clarified.

This Agreement is intended to clarify the scope changes related to the Covington 500 kV Transformer Addition Project described in Section 3(a) of the MOA and the Bothell to SnoKing Reconductor Project described in Section 3(c) of the MOA.

BPA's transformer addition originally planned for Covington Substation has been moved to Raver Substation. There is no change in financial responsibility under the MOA due to this relocation.

The Bothell to SnoKing Reconductor Project was identified in the MOA as an SCL project. However, during subsequent discussions it was discovered that BPA owns the first ½ mile of these lines on the SnoKing end. BPA will rebuild its owned portion of these lines at its cost, including any necessary replacement of equipment within SnoKing Substation associated with these lines.

In order to meet the project schedule, please sign all originals of this Agreement, retain one original for your records and return the remaining two originals to my attention at one of the following addresses at your earliest convenience, but not later than Close of Business on August 30, 2014:

First Class Mail	Overnight Delivery Service
Bonneville Power Administration Mail Stop: TSE/TPP-2 P.O. Box 61409 Vancouver, WA 98666-1409	Bonneville Power Administration Mail Stop: TSE/TPP-2 7500 NE 41st Street – Suite 130 Vancouver, WA 98662

BPA will ensure that Puget and SCL have a full set of original signature pages.

If you have any questions, please call me at (360) 619-6015.

Sincerely,

Toni L. Timberman
Senior Transmission Account Executive
Transmission Sales

CONCUR:

PUGET SOUND ENERGY, INC.

By: _____

Name: _____
(Print/Type)

Title: _____

Date: _____

CITY OF SEATTLE,
CITY LIGHT DEPARTMENT

By: _____

Name: _____
(Print/Type)

Title: _____

Date: _____

bcc:
C. Olsen– KSC-TPP-1
B. Bennett – LT-7
J. Weiss – TPCV/COVINGTON
T. Timberman – TSE/TPP-2
P. Gibson – TSES/TPP-2
Customer File – TS/-TPP-2 (TM-11, Puget Sound Energy, Inc.)
Customer File – TSE/TPP-2 (TM-11, City of Seattle, City Light Department.)
Official File – CCM Support

(W:\CT\Puget Sound Energy, Inc\Drafts\16053_PSE-SCL-PSANI MOA SCOPE CHANGE LTR AGMT.Doc)

Department of Energy

Bonneville Power Administration
P.O. Box 61409
Vancouver, WA 98666-1409

TRANSMISSION SERVICES

August XX, 2014

In reply refer to: TSE/TPP-2

Contract No. 14TX-16054
Letter Agreement

Ms. Booga Gilbertson, Vice President,
Operations Services
Puget Sound Energy, Inc.
10885 NE 4th Street, PSE – 11S
Bellevue, WA 98004

Dear Ms. Gilbertson:

The Bonneville Power Administration (BPA), Puget Sound Energy, Inc, (PSE) and City of Seattle, City Light Department (SCL) are parties to the Memorandum of Agreement (MOA), Contract No. 11TX-15450, relating to the Preferred Puget Sound Area Plan of Service Projects and Cost Allocation. The parties to the MOA are currently in the initial stages of development of the projects described in the MOA. As this has progressed, certain aspects of the MOA were identified that the parties believe need to be clarified.

This Agreement is intended to clarify the use of BPA funds contributed toward the adjusted projected capital cost of the Puget Preferred Plan Projects described in Sections 4(c) and 5(a) of the MOA.

The parties acknowledge that BPA is not involved in any manner or capacity in PSE's Sammamish to Lakeside to Talbot Rebuild Project and agree that no BPA funds provided under the MOA will be allocated to PSE's Sammamish to Lakeside to Talbot Rebuild Project. Instead, all BPA funds under the MOA will be allocated to PSE's Lakeside 230 kV Transformer Addition Project as well as the other BPA and SCL Preferred Plan Projects identified in the MOA.

In order to meet the project schedule, please sign both originals of this Agreement, retain one original for your records and return the remaining original to my attention at one of the following addresses at your earliest convenience, but not later than Close of Business on
August 30, 2014:

<u>First Class Mail</u>

Bonneville Power Administration
Mail Stop: TSE/TPP-2
P.O. Box 61409
Vancouver, WA 98666-1409

<u>Overnight Delivery Service</u>

Bonneville Power Administration
Mail Stop: TSE/TPP-2
7500 NE 41st Street – Suite 130
Vancouver, WA 98662

If you have any questions, please call me at (360) 619-6015.

Sincerely,

Toni L. Timberman
Senior Transmission Account Executive
Transmission Sales

CONCUR:

PUGET SOUND ENERGY, INC.

By: _____

Name: _____
(Print/Type)

Title: _____

Date: _____

bcc:

C. Olsen– KSC-TPP-1
B. Bennett – LT-7
J. Weiss – TPCV/COVINGTON
T. Timberman – TSE/TPP-2
P. Gibson – TSES/TPP-2
Customer File – TS/-TPP-2 (TM-11, Puget Sound Energy, Inc.)
Customer File – TSE/TPP-2 (TM-11, City of Seattle, City Light Department.)
Official File – CCM Support

(W:\CT\Puget Sound Energy, Inc\Drafts\16054_PSE_USE OF FUNDS.Doc)

Department of Energy

Bonneville Power Administration
P.O. Box 61409
Vancouver, WA 98666-1409

TRANSMISSION SERVICES

August XX, 2014

In reply refer to: TSE/TPP-2

Contract No. 14TX-16060
Letter Agreement

Ms. Booga Gilbertson
Vice President Operations Services
Puget Sound Energy, Inc.
P.O. Box 90868
Bellevue, WA 98009-0868

Mr. Phillip West
Customer Service Energy Officer
City of Seattle, City Light Department
700 Fifth Ave., Suite 2822
Seattle, WA 98104-5031

Dear Ms. Gilbertson and Mr. West:

The Bonneville Power Administration (BPA), Puget Sound Energy, Inc., (PSE) and City of Seattle, City Light Department (SCL) are parties to the Memorandum of Agreement (MOA), Contract No. 11TX-15450, relating to the Preferred Puget Sound Area Plan of Service Projects and Cost Allocation. The parties to the MOA are currently in the initial stages of development of the projects described in the MOA. As this has progressed, certain aspects of the MOA were identified that the parties believe need to be clarified.

This Agreement is intended to clarify BPA's obligations under the National Environmental Policy Act (NEPA) for its role in the MOA, as described in Section 8 of the MOA, as well as the nature of the Preferred Plan Projects described in the MOA for the purposes of NEPA.

With respect to environmental compliance BPA, as a Federal agency, has certain obligations and responsibilities under NEPA and other federal laws (collectively the NEPA review process) that it must fulfill before it can make a final decision concerning whether to participate in implementation of certain of the Preferred Plan Projects described in Section 3 of the MOA and the capital cost allocation described in Sections 4 and 5 of the MOA. Nothing in the MOA shall be construed as obligating or committing BPA to make a final decision concerning any of the Preferred Plan Projects and capital cost allocation before completing the NEPA review process. In addition, BPA reserves the right to determine the appropriate NEPA and other environmental compliance strategies for its actions under the MOA, and to choose any alternatives considered in the NEPA process, including the no-action alternative.

Furthermore, the parties acknowledge and agree that while the MOA identifies a number of Preferred Plan Projects to be undertaken by the parties, each of these projects could proceed independently from the others and that no single project is contingent or dependent upon another in the goal of relieving transmission congestion in the Puget Sound Area. As such, BPA, SCL, and PSE may elect to conduct separate environmental reviews for each project identified in the MOA.

In order to meet the project schedule, please sign all originals of this Agreement, retain one original for your records and return the remaining two originals to my attention at one of the following addresses at your earliest convenience, but not later than Close of Business on August x, 2014:

Formatted: Font: 11 pt

Formatted: Font: 11 pt

First Class Mail	Overnight Delivery Service
Bonneville Power Administration	Bonneville Power Administration
Mail Stop: TSE/TPP-2	Mail Stop: TSE/TPP-2
P.O. Box 61409	7500 NE 41st Street – Suite 130
Vancouver, WA 98666-1409	Vancouver, WA 98662

BPA will ensure that Puget and SCL have a full set of original signature pages.

Please do not hesitate to contact Justin Moffett at (503) 230-3233 or me at (360) 619-6015 if you would like to discuss this information.

Sincerely,

Toni L. Timberman
Senior Transmission Account Executive
Transmission Sales

CONCUR:

Formatted: Font: Times New Roman

PUGET SOUND ENERGY, INC.

By: _____

Name: _____
(Print/Type)

Title: _____

Date: _____

CITY OF SEATTLE,
CITY LIGHT DEPARTMENT

By: _____

Name: _____
(Print/Type)

Title: _____

Date: _____

Department of Energy

Bonneville Power Administration
P.O. Box 61409
Vancouver, WA 98666-1409

TRANSMISSION SERVICES

~~July 3~~August X, 2014

In reply refer to: TSE/TPP-2

Contract No. 14TX-16062
Letter Agreement

Ms. Booga Gilbertson	Mr. Phillip West
Vice President, Operations Services	Customer Service Energy Officer
Puget Sound Energy, Inc.	City of Seattle, City Light Department
10885 NE 4th Street, PSE – 11S	700 Fifth Avenue, Suite 3200
Bellevue, WA 98004	Seattle, WA 98104-5031

Dear Ms. Gilbertson and Mr. West:

The Bonneville Power Administration (BPA), the City of Seattle, City Light Department (SCL) and Puget Sound Energy, Inc. (PSE) are parties to the Memorandum of Agreement (MOA), Contract No. 11TX-15450, relating to the Preferred Puget Sound Area Plan of Service Projects and Cost Allocation. The parties to the MOA are currently in the initial stages of development of the projects described in the MOA. As this has progressed certain aspects of the MOA were identified that the parties believe need to be clarified.

This Letter Agreement is to meet the requirement in Section 7, Payment Schedule, of the MOA, which states that "The Parties shall agree in writing to the method and schedule for the cost share contributions to be made under this MOA."

BPA, Puget and Seattle agree that waiting until the completion of a project before exchanging funds (as specified in Section 7) is not the preferred course of action, given the potential for multiple years delay for completion of a project. An alternative arrangement is described below.

The following Financial Terms and Conditions shall apply to all cost sharing obligations incurred under the MOA:

FINANCIAL TERMS AND CONDITIONS STATEMENT

Each Party's cost obligation for performance of the duties associated with construction of each Preferred Plan Project shall be as specified in Sections 4 and 5 of the MOA. The cost of performing the duties associated with construction of each Preferred Plan Project shall be the actual cost of doing the work plus an overhead rate of xx% for labor and yy% for materials-,

Comment [TLT1]: Specify separate overheads for each Party?

DRAFT

representing the indirect costs of the project office plus the contractual support costs of contract negotiation, billing and accounting functions, and contract management.

Payments made to BPA shall be held in an account established for this Agreement. If BPA needs additional funds to complete the work at any time during performance of the project, BPA may request, in writing, for PSE to advance such additional funds to BPA for deposit in the account. PSE shall advance such additional funds within 30 days of BPA's written request, and BPA may temporarily stop work until PSE supplies the requested funds. If PSE does not advance such additional funds by the due date or, if at any time before completion of the project PSE elects to stop work under this Agreement, BPA will cease all work and restore, as a cost to the project at PSE's expense, government facilities and/or records (1) to their condition prior to the beginning of work under this Agreement, or (2) to some other mutually agreeable condition.

Within a reasonable time after completion of the project BPA shall make a full accounting to PSE showing the actual costs charged against the account. BPA shall either remit any unexpended balance in the account to PSE or bill for any costs in excess of the deposits in the account. PSE shall pay any excess costs within 30 days of the billing.

Payments not received within 30 days of the invoice date will accrue interest on the amount due from the invoice date to the date paid, at an annual interest rate equal to the higher of i) the prime rate (as reported in the Wall Street Journal in the first issue published during the month in which payment by PSE is due) plus 4 percent; or ii) such prime rate multiplied by 1.5.

- Language if cost is exceeding estimate in MOA –
- Periodic (every six months?) update on status of project and where it stands with respect to estimated cost
- Provisions for each party to invoice the others
- And???

Formatted: Bulleted + Level: 1 + Aligned at: 0.04" + Indent at: 0 29"

Formatted: Bulleted + Level: 1 + Aligned at: 0.04" + Indent at: 0 29"

Formatted: List Paragraph, No bullets or numbering

Formatted: Bulleted + Level: 1 + Aligned at: 0.04" + Indent at: 0 29"

Formatted: List Paragraph, No bullets or numbering

Formatted: Bulleted + Level: 1 + Aligned at: 0.04" + Indent at: 0 29"

Formatted: List Paragraph, No bullets or numbering

Please sign all three originals of this Agreement where indicated, returning two originals to BPA one of the addresses listed below at one of the following addresses. The remaining original is for your records. BPA will ensure that Puget and SCL have a full set of original signature pages.

In order to meet the project schedule, the executed Agreement must be received by ~~c~~Close of ~~b~~Business (COB) August 1, 2014. If BPA does not receive the executed Agreement by COB August 1, 2014, this offer Letter Agreement will be considered withdrawn.

First Class Mail	Overnight Delivery Service
Bonneville Power Administration	Bonneville Power Administration
Mail Stop: TSE/TPP-2	Mail Stop: TSE/TPP-2
P.O. Box 61409	7500 NE 41st Street – Suite 130
Vancouver, WA 98666-1409	Vancouver, WA 98662

DRAFT

If you have any questions, please call me at (360) 619-6015.

Sincerely,

Toni L. Timberman
Senior Transmission Account Executive
Transmission Sales

CONCUR:

PUGET SOUND ENERGY, INC.

By: _____

Name: _____
(Print/Type)

Title: _____

Date: _____

CITY OF SEATTLE,
CITY LIGHT DEPARTMENT

By: _____

Name: _____
(Print/Type)

Title: _____

Date: _____

DRAFT

bcc:
R. Shier – FRG-2
P. Walters – FRG-2
B. Bennett – LT-7
C. Hamel – TEP/TPP-1
S. Kannan – TFB/DOB-1
J. Jusupovic – TPC/TPP-4
D. Sauer – TPCC/TPP-4
T. Van Cleave – TPCC/TPP-4
J. Brank – TPCV/OLYMPIA
P. Fiedler – TPCV/TPP-4
T. Timberman – TSE/TPP-2
P. Gibson – TSES/TPP-2
Customer File – TPC/TPP-4 (ED-21-11/Tacoma Power)
Customer File – TSE/TPP-2 (TM-11/Tacoma Power)
PWA File – TPC/TPP-4 (N0310/Latest Status)
Official File – CCM_Support (Agreement 14TP-10657)

DRAFT

From: Timberman,Toni L (BPA) - TSE-TPP-2
To: Fiedler,Paul A (BPA) - TG-DITT-2
Subject: RE: PSANI Contraccts
Date: Thursday, August 21, 2014 9:07:00 AM

Ok – let me know when you want to discuss the NOA.

From: Fiedler,Paul A (BPA) - TPCV-TPP-4
Sent: Thursday, August 21, 2014 9:06 AM
To: Timberman,Toni L (BPA) - TSE-TPP-2; Jusupovic,Jana D (BPA) - TPC-TPP-4
Subject: Re: PSANI Contraccts

I don't think the meeting is necessary.
-Paul

From: Timberman,Toni L (BPA) - TSE-TPP-2
Sent: Thursday, August 21, 2014 09:05 AM
To: Jusupovic,Jana D (BPA) - TPC-TPP-4; Fiedler,Paul A (BPA) - TPCV-TPP-4
Subject: FW: PSANI Contraccts

Response from Hardev. Given this, do you believe we still need to meet?

From: Juj,Hardev S (BPA) - TP-DITT-2
Sent: Thursday, August 21, 2014 8:46 AM
To: Timberman,Toni L (BPA) - TSE-TPP-2
Cc: Moditz,Tina (BPA) - TP-DITT-2
Subject: PSANI Contraccts

Toni,

I have reviewed the documents and agree with as it clarifies our contribution. As per our discussion, I am ok if you sign those. Thanks

From: Jusupovic,Jana D (BPA) - TPC-TPP-4
To: Fiedler,Paul A (BPA) - TG-DITT-2; Timberman,Toni L (BPA) - TSE-TPP-2
Subject: RE: PSANI Contraccts
Date: Thursday, August 21, 2014 9:33:26 AM

I agree as well.

From: Fiedler,Paul A (BPA) - TPCV-TPP-4
Sent: Thursday, August 21, 2014 9:06 AM
To: Timberman,Toni L (BPA) - TSE-TPP-2; Jusupovic,Jana D (BPA) - TPC-TPP-4
Subject: Re: PSANI Contraccts

I don't think the meeting is necessary.
-Paul

From: Timberman,Toni L (BPA) - TSE-TPP-2
Sent: Thursday, August 21, 2014 09:05 AM
To: Jusupovic,Jana D (BPA) - TPC-TPP-4; Fiedler,Paul A (BPA) - TPCV-TPP-4
Subject: FW: PSANI Contraccts

Response from Hardev. Given this, do you believe we still need to meet?

From: Juj,Hardev S (BPA) - TP-DITT-2
Sent: Thursday, August 21, 2014 8:46 AM
To: Timberman,Toni L (BPA) - TSE-TPP-2
Cc: Moditz,Tina (BPA) - TP-DITT-2
Subject: PSANI Contraccts

Toni,

I have reviewed the documents and agree with as it clarifies our contribution. As per our discussion, I am ok if you sign those. Thanks

From: Timberman,Toni L (BPA) - TSE-TPP-2
To: Brookshire,Sherry S (BPA) - T-DITT-2
Subject: FW: PSANI Contraccts
Date: Thursday, August 21, 2014 10:45:00 AM

From: Timberman,Toni L (BPA) - TSE-TPP-2
Sent: Thursday, August 21, 2014 9:37 AM
To: Juj,Hardev S (BPA) - TP-DITT-2
Cc: Moditz,Tina (BPA) - TP-DITT-2
Subject: Re: PSANI Contraccts

Tina, please cancel this meeting.
Thanks for your help!
Toni

From: Juj,Hardev S (BPA) - TP-DITT-2
Sent: Thursday, August 21, 2014 08:46 AM Pacific Standard Time
To: Timberman,Toni L (BPA) - TSE-TPP-2
Cc: Moditz,Tina (BPA) - TP-DITT-2
Subject: PSANI Contraccts

Toni,

I have reviewed the documents and agree with as it clarifies our contribution. As per our discussion, I am ok if you sign those. Thanks

From: Timberman,Toni L (BPA) - TSE-TPP-2
To: "john.phillips@pse.com"
Subject: PSANI MOA
Date: Friday, August 29, 2014 9:37:00 AM

Hi John,
I don't know your travel arrangements for Sept 17, but I was wondering if you would like me to schedule a discussion regarding the funding of the Puget projects either before or after our other meetings.
Toni

From: Marleau,Michael L (BPA) - TEP-TPP-1
To: Timberman,Toni L (BPA) - TSE-TPP-2
Subject: RE: PSANI meeting with Seattle City Light and Puget Sound Energy
Date: Monday, September 08, 2014 7:29:12 AM

No problem Toni. I'll talk to Uzma about setting up a conf. call.

Thanks,

Mike

-----Original Appointment-----
From: Timberman,Toni L (BPA) - TSE-TPP-2
Sent: Friday, September 05, 2014 12:57 PM
To: Marleau,Michael L (BPA) - TEP-TPP-1
Subject: Tentative: PSANI meeting with Seattle City Light and Puget Sound Energy
When: Thursday, September 25, 2014 8:00 AM-8:30 AM (UTC-08:00) Pacific Time (US & Canada).
Where: Seattle (TBD)

HI Mike,

My plans have changed so that I am no longer going to be in Seattle for this meeting. I am having work done at my house that week which requires me to stay close to home.

If this meeting is still on, perhaps I can call in?

Toni

From: Timberman,Toni L (BPA) - TSE-TPP-2
To: "Siddiqi, Uzma"
Subject: RE: PSANI Semi-Annual BPA/SCL/PSE MOA Meeting
Date: Tuesday, September 09, 2014 2:16:00 PM

HI Uzma,

The SCL structure capacity should be discussed during the PM meeting on the 25th, and any changes that are needed to accommodate the connection should be included in the design. That is a more appropriate place to mitigate any impact. The letter simply addresses scope, not construction details.

I will be having 22 trees removed from my property. They are 120' poplars which are huge, old and half dead, and they will be falling into my field, which also contains my daughter's house and my septic system. I think it will take about 3 days for them to do the work and I need to be around in case one lands on the house, etc. The following week I will have the old barbed wire fence which will be destroyed by the falling trees replaced with nice horse fence. I have been making these arrangements since May and have been panicking because I wanted it all done before the fall rains start, and plans finally came together. It is working out great except for not being able to travel during that time.

Fun and games and lots of $$$.

Toni

From: Siddiqi, Uzma [mailto:Uzma.Siddiqi@seattle.gov]
Sent: Tuesday, September 09, 2014 2:06 PM
To: Timberman,Toni L (BPA) - TSE-TPP-2
Cc: Lin, Jimmy
Subject: RE: PSANI Semi-Annual BPA/SCL/PSE MOA Meeting

Toni,
We will miss you on the 25th!

Regarding the letters:
I am meeting with our lawyer to review the four letters next week. (And discussing the SCL letter that needs to parallel the BPA letter to PSE about the transformer.)

One thing is that we'd like to make sure that the BO-SK letter states that BPA rebuild will not negatively impact SCL and if it does BPA will mitigate the impacts. (BPA is planning on using bundled conductor which the SCL structure is not designed to support.)

Thanks,
Uzma

From: Timberman,Toni L (BPA) - TSE-TPP-2 [mailto:tltimberman@bpa.gov]
Sent: Tuesday, September 09, 2014 10:47 AM

To: Siddiqi, Uzma
Subject: RE: PSANI Semi-Annual BPA/SCL/PSE MOA Meeting

Hi Uzma,

I will not be able to attend this meeting in Seattle, but would like to call in if possible.

Did you get a chance to review the 4 draft letters I sent?

Thanks,
Toni

-----Original Appointment-----
From: Siddiqi, Uzma [mailto:Uzma.Siddiqi@seattle.gov]
Sent: Monday, September 08, 2014 9:32 AM
To: Marleau,Michael L (BPA) - TEP-TPP-1; Kostek, Leann; Timberman,Toni L (BPA) - TSE-TPP-2
Subject: PSANI Semi-Annual BPA/SCL/PSE MOA Meeting
When: Thursday, September 25, 2014 10:00 AM-12:00 PM (UTC-08:00) Pacific Time (US & Canada).
Where: SCL_SMT_ConfRm3205-18

PSANI Semi-Annual BPA/SCL/PSE MOA Meeting

Meeting will be on 32nd Floor of Seattle Municipal Tower, 700 5th Ave, Seattle, WA.

From: Timberman,Toni L (BPA) - TSE-TPP-2
To: "Siddiqi, Uzma"
Subject: RE: PSANI Semi-Annual BPA/SCL/PSE MOA Meeting
Date: Tuesday, September 09, 2014 10:47:00 AM

Hi Uzma,

I will not be able to attend this meeting in Seattle, but would like to call in if possible.

Did you get a chance to review the 4 draft letters I sent?

Thanks,

Toni

-----Original Appointment-----
From: Siddiqi, Uzma [mailto:Uzma.Siddiqi@seattle.gov]
Sent: Monday, September 08, 2014 9:32 AM
To: Marleau,Michael L (BPA) - TEP-TPP-1; Kostek, Leann; Timberman,Toni L (BPA) - TSE-TPP-2
Subject: PSANI Semi-Annual BPA/SCL/PSE MOA Meeting
When: Thursday, September 25, 2014 10:00 AM-12:00 PM (UTC-08:00) Pacific Time (US & Canada).
Where: SCL_SMT_ConfRm3205-18

PSANI Semi-Annual BPA/SCL/PSE MOA Meeting

Meeting will be on 32nd Floor of Seattle Municipal Tower, 700 5th Ave, Seattle, WA.

From:	Timberman,Toni L (BPA) - TSE-TPP-2
To:	Gibson,Paula L (BPA) - TSES-TPP-2
Subject:	RE: Puget Letter Agreements
Date:	Friday, September 12, 2014 10:36:00 AM
Attachments:	image001.jpg

No response yet on the PSANI letters from either Puget or Seattle. I will check my notes to see what John said about the st. clair letter.

From: Gibson,Paula L (BPA) - TSES-TPP-2
Sent: Friday, September 12, 2014 9:27 AM
To: Timberman,Toni L (BPA) - TSE-TPP-2
Subject: Puget Letter Agreements

Just checking on the status of the Puget Letter Agreements for St. Clair and PSANI, has Puget reviewed, should I start ISR review?

bpalogo_Ext_jpg

Paula Gibson
Transmission Account Specialist
(360) 619-6113
E-Mail: plgibson@bpa.gov

From: Jusupovic,Jana D (BPA) - TPC-TPP-4
To: Timberman,Toni L (BPA) - TSE-TPP-2
Subject: RE: FTC Letter Agreement DRAFT for PSANI MOA
Date: Monday, September 15, 2014 8:37:20 AM

We're finally moved in!
It was a rough weekend, but well worth it to call this house our new home! :)

Thank you for the heads up regarding an all day stay, I would usually do an all day but since we now live so close a half day works just fine!
George is loving the new backyard, He's never seen so much grass in one area, Ha!
Oh Condo life, it's nice to move on!

Have a great Monday Toni.

-----Original Message-----
From: Timberman,Toni L (BPA) - TSE-TPP-2
Sent: Friday, September 12, 2014 3:31 PM
To: Jusupovic,Jana D (BPA) - TPC-TPP-4
Subject: RE: FTC Letter Agreement DRAFT for PSANI MOA

How exciting for you...and George! Gizzard is normally at day care on Tuesday and Thursday mornings, so they might be buddies. There is a little Jack Russell filly who is smitten with Gizzard and wants to play all the time. He comes home exhausted with a smile on his face!

Beware - full day is too much for Gizzard so you might want to watch that with George and see how he does. I never plan on a full day but sometimes I get hung up here and cannot pick him up at lunch time, and then he is just a tired pooch flat on the floor all evening.

-----Original Message-----
From: Jusupovic,Jana D (BPA) - TPC-TPP-4
Sent: Friday, September 12, 2014 3:24 PM
To: Timberman,Toni L (BPA) - TSE-TPP-2
Subject: RE: FTC Letter Agreement DRAFT for PSANI MOA

Oh good, glad they haven't asked for them!
I agree, it's been putting out fire after fire these days...

Have a great weekend Toni, we move into our new home tomorrow and George is checking out Tails R Waggin next week :)

-----Original Message-----
From: Timberman,Toni L (BPA) - TSE-TPP-2
Sent: Friday, September 12, 2014 3:19 PM
To: Jusupovic,Jana D (BPA) - TPC-TPP-4
Subject: RE: FTC Letter Agreement DRAFT for PSANI MOA

Thanks, Jana. No worries - I have been too busy to think about this, and Seattle and Puget have not yet reviewed the other agreements.
Toni

-----Original Message-----
From: Jusupovic,Jana D (BPA) - TPC-TPP-4
Sent: Friday, September 12, 2014 3:18 PM
To: Timberman,Toni L (BPA) - TSE-TPP-2
Subject: FTC Letter Agreement DRAFT for PSANI MOA

Importance: High

Hi Toni,

Here is the first TPC cut on the potential FTC letter agreement language for PSANI,

Please let us know what you think, my apologizes for the delay!

Jana

-----Original Message-----
From: Sauer,Dena J (BPA) - TPCC-TPP-4
Sent: Friday, August 22, 2014 2:37 PM
To: Jusupovic,Jana D (BPA) - TPC-TPP-4
Cc: Van Cleave,Tonya M (BPA) - TPCC-TPP-4
Subject: RE: Letter Agreements for PSANI MOA

Jana,
As promised at our last meeting on PSANI, attached is my first cut at developing the new financial language. Let me know if you have any questions.

Thanks,
Dena

-----Original Message-----
From: Sauer,Dena J (BPA) - TPCC-TPP-4
Sent: Wednesday, August 13, 2014 12:04 PM
To: Jusupovic,Jana D (BPA) - TPC-TPP-4; Van Cleave,Tonya M (BPA) - TPCC-TPP-4
Subject: FW: Letter Agreements for PSANI MOA
Importance: High

The financial language in the draft of 16062 doesn't really fit (it describes the process for BPA seeking reimbursement from others) and may cause some confusion if sent as-is. I am also thinking it might be helpful to re-state the cost allocation provisions described in the MOA (Sections 4 and maybe 5?) rather than just refer to them. Otherwise someone administering the contract will have to refer to the two separate documents to determine what the financial arrangement is. Do you think that approach would be a problem for anyone?

Because this situation is so unique, it might help to have a brief sit-down with finance, legal and TEPO to discuss the approach in drafting the financial language.

-----Original Message-----
From: Jusupovic,Jana D (BPA) - TPC-TPP-4
Sent: Wednesday, August 13, 2014 10:09 AM
To: Van Cleave,Tonya M (BPA) - TPCC-TPP-4; Sauer,Dena J (BPA) - TPCC-TPP-4
Subject: FW: Letter Agreements for PSANI MOA
Importance: High

Morning Tonya and Dena,

I need some guidance...
Regarding the FTC language in the new PSANI letter agreement, do we internally suggest language and then share with the outside groups or can I simply send the draft that Toni sent out below directly to FRP and TEPO for their guidance?

I'm just making sure I'm following TPC's process regarding agreement language, but since this

agreement is coming out of TSE I'm really not sure.

Thank you for the help!

-----Original Message-----
From: Timberman,Toni L (BPA) - TSE-TPP-2
Sent: Tuesday, August 12, 2014 4:09 PM
To: Adams,Hub V (BPA) - LN-7; Moffett,Justin T (BPA) - KEC-4; Marleau,Michael L (BPA) - TEP-TPP-1; Jusupovic,Jana D (BPA) - TPC-TPP-4; Van Cleave,Tonya M (BPA) - TPCC-TPP-4; Fiedler,Paul A (BPA) - TPCV-TPP-4; Chan,Allen C (BPA) - LT-7
Cc: Gibson,Paula L (BPA) - TSES-TPP-2; Bennett,Barry (BPA) - LT-7
Subject: Letter Agreements for PSANI MOA

Attached are the latest drafts of the letter agreements to clarify the PSANI MOA. Note that Jana is still working on 16062 to clarify how $$ will change hands, so that one is still very draft.

Please let me know if you have comments on the other three. I am still working on scheduling a meeting with Hardev to get his approval to proceed with these agreements.

I have attached the PSANI MOA for your convenience.

Thanks,
Toni

From:	Kostek, Leann
To:	Marleau,Michael L (BPA) - TEP-TPP-1; "Uzma.Siddiqi@seattle.gov"; Timberman,Toni L (BPA) - TSE-TPP-2
Subject:	RE: PSANI Semi-Annual BPA/SCL/PSE MOA Meeting
Date:	Thursday, September 18, 2014 3:53:30 PM

I'm pretty open the following week

From: Marleau,Michael L (BPA) - TEP-TPP-1 [mailto:mlmarleau@bpa.gov]
Sent: Wednesday, September 17, 2014 7:32 PM
To: 'Uzma.Siddiqi@seattle.gov'; Kostek, Leann; Timberman,Toni L (BPA) - TSE-TPP-2
Subject: Re: PSANI Semi-Annual BPA/SCL/PSE MOA Meeting

Of course. I'll get back with you on some possible days.

From: Siddiqi, Uzma [mailto:Uzma.Siddiqi@seattle.gov]
Sent: Wednesday, September 17, 2014 06:02 PM
To: Siddiqi, Uzma <Uzma.Siddiqi@seattle.gov>; Marleau,Michael L (BPA) - TEP-TPP-1; Kostek, Leann <leann.kostek@pse.com>; Timberman,Toni L (BPA) - TSE-TPP-2
Subject: RE: PSANI Semi-Annual BPA/SCL/PSE MOA Meeting

Can we reschedule this meeting on 9/25?

(Toni will not be able make this meeting and since the Letter Agreements she has drafted are a key topic of discussion, I'd like to reschedule.)
Thanks,
Uzma

From: Siddiqi, Uzma
Sent: Monday, September 08, 2014 9:32 AM
Required: Siddiqi, Uzma; 'Marleau,Michael L (BPA) - TEP-TPP-1'; Kostek, Leann; Timberman,Toni L (BPA) - TSE-TPP-2
Subject: PSANI Semi-Annual BPA/SCL/PSE MOA Meeting
When: Thursday, September 25, 2014 10:00 AM-12:00 PM.
Where: SCL_SMT_ConfRm3205-18

PSANI Semi-Annual BPA/SCL/PSE MOA Meeting

Meeting will be on 32nd Floor of Seattle Municipal Tower, 700 5th Ave, Seattle, WA.

From: Siddiqi, Uzma
To: Timberman,Toni L (BPA) - TSE-TPP-2
Subject: RE: PSANI Semi-Annual BPA/SCL/PSE MOA Meeting
Date: Friday, September 19, 2014 10:22:26 AM

Thanks for that clarification. I guess at SCL I wear both hats.
When do you want to meet to discuss these? I met with our lawyer and we will have comments by the end of the month.

Uzma

From: Timberman,Toni L (BPA) - TSE-TPP-2 [mailto:tltimberman@bpa.gov]
Sent: Friday, September 19, 2014 8:44 AM
To: Siddiqi, Uzma
Subject: FW: PSANI Semi-Annual BPA/SCL/PSE MOA Meeting

Uzma, I consider the letter agreements to be an issue to be discussed between you, me and John Phillips rather than with the project managers. Please do not reschedule this project management meeting in order to provide for a discussion of the letters -

---

From: Kostek, Leann [mailto:leann.kostek@pse.com]
Sent: Thursday, September 18, 2014 3:52 PM
To: Marleau,Michael L (BPA) - TEP-TPP-1; 'Uzma.Siddiqi@seattle.gov'; Timberman,Toni L (BPA) - TSE-TPP-2
Subject: RE: PSANI Semi-Annual BPA/SCL/PSE MOA Meeting

I'm pretty open the following week

From: Marleau,Michael L (BPA) - TEP-TPP-1 [mailto:mlmarleau@bpa.gov]
Sent: Wednesday, September 17, 2014 7:32 PM
To: 'Uzma.Siddiqi@seattle.gov'; Kostek, Leann; Timberman,Toni L (BPA) - TSE-TPP-2
Subject: Re: PSANI Semi-Annual BPA/SCL/PSE MOA Meeting

Of course. I'll get back with you on some possible days.

From: Siddiqi, Uzma [mailto:Uzma.Siddiqi@seattle.gov]
Sent: Wednesday, September 17, 2014 06:02 PM
To: Siddiqi, Uzma <Uzma.Siddiqi@seattle.gov>; Marleau,Michael L (BPA) - TEP-TPP-1; Kostek, Leann <leann.kostek@pse.com>; Timberman,Toni L (BPA) - TSE-TPP-2
Subject: RE: PSANI Semi-Annual BPA/SCL/PSE MOA Meeting

Can we reschedule this meeting on 9/25?

(Toni will not be able make this meeting and since the Letter Agreements she has drafted are a key topic of discussion, I'd like to reschedule.)
Thanks,
Uzma

From: Siddiqi, Uzma
Sent: Monday, September 08, 2014 9:32 AM
Required: Siddiqi, Uzma; 'Marleau,Michael L (BPA) - TEP-TPP-1'; Kostek, Leann; Timberman,Toni L (BPA) - TSE-TPP-2

Subject: PSANI Semi-Annual BPA/SCL/PSE MOA Meeting
When: Thursday, September 25, 2014 10:00 AM-12:00 PM.
Where: SCL_SMT_ConfRm3205-18

PSANI Semi-Annual BPA/SCL/PSE MOA Meeting

Meeting will be on 32nd Floor of Seattle Municipal Tower, 700 5th Ave, Seattle, WA.

From: Timberman,Toni L (BPA) - TSE-TPP-2
To: Jusupovic,Jana D (BPA) - TPC-TPP-4
Subject: RE: FTC Letter Agreement DRAFT for PSANI MOA
Date: Tuesday, September 23, 2014 10:05:00 AM

Give me a call...

-----Original Message-----
From: Jusupovic,Jana D (BPA) - TPC-TPP-4
Sent: Tuesday, September 23, 2014 10:04 AM
To: Timberman,Toni L (BPA) - TSE-TPP-2
Subject: RE: FTC Letter Agreement DRAFT for PSANI MOA

Yes, definitely ask for their feedback.
If you'd rather have bi-annually that works too, I just wanted to let you know quarterly is possible and that's what Michele is doing now for Mid-C.

(b) (5) [redacted]

-----Original Message-----
From: Timberman,Toni L (BPA) - TSE-TPP-2
Sent: Tuesday, September 23, 2014 9:59 AM
To: Jusupovic,Jana D (BPA) - TPC-TPP-4
Subject: RE: FTC Letter Agreement DRAFT for PSANI MOA

Ok - I will send this off to Puget and Seattle and get their comments.

(b) (5) [redacted]

-----Original Message-----
From: Jusupovic,Jana D (BPA) - TPC-TPP-4
Sent: Tuesday, September 23, 2014 9:55 AM
To: Timberman,Toni L (BPA) - TSE-TPP-2
Subject: RE: FTC Letter Agreement DRAFT for PSANI MOA

We are doing it now with Mid-C; Michele Holst is the lead on it.
However, my concern is Michele will only be with us until next May... After that I'm not sure who would take over her role. :./

-----Original Message-----
From: Timberman,Toni L (BPA) - TSE-TPP-2
Sent: Tuesday, September 23, 2014 9:49 AM
To: Jusupovic,Jana D (BPA) - TPC-TPP-4
Subject: RE: FTC Letter Agreement DRAFT for PSANI MOA

Jana, I think this looks fine, but quarterly invoicing might be a bit much. Would BPA be able to issue quarterly invoices to a customer for a project such as this?

-----Original Message-----
From: Jusupovic,Jana D (BPA) - TPC-TPP-4
Sent: Friday, September 12, 2014 3:18 PM

To: Timberman,Toni L (BPA) - TSE-TPP-2
Subject: FTC Letter Agreement DRAFT for PSANI MOA
Importance: High

Hi Toni,

Here is the first TPC cut on the potential FTC letter agreement language for PSANI,

Please let us know what you think, my apologizes for the delay!

Jana

-----Original Message-----
From: Sauer,Dena J (BPA) - TPCC-TPP-4
Sent: Friday, August 22, 2014 2:37 PM
To: Jusupovic,Jana D (BPA) - TPC-TPP-4
Cc: Van Cleave,Tonya M (BPA) - TPCC-TPP-4
Subject: RE: Letter Agreements for PSANI MOA

Jana,
As promised at our last meeting on PSANI, attached is my first cut at developing the new financial language. Let me know if you have any questions.

Thanks,
Dena

-----Original Message-----
From: Sauer,Dena J (BPA) - TPCC-TPP-4
Sent: Wednesday, August 13, 2014 12:04 PM
To: Jusupovic,Jana D (BPA) - TPC-TPP-4; Van Cleave,Tonya M (BPA) - TPCC-TPP-4
Subject: FW: Letter Agreements for PSANI MOA
Importance: High

The financial language in the draft of 16062 doesn't really fit (it describes the process for BPA seeking reimbursement from others) and may cause some confusion if sent as-is. I am also thinking it might be helpful to re-state the cost allocation provisions described in the MOA (Sections 4 and maybe 5?) rather than just refer to them. Otherwise someone administering the contract will have to refer to the two separate documents to determine what the financial arrangement is. Do you think that approach would be a problem for anyone?

Because this situation is so unique, it might help to have a brief sit-down with finance, legal and TEPO to discuss the approach in drafting the financial language.

-----Original Message-----
From: Jusupovic,Jana D (BPA) - TPC-TPP-4
Sent: Wednesday, August 13, 2014 10:09 AM
To: Van Cleave,Tonya M (BPA) - TPCC-TPP-4; Sauer,Dena J (BPA) - TPCC-TPP-4
Subject: FW: Letter Agreements for PSANI MOA
Importance: High

Morning Tonya and Dena,

I need some guidance...
Regarding the FTC language in the new PSANI letter agreement, do we internally suggest language and then share with the outside groups or can I simply send the draft that Toni sent out below directly to FRP and TEPO for their guidance?

I'm just making sure I'm following TPC's process regarding agreement language, but since this agreement is coming out of TSE I'm really not sure.

Thank you for the help!

-----Original Message-----
From: Timberman,Toni L (BPA) - TSE-TPP-2
Sent: Tuesday, August 12, 2014 4:09 PM
To: Adams,Hub V (BPA) - LN-7; Moffett,Justin T (BPA) - KEC-4; Marleau,Michael L (BPA) - TEP-TPP-1; Jusupovic,Jana D (BPA) - TPC-TPP-4; Van Cleave,Tonya M (BPA) - TPCC-TPP-4; Fiedler,Paul A (BPA) - TPCV-TPP-4; Chan,Allen C (BPA) - LT-7
Cc: Gibson,Paula L (BPA) - TSES-TPP-2; Bennett,Barry (BPA) - LT-7
Subject: Letter Agreements for PSANI MOA

Attached are the latest drafts of the letter agreements to clarify the PSANI MOA. Note that Jana is still working on 16062 to clarify how $$ will change hands, so that one is still very draft.

Please let me know if you have comments on the other three. I am still working on scheduling a meeting with Hardev to get his approval to proceed with these agreements.

I have attached the PSANI MOA for your convenience.

Thanks,
Toni

From: Jusupovic,Jana D (BPA) - TPC-TPP-4
To: Timberman,Toni L (BPA) - TSE-TPP-2
Subject: RE: Conf call for PSANI MOA Letter Agreements
Date: Tuesday, September 30, 2014 4:45:03 PM

Glad you're scheduling this! I am free all three days ☺

From: Timberman,Toni L (BPA) - TSE-TPP-2
Sent: Tuesday, September 30, 2014 11:13 AM
To: Jusupovic,Jana D (BPA) - TPC-TPP-4; 'Uzma Siddiqi (uzma.siddiqi@seattle.gov)'; 'john.phillips@pse.com'
Subject: Conf call for PSANI MOA Letter Agreements

I would like to schedule a conference call to discuss the draft PSANI MOA Letter Agreements.

Please let me know your first and second choices from the following options:

- Friday October 3 anytime between 1:00 and 4:00;
- Tuesday October 14 – anytime (suggest what works best for you)
- Thursday October 16 9:30-10:30 or 1:00-2:00

I have attached the draft agreements for your reference, along with the one for the financial which had not been previously sent.

Thanks,
Toni
Toni L. Timberman
Senior Transmission Account Executive
Bonneville Power Administration
(360) 619-6015 office
(b) (6) [redacted]
tltimberman@bpa.gov

Department of Energy

Bonneville Power Administration
P.O. Box 61409
Vancouver, WA 98666-1409

TRANSMISSION SERVICES

~~July 3~~August X, 2014

In reply refer to: TSE/TPP-2

Contract No. 14TX-16062
Letter Agreement

Ms. Booga Gilbertson	Mr. Phillip West
Vice President, Operations Services	Customer Service Energy Officer
Puget Sound Energy, Inc.	City of Seattle, City Light Department
10885 NE 4th Street, PSE – 11S	700 Fifth Avenue, Suite 3200
Bellevue, WA 98004	Seattle, WA 98104-5031

Dear Ms. Gilbertson and Mr. West:

The Bonneville Power Administration (BPA), the City of Seattle, City Light Department (SCL) and Puget Sound Energy, Inc. (PSE) are parties to the Memorandum of Agreement (MOA), Contract No. 11TX-15450, relating to the Preferred Puget Sound Area Plan of Service Projects and Cost Allocation. The parties to the MOA are currently in the initial stages of development of the projects described in the MOA. As this has progressed certain aspects of the MOA were identified that the parties believe need to be clarified.

This Letter Agreement is to meet the requirement in Section 7, Payment Schedule, of the MOA, which states that "The Parties shall agree in writing to the method and schedule for the cost share contributions to be made under this MOA."

BPA, Puget and Seattle agree that waiting until the completion of a project before exchanging funds (as specified in Section 7) is not the preferred course of action, given the potential for multiple years delay for completion of a project. An alternative arrangement is described below.

The following Financial Terms and Conditions shall apply to all cost sharing obligations incurred under the MOA:

FINANCIAL TERMS AND CONDITIONS STATEMENT

Each Party's cost obligation for performance of the duties associated with construction of each Preferred Plan Project shall be as specified in Sections 4 and 5 of the MOA. The cost of performing the duties associated with construction of each Preferred Plan Project shall be the actual cost of doing the work plus an overhead rate of xx% for labor and yy% for materials-,

Comment [TLT1]: Specify separate overheads for each Party?

DRAFT

representing the indirect costs of the project office plus the contractual support costs of contract negotiation, billing and accounting functions, and contract management.

Payments made to BPA shall be held in an account established for this Agreement. If BPA needs additional funds to complete the work at any time during performance of the project, BPA may request, in writing, for PSE to advance such additional funds to BPA for deposit in the account. PSE shall advance such additional funds within 30 days of BPA's written request, and BPA may temporarily stop work until PSE supplies the requested funds. If PSE does not advance such additional funds by the due date or, if at any time before completion of the project PSE elects to stop work under this Agreement, BPA will cease all work and restore, as a cost to the project at PSE's expense, government facilities and/or records (1) to their condition prior to the beginning of work under this Agreement, or (2) to some other mutually agreeable condition.

Within a reasonable time after completion of the project BPA shall make a full accounting to PSE showing the actual costs charged against the account. BPA shall either remit any unexpended balance in the account to PSE or bill for any costs in excess of the deposits in the account. PSE shall pay any excess costs within 30 days of the billing.

Payments not received within 30 days of the invoice date will accrue interest on the amount due from the invoice date to the date paid, at an annual interest rate equal to the higher of i) the prime rate (as reported in the Wall Street Journal in the first issue published during the month in which payment by PSE is due) plus 4 percent; or ii) such prime rate multiplied by 1.5.

- Language if cost is exceeding estimate in MOA –
- Periodic (every six months?) update on status of project and where it stands with respect to estimated cost
- Provisions for each party to invoice the others
- And???

Formatted: Bulleted + Level: 1 + Aligned at: 0.04" + Indent at: 0 29"

Formatted: Bulleted + Level: 1 + Aligned at: 0.04" + Indent at: 0 29"

Formatted: List Paragraph, No bullets or numbering

Formatted: Bulleted + Level: 1 + Aligned at: 0.04" + Indent at: 0 29"

Formatted: List Paragraph, No bullets or numbering

Formatted: Bulleted + Level: 1 + Aligned at: 0.04" + Indent at: 0 29"

Formatted: List Paragraph, No bullets or numbering

Please sign all three originals of this Agreement where indicated, returning two originals to BPA one of the addresses listed below at one of the following addresses. The remaining original is for your records. BPA will ensure that Puget and SCL have a full set of original signature pages.

In order to meet the project schedule, the executed Agreement must be received by ~~c~~Close of ~~b~~Business (COB) August 1, 2014. If BPA does not receive the executed Agreement by COB August 1, 2014, this offer Letter Agreement will be considered withdrawn.

First Class Mail	Overnight Delivery Service
Bonneville Power Administration	Bonneville Power Administration
Mail Stop: TSE/TPP-2	Mail Stop: TSE/TPP-2
P.O. Box 61409	7500 NE 41st Street – Suite 130
Vancouver, WA 98666-1409	Vancouver, WA 98662

DRAFT

If you have any questions, please call me at (360) 619-6015.

Sincerely,

Toni L. Timberman
Senior Transmission Account Executive
Transmission Sales

CONCUR:

PUGET SOUND ENERGY, INC.

By: _____

Name: _____
(Print/Type)

Title: _____

Date: _____

CITY OF SEATTLE,
CITY LIGHT DEPARTMENT

By: _____

Name: _____
(Print/Type)

Title: _____

Date: _____

DRAFT

bcc:
R. Shier – FRG-2
P. Walters – FRG-2
B. Bennett – LT-7
C. Hamel – TEP/TPP-1
S. Kannan – TFB/DOB-1
J. Jusupovic – TPC/TPP-4
D. Sauer – TPCC/TPP-4
T. Van Cleave – TPCC/TPP-4
J. Brank – TPCV/OLYMPIA
P. Fiedler – TPCV/TPP-4
T. Timberman – TSE/TPP-2
P. Gibson – TSES/TPP-2
Customer File – TPC/TPP-4 (ED-21-11/Tacoma Power)
Customer File – TSE/TPP-2 (TM-11/Tacoma Power)
PWA File – TPC/TPP-4 (N0310/Latest Status)
Official File – CCM_Support (Agreement 14TP-10657)

DRAFT

From: Timberman,Toni L (BPA) - TSE-TPP-2
To: "Uzma Siddiqi (uzma.siddiqi@seattle.gov)"; "john.phillips@pse.com"
Subject: draft PSANI MOA letters
Date: Tuesday, August 19, 2014 2:58:00 PM
Attachments: 11TX-15450_CT_PDF.pdf
16053_PSANI_MOA_SCOPE_CHANGE_LTR_AGMT.doc
16054_PSANI_MOA_USE_OF_FUNDS_LTR_AGMT.doc
16060_PSANI_MOA_NEPA_LTR_AGMT_8_8_TT.doc
16062_PSANI_MOA_Financial_Terms_and_Conditions.doc

Attached are the four draft PSANI MOA letters. I also attached the MOA for your reference.

Note that the letter agreement related to how/when money changes hands is very draft, with BPA staff working to develop the language. Once the draft for that one is done, we can schedule a conf. call to work out the details with the folks that need to weigh in.

The other three look pretty good and have passed BPA legal review. They also have been reviewed by BPA environmental staff and the project manager.

Let me know what you think.

Toni

Contract No. 11TX-15450

MEMORANUDUM OF AGREEMENT

executed by the

UNITED STATES OF AMERICA

DEPARTMENT OF ENERGY

acting by and through the

BONNEVILLE POWER ADMINISTRATION

and

THE CITY OF SEATTLE

acting by and through its

CITY LIGHT DEPARTMENT

and

PUGET SOUND ENERGY, INC.

(Relating to the Preferred Puget Sound Area Plan of Service Projects and Cost Allocation)

This MEMORANDUM OF AGREEMENT (MOA) is executed by the UNITED STATES OF AMERICA, Department of Energy, acting by and through the BONNEVILLE POWER ADMINISTRATION (BPA), THE CITY OF SEATTLE, acting by and through its CITY LIGHT DEPARTMENT (Seattle City Light), and PUGET SOUND ENERGY INC. (Puget). BPA, Seattle City Light, and Puget are sometimes referred to individually as "Party" and collectively as "Parties".

WHEREAS, BPA owns and is responsible for the reliable operation of the Federal Columbia River Transmission System (FCRTS),

WHEREAS, Seattle City Light and Puget each own and operate electric systems that are interconnected with the FCRTS in the Puget Sound Area and electric power is delivered within those electric systems, and to or from them by BPA over the FCRTS,

WHEREAS, the Puget Sound Area experiences periods of transmission congestion that may require mitigation to maintain reliable operation of the Puget Sound Area Interconnection, including in some cases, curtailments of firm transmission service,

WHEREAS, as of February 2011, the Parties entered into Contract No. 11TX-15290, "Temporary Operational Support Program Agreement," that provides for voluntary changes in planned generation, including an increase in Puget Sound Area generation, as temporary and short-term measures for relieving forecasted transmission congestion conditions that are expected to adversely affect the reliable operation of the Puget Sound Area Interconnection,

WHEREAS, representatives from each of the Parties and other entities participated in regional studies to develop a long term plan, and implement a range of physical improvements to preserve the reliable operation of the Puget Sound Area interconnection, and reduce the need to curtail firm transmission service,

WHEREAS, the Parties have identified the projects described herein that, when taken as a whole, are expected to preserve the reliable operation of the Puget Sound Area Interconnection, and reduce the need to curtail firm transmission service; and it is in their individual and collective interests to continue to support the efforts needed to carry out these projects, and

WHEREAS, the transmission congestion affecting the Puget Sound Area interconnection is a shared problem, and the projects and cost sharing arrangements provided herein are appropriate.

NOW THEREFORE, in consideration of the mutual obligations and undertakings herein, the sufficiency of which is acknowledged, the Parties agree as follows:

1. DEFINITIONS

(a) "Bothell to SnoKing Reconductor Project" means the project identified in the Preferred Plan of Service in which Seattle City Light will reconductor the existing Bothell to SnoKing No. 1 and No. 2 230 kV lines with high-temperature conductor.

(b) "BPA Preferred Plan Projects" means, collectively, the Covington 500 kV Transformer Addition Project and the Northern Intertie Remedial Action Scheme ("RAS") Improvement Project.

(c) "Broad Street Inductor Project" means the project identified in the Preferred Plan of Service in which Seattle City Light will add series inductors (up to 10 ohm) to the Massachusetts-Broad Street 115 kV line.

(d) "ColumbiaGrid" means the Washington non-profit membership corporation formed to improve the operational efficiency, reliability, and planned expansion of the Pacific Northwest transmission grid, the

eight members of which, as of the Effective Date, are Avista Corporation; BPA; Public Utility District No. 1 of Chelan County, Washington; Public Utility District No. 2 of Grant County, Washington; Puget; Seattle City Light; Public Utility District No. 1 of Snohomish County, Washington; and Tacoma Power.

(e) "Covington 500 kV Transformer Addition Project" means the project identified in the Preferred Plan of Service in which BPA will install a third 500–230 kV transformer at the BPA Covington Substation.

(f) "Delridge to Duwamish Reconductor Project" means the project identified in the Preferred Plan of Service in which Seattle City Light will reconductor the existing Delridge to Duwamish 230 kV line with high-temperature conductor.

(g) "Lakeside 230 kV Transformer Addition Project" means the project identified in the Preferred Plan of Service in which Puget will install a 230–115 kV transformer at the Puget Lakeside Substation.

(h) "Maple Valley to SnoKing Reconductor Project" means the project identified in the Preferred Plan of Service in which Seattle City Light will reconductor the existing Maple Valley to SnoKing 230 kV line with high-temperature conductor.

(i) "North Downtown Inductor Project" means the project identified in the Preferred Plan of Service in which Seattle City Light will add series inductors (up to 10 ohm) to the East Pine-Broad Street line as part of Seattle City Light's North Downtown Substation Project.

(j) "Northern Intertie RAS Improvement Project" means the project identified in the Preferred Plan of Service in which BPA will install new software for and re-wire electrical protection devices on the Northern Intertie RAS.

(k) "Northern Intertie RAS" means the existing BPA pre-programmed set of automatic operating steps that are designed to protect the regional high voltage electric grid in the event of a loss of one of the two Custer-Monroe 500 kV lines.

(l) "Preferred Plan of Service" means the "Updated Recommended Transmission Expansion Plan for the Puget Sound Area to Support Winter South-to-North Transfers" approved by ColumbiaGrid on October 28, 2011, a copy of which is attached as Exhibit A to this MOA.

(m) "Preferred Plan Projects" means, collectively, the BPA Preferred Plan Projects, the Puget Preferred Plan Projects, and the Seattle City Light Preferred Plan Projects.

(n) "Puget Preferred Plan Projects" means the Sammamish to Lakeside to Talbot Rebuild Project and the Lakeside 230 kV Transformer Addition Project.

(o) "Sammamish to Lakeside to Talbot Rebuild Project" means the project identified in the Preferred Plan of Service in which Puget will upgrade Puget's existing Sammamish to Lakeside to Talbot 115 kV lines to 230 kV operation using Puget's existing Sammamish to Lakeside to Talbot utility corridor.

(p) "Seattle City Light Preferred Plan Projects" means the Bothell to SnoKing Reconductor Project, the Broad Street Inductor Project, the North Downtown Inductor Project, and the Delridge to Duwamish Reconductor Project.

2. TERM

The term of this MOA shall be effective on the date of execution by all Parties (Effective Date) and shall continue until the earliest to occur of the following: (i) the date of completion of the last of the Preferred Plan Projects; (ii) a Party terminates this MOA pursuant to section 5(c) of this MOA; or (iii) December 31, 2020.

3. PREFERRED PLAN OF SERVICE PROJECTED PROJECT COMPLETION SCHEDULE AND COST

(a) **BPA Preferred Plan Projects**. Each Party acknowledges that, as of the Effective Date, the projected project completions schedule and capital costs of the BPA Preferred Plan Projects are as follows:

BPA Preferred Plan Project	Projected Completion	Projected Capital Cost
1. Covington 500 kV Transformer Addition Project	2018	$56.2 million
2. Northern Intertie RAS Improvement Project	2014	$4.0 million

(b) **Puget Preferred Plan Projects.** Each Party acknowledges that, as of the Effective Date, the projected project completions schedule and capital costs of the Puget Preferred Plan Projects are as follows:

Puget Preferred Plan Project	Projected Completion	Projected Capital Cost
1. Sammamish to Lakeside to Talbot Rebuild Project	2017	$45.0 million (single circuit) or $41.3 million (double circuit)
2. Lakeside 230 kV Transformer Addition Project	2017	$22.0 million

(c) **Seattle City Light Preferred Plan Projects.** Each Party acknowledges that, as of the Effective Date, the projected project completions schedule and capital costs of the Seattle City Light Preferred Plan Projects are as follows:

Seattle City Light Preferred Plan Project	Projected Completion	Projected Capital Cost
1. Bothell to SnoKing Reconductor Project	2017	$2.5 million
2. Broad Street Inductor Project	2017	$7.3 million*
3. North Downtown Inductor Project	2017	$4.4 million*
4. Delridge to Duwamish Reconductor Project	2016	$1.9 million

(d) **Preferred Plan Project Not Planned for Construction Based On the Construction of the Puget Preferred Plan Projects.** Each Party acknowledges that, the construction of the Puget Preferred Plan Projects negates the need for the construction of the Maple Valley to

* The projected capital costs of the Broad Street Inductor Project and the North Downtown Inductor Project do not reflect any projected costs for land acquisition. As of the Effective Date, the Parties acknowledge that Seattle City Light may have to acquire land to accomplish the Broad Street Inductor Project, and the actual capital costs of the Broad Street Inductor Project will, if necessary, reflect the actual costs of land acquisition for such project. As of the Effective Date, the Parties do not anticipate that the North Downtown Inductor Project will require Seattle City Light to acquire any land.

SnoKing Reconductor Project. Each Party acknowledges that, as of the Effective Date, the projected project completions schedule and capital costs of the Maple Valley to SnoKing Reconductor Project are as follows:

Preferred Plan Project	Projected Completion	Projected Capital Cost
Maple Valley to SnoKing Reconductor Project	N/A	$16.1 million

4. PRELIMINARY CAPITAL COST ALLOCATION

As of the Effective Date of this MOA, the Parties agree to share in the capital costs of Preferred Plan Projects as follows:

(a) **BPA Preferred Plan Projects**. BPA shall pay the entire actual capital cost of each of (i) the Covington 500 kV Transformer Addition Project and (ii) the Northern Intertie RAS Improvement Project

(b) **Seattle City Light Preferred Plan Projects.** BPA, Puget, and Seattle City Light shall each pay one-third of the total actual capital cost of each of (i) the Bothell to SnoKing Reconductor Project; (ii) the Delridge to Duwamish Reconductor Project; (iii) the Broad Street Inductor Project; and (iv) the North Downtown Inductor Project.

(c) **Puget Preferred Plan Projects.** BPA and Seattle City Light shall each pay to Puget an amount equal to one-third of the adjusted projected capital cost of the Maple Valley to SnoKing Reconductor Project, which adjusted projected capital cost shall be determined as provided in the following table:

Projected Capital Cost of the Maple Valley to SnoKing Reconductor Project	=	$16.1 million * Cost Differences in Reconductor Projects

where:

Cost Differences in Reconductor Projects	=	the quotient of

(i) the sum of the actual capital costs of the Delridge to Duwamish Reconductor Project and Bothell to SnoKing Reconductor Project and

(ii) the sum of the projected capital costs of the Delridge to Duwamish Reconductor Project and Bothell to SnoKing Reconductor Project identified in section 3(c) above (i.e., $4.4 million)

5. FINAL CAPITAL COST ALLOCATION AND OPTION OF ELECTION TO CANCEL

(a) The allocations identified in section 4 are based on preliminary planning capital cost projections. The final capital cost allocation for the Seattle City Light Preferred Plan Projects shall be based on actual design and construction capital costs for each of the Seattle City Light Preferred Plan Projects, and the final capital cost allocation for the Puget Preferred Plan Projects shall be in accordance with the formula proscribed in section 4(a) above. The Parties shall review such actual design and construction capital costs and schedules and shall agree in writing to the final capital cost allocation.

(b) Each Party reserves the right to cancel any Preferred Plan Project for which such Party is the sponsor if such Party determines that

(i) the actual capital cost of such Preferred Plan Project is likely to exceed the projected capital cost of such Preferred Plan Project by a factor that is equal to or in excess of thirty percent (30%), or

(ii) the projected in-service date of the Preferred Plan Project will be more than twenty-four (24) months later than the projected completion date identified in section 3 above for such Preferred Plan Project.

If a Party elects to cancel a Preferred Plan Project for which such Party is a sponsor under this section 5(b), such Party shall provide written notice to such other Parties within five (5) days of such election. Within a reasonable period of time after receipt of such written notice, representatives of the Parties shall convene and identify alternative projects that the Parties expect will preserve the reliable operation of the Puget Sound Area Interconnection and reduce the need to curtail firm transmission service in a manner similar to the project cancelled pursuant to section 5(b). If the Parties cannot agree in good faith upon an alternative project to replace a project cancelled pursuant to section 5(b) within a reasonable period following receipt of written notice of

such termination, then any Party may terminate this MOA upon 90 days' written notice to the other Parties.

6. RESPONSIBILITY FOR ALL OTHER COSTS

(a) Each Party shall be solely responsible for the Preferred Plan Project for which such Party is the sponsor, less the contributions from the other Parties as provided in section 4. This MOA only affects the cost sharing for the Preferred Plan Projects.

(b) Each Party shall own the assets for the Preferred Plan Project for which such Party is the sponsor and shall be solely responsible for the operation and maintenance costs of such assets. Each Party shall be entitled to any capacity increases to its transmission system that results from any assets installed pursuant to this MOA.

(c) If any Party enhances a Preferred Plan Project after completion of such Preferred Plan Project to meet such Party's needs, the cost of such future enhancements shall be borne solely by such Party. Each Party shall attempt in good faith to coordinate with the other Parties with respect to any future enhancements to a Preferred Plan Project to minimize or eliminate any impact to the interconnected electric systems of such other Parties.

7. PAYMENT SCHEDULE

Payments will be made at the completion of individual projects. The Parties shall agree in writing to the method and schedule for the cost share contributions to be made under this MOA.

8. NATIONAL ENVIRONMENTAL POLICY ACT ASSESSMENT

To the extent that BPA's financial contributions under this MOA are determined to trigger the need for analysis of projects under the National Environmental Policy Act, the Parties shall coordinate such assessment.

9. JOINT COMMUNICATIONS

The Parties shall coordinate joint communications regarding presentations of the preferred plan of service to the public.

10. GENERAL PROVISIONS

(a) This MOA, including documents expressly incorporated by reference, constitutes the entire agreement between the Parties. It supersedes all previous communications, representations, or contracts, either written or oral, which purport to describe or embody the subject matter of this MOA.

(b) No amendment of this MOA shall be of any force or effect unless set forth in a written instrument signed by authorized representatives of each Party.

(c) This MOA is made and entered into for the sole benefit of the Parties, and the Parties intend that no other person or entity shall be a direct or indirect beneficiary of this MOA.

(d) This MOA shall be interpreted consistent with and governed by federal law.

(e) In the event that any provision of this MOA is determined to be invalid or unenforceable for any reason, in whole or part, the remaining provisions of this MOA shall be unaffected thereby and shall remain in full force and effect to the fullest extent permitted by law, and such invalid or unenforceable provision shall be replaced by the Parties with a provision that is valid and enforceable and that comes closest to expressing the Parties' intention with respect to such invalid or unenforceable provision.

(f) Each Party shall be solely responsible for and shall pay its own costs and expenses incurred by it in connection with the negotiation of this MOA.

(g) Whenever this MOA requires or provides that (i) a notice be given by a Party to any other Party or (ii) a Party's action requires the approval or consent of any other Party, such notice, consent or approval shall be given in writing and shall be given in accordance with the provisions of Exhibit B to this MOA.

(h) This MOA is binding on any successors and assigns of the Parties. No Party may otherwise transfer or assign this MOA, in whole or in part, without the other Parties' written consent. Such consent shall not be unreasonably withheld.

(i) Nothing contained in this MOA shall be construed as creating a corporation, company, partnership, association, joint venture or other entity, nor shall anything contained in this MOA be construed as

creating or requiring any fiduciary relationship between the Parties. No Party shall be responsible hereunder for the acts or omissions of any other Party. Nothing herein shall preclude (i) a Party from taking any action (or having its affiliates take any action) with respect to any other transmission project, including any such project that may compete with the projects provided herein, or (ii) the Parties jointly from entering into MOAs with third parties for the joint development, construction, ownership or operation of any project or for the provision of transmission capacity from such project.

(j) Other than the obligation to pay amounts due under Section 4, in no event shall any Party be liable to any other Party under any provision of this MOA for any losses, damages, costs or expenses for any direct, special, indirect, incidental, consequential, or punitive damages, including but not limited to loss of profit or revenue, whether based in whole or in part in contract or in tort, including negligence, strict liability, or any other theory of liability; provided, however, that damages for which a Party may be liable to any other Party under another agreement will not be considered to be special, indirect, incidental, or consequential damages hereunder.

(k) The Parties shall not be in breach of their respective obligations to the extent the failure to fulfill any obligation is due to an Uncontrollable Force. "Uncontrollable Force" means an event beyond the reasonable control of, and without the fault or negligence of, the Party claiming the Uncontrollable Force, that prevents that Party from performing its contractual obligations under this MOA and which, by exercise of that party's reasonable care, diligence and foresight, such Party was unable to avoid. Uncontrollable Forces include, but are not limited to:

(1) strikes or work stoppage;

(2) floods, earthquakes, or other natural disasters; terrorist acts; and

(3) final orders or injunctions issued by a court or regulatory body having competent subject matter jurisdiction which the Party claiming the Uncontrollable Force, after diligent efforts, was unable to have stayed, suspended, or set aside pending review by a court of competent subject matter jurisdiction.

Neither the unavailability of funds or financing, nor conditions of national or local economies or markets shall be considered an Uncontrollable Force. The economic hardship of a Party shall not

constitute an Uncontrollable Force. Nothing contained in this provision shall be construed to require any Party to settle any strike or labor dispute in which it may be involved.

If an Uncontrollable Force prevents a Party from performing any of its obligations under this MOA, such party shall: (1) immediately notify the other Parties of such Uncontrollable Force by any means practicable and confirm such notice in writing as soon as reasonably practicable; (2) use its best efforts to mitigate the effects of such Uncontrollable Force, remedy its inability to perform, and resume full performance of its obligation hereunder as soon as reasonably practicable; (3) keep the other Parties apprised of such efforts on an ongoing basis; and (4) provide written notice of the resumption of performance. Written notices sent under this section 10(k) must comply with Exhibit B, Notices and Contact Information.

11. WAIVER

No waiver of any provision or breach of this MOA shall be effective unless such waiver is in writing and signed by the waiving Party, and any such waiver shall not be deemed a waiver of any other provision of this MOA or any other breach of this MOA.

12. SIGNATURE

The Parties have caused this MOA to be executed as of the latest date all Parties have signed this MOA.

CITY OF SEATTLE CITY LIGHT DEPARTMENT		UNITED STATES OF AMERICA Department of Energy Bonneville Power Administration	
By:	Jorge Carrasco	By:	Harder Juj
Name: *(Print/ Type)*	Jorge Carrasco	Name: *(Print/ Type)*	Harder Juj
Title:	Superintendent	Title:	VP, Planning + Asset Mgmt.
Date:	1/31/12	Date:	1/31/12

PUGET SOUND ENERGY, INC.

By: Susan McLain

Name: Susan McLain
(Print/ Type)

Title: Senior Vice President Delivery Operations

Date: 1/31/12

EXHIBIT A
PREFERRED PLAN OF SERVICE

EXHIBIT B
NOTICES

Any notice required under this MOA shall be in writing and shall be delivered in person; or with proof of receipt by a nationally recognized delivery service or by United States Certified Mail. Notices are effective when received. Either Party may change the name or address for receipt of notice by providing notice of such change. The Parties shall deliver notices to the following person and address:

If to Seattle City Light:

Attention:
Phone:
Fax:
Email:

If by First Class Mail:

City of Seattle, City Light Department
(Customer Address)
(Customer City, State, Zip)

If by Overnight Delivery Service:
City of Seattle, City Light Department
(Customer Address)
(Customer City, State, Zip)

If to BPA:

Attention:
Phone:
Fax:
Email:

If by First Class Mail:

Bonneville Power Administration
P.O. Box 61409
Vancouver, WA 98666-1409

If by Overnight Delivery Service:
Bonneville Power Administration – TSE/TPP-2
7500 NE 41st Street – Suite 130
Vancouver, WA 98662

If to the Puget:

Attention:
Phone:
Fax:
Email:

If by First Class Mail:

Puget Sound Energy, Inc.
P.O. Box 97034
Bellevue, WA 98009-9734

If by Overnight Delivery Service:
Puget Sound Energy, Inc.
10885 N.E. 4th Street, Suite 1100
Bellevue, WA 98004-5591

EXHIBIT A
PREFERRED PLAN OF SERVICE

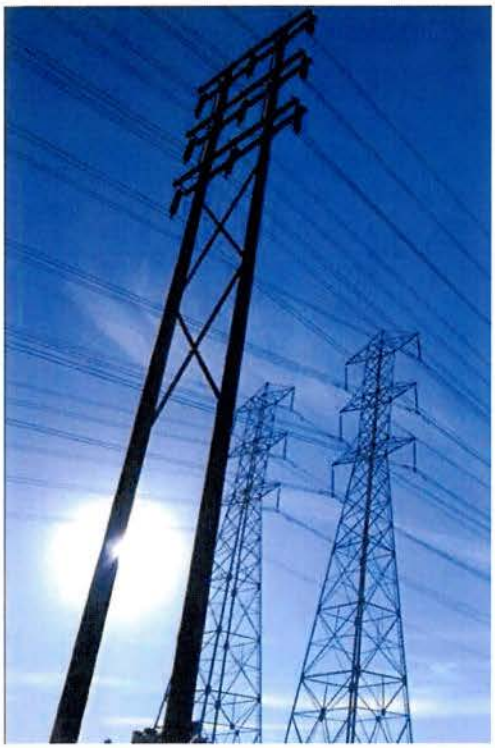

Updated Recommended Transmission Expansion Plan for the Puget Sound Area to Support Winter South-to-North Transfers

ColumbiaGrid

Puget Sound Area Study Team

Bonneville Power Administration, Puget Sound Energy, Seattle City Light, Snohomish County PUD, Tacoma Power, Powerex

Provisional Approval by the Study Team on April 25, 2011

Final Approval by the Study Team on October 28, 2011

Introduction and Conclusions

In October of 2010, the Puget Sound Area Study Team issued a report entitled "Transmission Expansion Plan for the Puget Sound Area." The report is available via the ColumbiaGrid website. The report details a transmission plan for the Puget Sound region that would, as a basic requirement, provides for reliable system performance while significantly improving the ability of the transmission grid to support power transfers between the Northwest and British Columbia. Since the release of the original report, the following changes have occurred that have led to the need for the Puget Sound Area Study Team to revise their transmission plan:

1) ***Additional scenarios*** – The Puget Sound area utilities have been meeting regularly since the publication of the original report in October 2010 and have developed several additional scenarios to be studied (e.g., the addition of a new Broad Street-Massachusetts 115 kV underground cable). In response, the study team repeated their prior analysis for the critical winter south-to-north condition for the new scenarios. The results of this analysis are shown in the table provided in Appendix A.

2) ***Increased likelihood that Puget Sound Energy will move forward with Sammamish-Lakeside-Talbot project*** – Since the development of the original plan, Puget Sound Energy has further developed their plan to rebuild two 115 kV lines to 230 kV (Sammamish-Lakeside-Talbot #1 and #2) and provide new 230/115 kV transformation at their Lakeside Substation. Although both lines will be rebuilt, only one of the lines may be initially energized at 230 kV. As stated in the prior report, this facility addition can delay the need to reconductor the Maple Valley-SnoKing 230 kV lines beyond the ten-year transmission planning horizon.

   The study team decided that since Puget Sound Energy is moving forward with this plan, the Sammamish-Lakeside-Talbot project should be listed as the proposed project in the plan instead of the Maple Valley-SnoKing reconductor. This project will give Puget Sound Energy the ability to provide necessary load support at Lakeside which cannot be achieved with the Maple Valley-SnoKing reconductor project, while providing similar Transmission Curtailment Risk Measure (TCRM) benefits as the Maple Valley-SnoKing reconductor project. A downside of the Sammamish-Lakeside-Talbot project is that its south-to-north Total Transfer Capability (TTC) is lower as compared to the Maple Valley-SnoKing reconductor. However, the Sammamish-Lakeside-Talbot project has additional benefits over the Maple Valley-SnoKing reconductor project in that it provides an additional 230 kV transmission path through the Puget Sound area and makes it feasible to reconductor rather than rebuild the Bothell-SnoKing 230 kV lines.

3) ***Increased likelihood that Seattle City Light will move forward with their North Downtown Substation Project*** – Since the development of the plan, Seattle City Light has indicated that plans to add a new North Downtown Substation have become more likely. The final plan is still being developed by SCL. The option studied includes a new underground cable (North Downtown-Massachusetts 230 kV), a new 115 kV line between North Downtown and Canal, and two 230/115 kV transformers at the proposed substation (see the following Figure One). This project was studied in the prior plan and, as identified previously, a third set of series inductors will be required on the new Canal-North Downtown 115 kV line with the addition of the North Downtown Substation. The plan for the system without, or prior to, the addition of the North Downtown Substation remains the same (adding series inductors on the two 115 kV underground cables). There is not a significant impact on the plan with or without the North Downtown Substation project as long as the project includes a third set of series inductors on the new North Downtown-Canal 115 kV line.

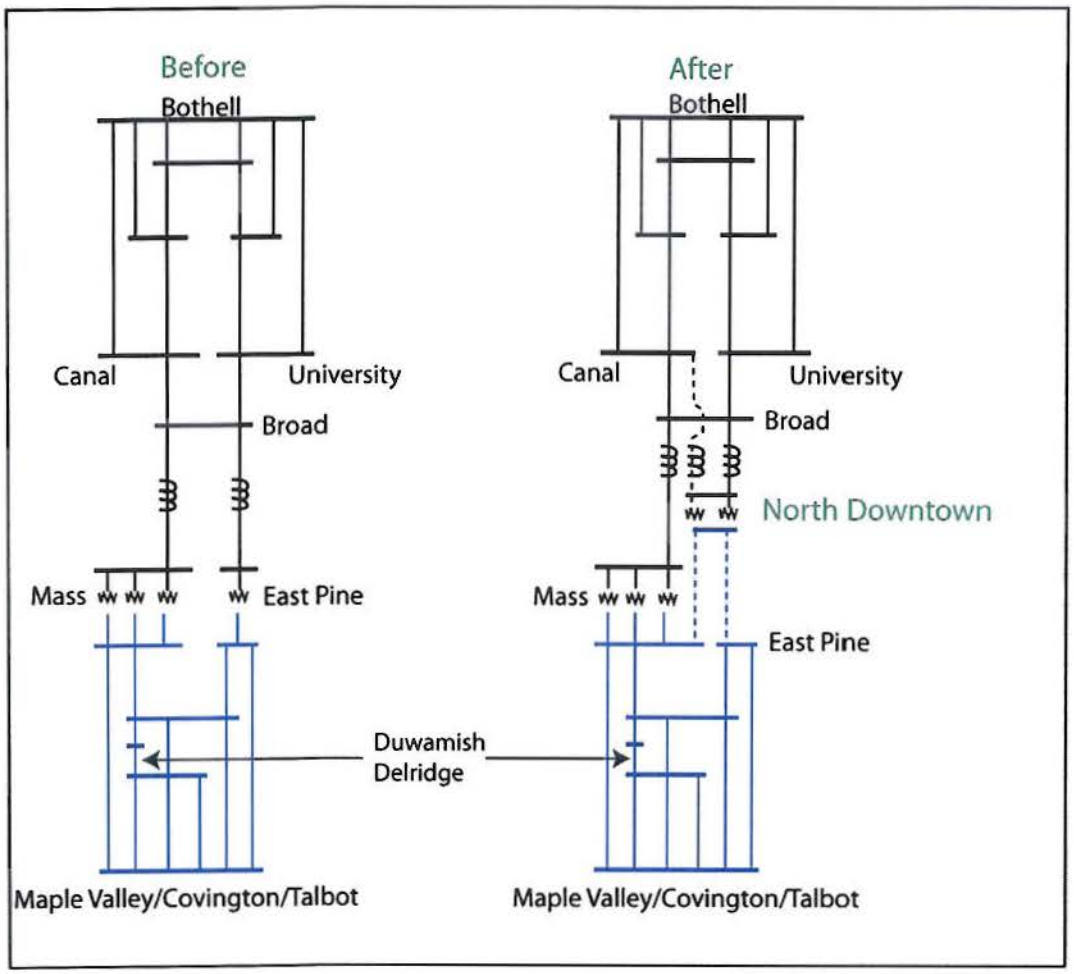

Figure One: One-Line Diagram with the proposed locations of the series inductor additions, before and after the Seattle City Light North Downtown Substation Project.

4) ***Seattle area line rating increases*** – Several key transmission lines in the region have been rerated to a higher capability. In some cases the new ratings provide a 77% increase over the ratings that were utilized in the original study. This has enabled the study team to reduce the size of the series inductors (from 26 ohms to 6 ohms) that were proposed for the Seattle City Light 115 kV transmission lines and cables. The smaller inductors lead to more power flowing through the Seattle City Light system resulting in the need to include an additional facility reconductor in the plan; the Duwamish-Delridge 230 kV line. The cost of this additional reconductor is estimated to be relatively low ($1.6 million). This additional cost is projected to be partially offset by the savings achieved by the installation of smaller inductors. The smaller inductors also reduce the need to add shunt capacitors to offset the reactive losses from the larger sized inductors.

5) ***Seattle City Light Update to TPS Settings*** - Seattle City Light has recently updated the TPS settings which have resulted in operational changes that preclude it from being used as a project in this study to reduce TCRM and increase TTC levels on the northern intertie. All results that use the previous scheme have not been included in this report.

As a result of the above changes, the plan to support south-to-north transfers has been revised as specified in this report. Additional transmission facilities, such as a second Portal Way 230/115 kV transformer, will likely be necessary to support north-to-south transfers. These additional facilities will be further analyzed in subsequent studies.

Overview of Revised Plan

As a result of the above changes, the Transmission Expansion Plan for the Puget Sound Area was revised and the new plan is shown in the following Figure Two:

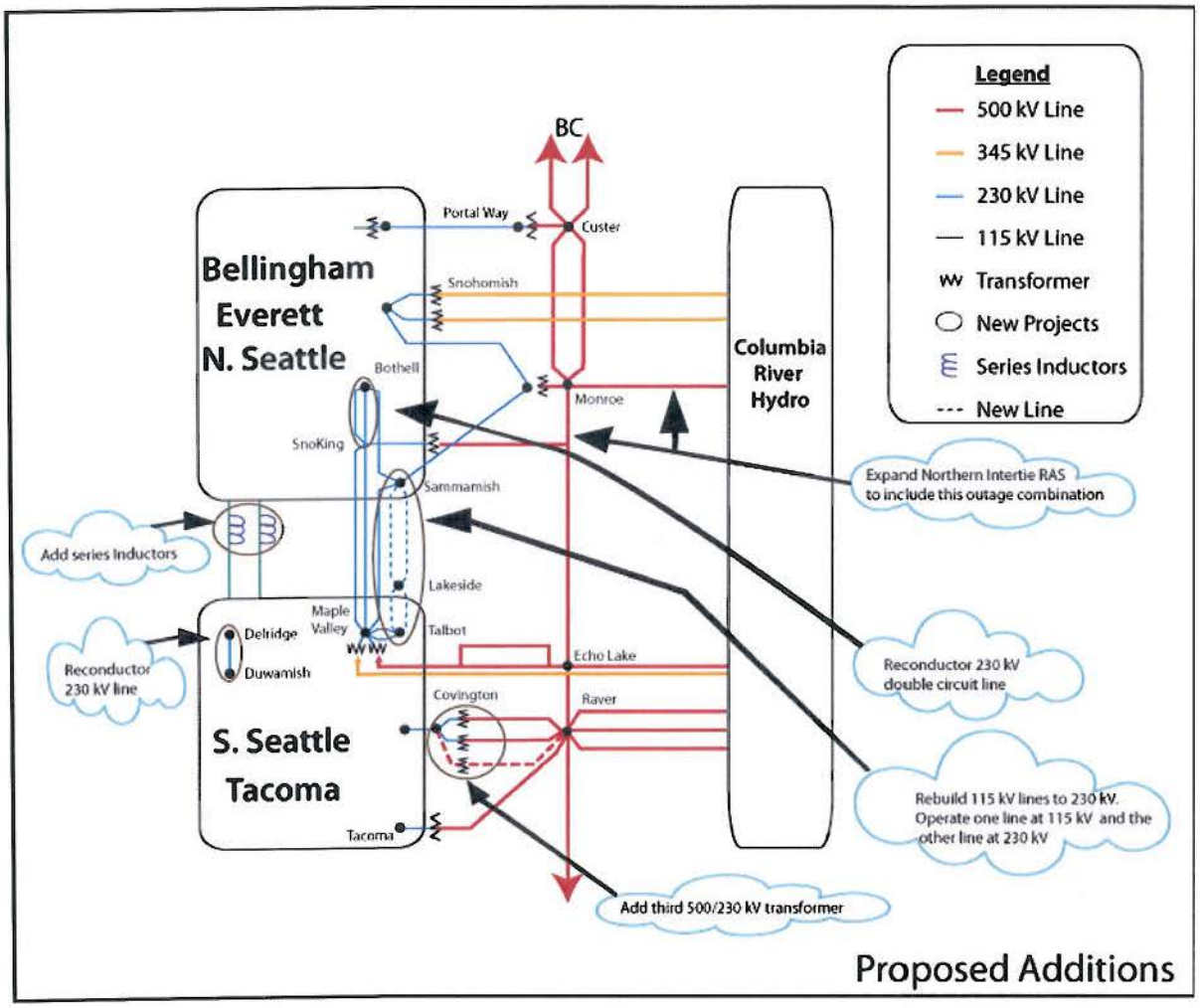

Figure Two: Revised Puget Sound Area Transmission Expansion Plan for Supporting South-to-North Transfers

Projects included in the Puget Sound Area Transmission Expansion Plan to support south-to-north transfers are:

- Reconductor the double circuit Bothell-SnoKing 230 kV lines with high temperature conductor
- Expand the Northern Intertie RAS
- Add a third Covington 500/230 kV transformer
- Reconductor the Delridge-Duwamish 230 kV line
- Add series inductors to the Massachusetts-Union-Broad and East Pine-Broad 115 kV lines in the downtown Seattle system. The final inductor size is under study and may vary from the 6 ohms specified in this report. Each line may have a different inductor size to optimize the system.
- Rebuild both the Sammamish-Lakeside-Talbot 115 kV lines to 230 kV. Energize one line at 230 kV and the other at 115 kV.

The cost estimates for the project in the preferred plan are shown in the following table. It should be noted that portions of the projects may be planned for local utility service and may not be necessary to accomplish the transfer capability goals of this study.

PSAST Preferred South-to-North Plan Cost Estimate	
	Cost Estimate (M)
Reconductor Bothell-SnoKing 230kV #1 & #2 with high temperature conductor	$3
Extend the Northern Intertie RAS to trip for the combined outage of the Chief Joseph-Monroe and Monroe-SnoKing-Echo Lake 500 kV lines	$3
Add a third Covington 500/230 kV transformer, a 500 kV terminal at Raver for the third Raver-Covington 500 kV line, and a 500 kV Bus at Covington	$60
Reconductor Delridge - Duwamish 230 kV Line with high temperature conductor	$2
6 ohm inductors on the two 115 kV cables out of SCL's Broad Street Substation	$13
Lakeside 230/115 kV transformer, rebuild both 115 kV Sammamish – Talbot lines to 230 kV energizing one line at 230 kV	$65
Total Preferred Projects	$146

* The majority of these estimates are preliminary estimates. More detailed estimates will be developed by the Puget Sound Area utilities.

Next Steps

Now that the overall south-to-north plan is complete, the individual transmission owners need to identify the parties responsible for each of the projects and agree on the cost allocation for the projects. After this has been completed, detailed feasibility studies, cost estimates, project timing, and schedules will be completed. In addition, the following project specific studies will be completed by the Puget Sound Area Study Team:

- North-to-South transfer conditions will be studied to determine the effect that the new preferred plan has on transfer capability and to determine if any additional projects are needed.
- Series Inductor Project: Studies need to be completed to determine the proper size for the series inductors, the impact on north-to-south transfers, and the preferred switching arrangement.
- Determine how long the proposed plan will last. The PSAST will grow the Northwest loads in the current 2020 base case to 2025 and 2030 load levels. The additional load will be served by eastern resources. TCRM and TTC values will be calculated to determine whether they may degrade over time.
- Northern Intertie RAS Expansion Project: The Puget Sound Area Study Team will be available to assist BPA and BC Hydro with any additional studies necessary to implement this RAS expansion.
- Covington Transformer Project: Additional studies will be completed by BPA, to further analyze alternative locations for this transformer addition, the need for a 500 kV switchyard at Covington, potential operational solutions, potential remedial action schemes, the size of the transformer, the impedance of the transformer, and the preferred connection to the 230 kV bus. The BPA studies will be coordinated with area utilities through the Puget Sound Area Study Team.

While the projects identified in this report improve the transfer capability through the Puget Sound Area, there remain curtailment risks for firm transfers during outage conditions (N-1-X). Consequently, the Puget Sound Area Study Team will continue to investigate cost effective ways to reduce the risk of firm curtailments.

Study Results

New winter south-to-north studies were completed for a variety of scenarios and the detailed study results are provided in Appendix A. The system performance for each scenario was compared using the following two measures in addition to cost and permitting feasibility:

1) ***Transmission Curtailment Risk Measure (TCRM):*** TCRM is a measure of the likelihood of experiencing curtailments of transfers between the Northwest and British Columbia. The higher the TCRM value the greater the exposure to curtailments. The TCRM analysis

includes the cases with all facilities in service as well as with any single facility out of service. A detailed description of the TCRM methodology is provided in the original report. In the original report, winter and summer conditions for both north-to-south and south-to-north transfers were studied. For this update, only winter conditions with south-to-north transfers were studied as that is the critical system state for the alternatives presented in this report.

2) ***Total Transfer Capability (TTC):*** The TTC (thermal only) of the Westside Northern Intertie (WSNI) was calculated for each of the options in the traditional way, with all lines in service. Only the winter south-to-north condition was studied, with 680 MW of generation operating in the Puget Sound Area. The specific generation unit assumptions are as described in Appendix J of the original report. Puget Sound Area generation during winter peak is between 950 MW and 1550 MW 80% of the time (when load has been greater than 6000MW along with temperature below 32 degrees F). With higher levels of Puget Sound Area generation, the TTC numbers shown in the tables would likely increase.

The major issues addressed in this study are the impacts of the various alternatives on the 115 kV system in the Seattle area, and the impacts of the various alternatives on the 230 kV system between the Maple Valley and SnoKing areas. In all cases, the other major projects as described in the original report are modeled, which include the Northern Intertie RAS expansion, third Covington transformer, and second Portal Way transformer. In addition, the Bothell-SnoKing rebuild project was included in most scenarios although sensitivity studies were conducted for the reconductor option which ended up being the preferred option. Provided below is a discussion of each of the major issues addressed by the study team and their conclusions.

1) 26 ohm versus 6 ohm series inductors

Table 1: Selected TCRM and TTC Results, 26 ohm inductors vs. 6 ohm inductors

Study #	Series Inductors on SCL's 115 kV Cables- 26 ohms	Series Inductors on SCL's 115 kV Cables- 6 ohms	Maple Valley-SnoKing High Temp	PSE's Sammamish - Lakeside - Talbot 115kV to 230kV Upgrade Project (Two Lines Operated at 230 kV)	Total TCRM - Without TCRM Lines Outside of the Puget Sound Area	Winter South North WSNI Thermal TTC at 680 MW Puget Sound Generation
3	X		X		10,304	2,270
4		X	X		8,433	2,297
17	X			X	10,460	1,773
18		X		X	8,666	2,038

With the changes in 115 kV line ratings, the Seattle 115 kV system is capable of accommodating greater flows. As a result, using a series inductor impedance greater than 6 ohms is no longer necessary to reduce the loadings on the Seattle 115 kV system. In fact, the TCRM is slightly better (lower) with the smaller 6 ohm inductors. Prior studies have also indicated that the smaller inductor size provided better results for summer north-to-south conditions. Higher impedance inductors also would have the undesirable effect of pushing more power over to the Maple Valley-SnoKing lines and reducing the TTC. In addition the smaller inductors require the addition of fewer shunt capacitors to offset the reactive losses from the inductors. The 6 ohm inductors have the effect of adding a circuit reactance that is equivalent to 8 miles of overhead 115 kV line. The 6 ohm inductors are now the preferred 115 kV project due to better performance and lower cost.

2) 6 ohm series inductors versus phase shifting transformers

Table 2: 6 ohm series inductors versus phase shifting transformers

Study #	SCL Phase Shifting Transformer	Series Inductors on SCL's 115 kV Cables- 6 ohms	Maple Valley-SnoKing High Temp	PSE's Sammamish - Lakeside - Talbot 115kV to 230kV Upgrade Project (Two Lines Operated at 230 kV)	Total TCRM - Without TCRM Lines Outside of the Puget Sound Area	Winter South North WSNI Thermal TTC at 680 MW Puget Sound Generation
1	X		X		13,122	2,455
4		X	X		8,433	2,297
15	X			X	11,500	2,136
18		X		X	8,666	2,038

The TCRM studies for the phase shifting transformer project may not reflect the true performance of this project due to the difficulty of accurately modeling the phase shifting transformer operating strategy. As a result, while the TCRM studies show poorer performance for the phase shifting transformers than for the series inductor project, the study team believes that this result is a shortcoming of the phase shifter modeling and, in fact, the phase shifters should perform as well or better than the series inductors. This was the conclusion of the TTC studies, where a benefit was observed when using the phase shifting transformers instead of fixed series inductors. However, as the incremental benefits are not believed to be sufficient to justify the higher capital and maintenance costs of the phase shifter option, the 6 ohm series inductors remain the recommended project.

3) 6 ohm series inductors versus adding a third 115 kV cable

Table 3: 6 ohm inductor versus adding a third 115 kV cable

Study #	Series Inductors on SCL's 115 kV Cables- 6 ohms	3rd 115 kV Underground Cable from Mass to Broad Street & Mass Bank 1 Energized	Maple Valley-SnoKing High Temp	PSE's Sammamish - Lakeside - Talbot 115kV to 230kV Upgrade Project (Two Lines Operated at 230 kV)	Total TCRM - Without TCRM Lines Outside of the Puget Sound Area	Winter South North WSNI Thermal TTC at 680 MW Puget Sound Generation
4	X		X		8,433	2,297
5		X	X		19,027	1,513
18	X			X	8,666	2,038
19		X		X	11,213	2,297

This option examines adding a third Seattle City Light 115 kV underground cable (a second cable from Broad Street to Massachusetts) in place of the 6 ohm inductors. The results for this alternative vary depending on whether the Sammamish-Lakeside-Talbot lines are upgraded to 230 kV or the Maple Valley-SnoKing lines are reconductored. With the preferred plan (upgrading the Sammamish-Lakeside-Talbot lines to 230 kV), there is a benefit to the alternative of adding a third cable from a TTC perspective and a slight benefit to the series inductor option from the TCRM perspective. Conversely, if the Maple Valley-SnoKing reconductor project moves forward, the series inductor option performs better from both a TCRM and TTC perspective. This is because if a third cable is added, there is still a need for the series inductors to eliminate overloading on the Broad Street-East Pine 115 kV cable, the East Pine-Maple Valley 230 kV line, and the Massachusetts 230/115 kV transformers. The third cable option is deemed to be less preferable to the recommended option primarily because the cost of the third cable is expected to far exceed the cost of the series inductors. In addition, the construction of an additional Broad-Massachusetts 115 kV cable is incompatible with Seattle City Light's future plan to add a new 230 kV cable as part of their North Downtown Substation

Project (North Downtown-Massachusetts 230 kV). The 6 ohm series inductors remain the preferred project due to better performance and lower cost.

4) ***6 Ohm Series inductors versus replacing cables***

Table 4: 6 ohm inductors versus replacing cables

Study #	Series Inductors on SCL's 115 kV Cables- 6 ohms	Replace SCL's Existing 115 kV Cables (no inductors)	Maple Valley-SnoKing High Temp	PSE's Sammamish - Lakeside - Talbot 115kV to 230kV Upgrade Project (Two Lines Operated at 230 kV)	Total TCRM - Without TCRM Lines Outside of the Puget Sound Area	Winter South North WSNI Thermal TTC at 680 MW Puget Sound Generation
4	X		X		8,433	2,297
6		X	X		19,398	1,602
18	X			X	8,666	2,038
20		X		X	11,746	2,210

If the 6 ohm inductors are in place, potential overloading on the cables is no longer an issue so rebuilding the cables would have no benefit. This option examines rebuilding the cables in lieu of the 6 ohm inductors. The results for this alternative vary depending on whether the Sammamish-Lakeside-Talbot lines are upgraded to 230 kV or the Maple Valley-SnoKing lines are reconductored. With the preferred plan (upgrading the Sammamish-Lakeside-Talbot lines to 230 kV), the series inductors perform better from a TCRM perspective and slightly worse from a TTC perspective. If the Maple Valley-SnoKing reconductor project moves forward then the series inductor option performs better from both a TCRM and TTC perspective. The TCRM performance is better for the series inductor options because if the cables are replaced, there would be other limits reached on the downtown Seattle system. The additional limits reached that account for most of the TCRM increase include the East Pine 230/115 kV transformer and the Massachusetts 230/115 kV transformers. The series inductors remain the preferred project due to better performance and lower cost.

5) 6 ohm *series inductors versus the Seattle City Light North Downtown Substation project with and without series inductors*

Table 5: 6 ohm inductors versus the Seattle City Light North Downtown Substation project with and without series inductors

Study #	Series Inductors on SCL's 115 kV Cables- 6 ohms	SCL's North Downtown Substation	SCL's North Downtown Substation (6 ohm inductors)	Maple Valley-SnoKing High Temp	PSE's Sammamish - Lakeside - Talbot 115kV to 230kV Upgrade Project (Two Lines Operated at 230 kV)	Total TCRM - Without TCRM Lines Outside of the Puget Sound Area	Winter South North WSNI Thermal TTC at 680 MW Puget Sound Generation
4	X			X		8,433	2,297
32		X		X		117,049	-1,380
36			X	X		8,778	2,672
18	X				X	8,666	2,038
34		X			X	38,594	-832
38			X		X	9,101	2,207

The study results indicate that the TCRM would increase dramatically and the TTC would be negative (not capable of south-to-north transfers) unless the series inductors are included in the plans for the new North Downtown Substation. The majority of this increase is due to overloading on the Broad-North Downtown 115 kV cable. As a result, the series inductors are needed before and after the addition of the North Downtown Substation Project.

6) **6 ohm series inductors:** ***Reinforcing Maple Valley–SnoKing 230 kV lines versus options to upgrade Sammamish-Lakeside-Talbot 115 kV lines versus Monroe-Echo Lake #2***

Table 6: 6 ohm inductors – Reinforcing Maple Valley–SnoKing 230 kV lines versus options to upgrade Sammamish-Lakeside-Talbot 115 kV lines versus Monroe-Echo Lake #2

Study #	Series Inductors on SCL's 115 kV Cables- 6 ohms	Maple Valley-SnoKing High Temp	Maple Valley-SnoKing Rebuild	PSE's Sammamish - Lakeside - Talbot 115kV to 230kV Upgrade Project (Two Lines Operated at 230 kV)	PSE's Sammamish - Lakeside - Talbot 115kV to 230kV Upgrade Project (One Line Operated at 230 kV)	Monroe-Echo Lake #2 500kV	Total TCRM - Without TCRM Lines Outside of the Puget Sound Area	Winter South North WSNI Thermal TTC at 680 MW Puget Sound Generation
4	X	X					8,433	2,297
11	X		X				7,623	2,632
18	X			X			8,666	2,038
28	X	X		X			9,003	2,700
81	X				X		13,422	1,643
80	X					X	5,047	2,875

The lowest TCRM and the highest TTC for line improvements east of Lake Washington can be achieved by building the Monroe-Echo Lake #2 500 kV line in addition to the 6 ohm series inductors. Unfortunately, this is also the highest cost transmission option.

From a TCRM perspective there is little difference between the Maple Valley – SnoKing reinforcement options and the Sammamish – Lakeside – Talbot upgrade project with two lines operated at 230 kV although the Maple Valley-SnoKing rebuild option performs slightly better than the others. From a TTC perspective, there is an advantage for the Maple Valley-SnoKing options; particularly the rebuild option. However, this was not deemed to be a sufficient advantage over the preferred Sammamish-Lakeside-Talbot 230 kV upgrade project with two lines operated at 230 kV. A major benefit of the Sammamish-Lakeside-Talbot options is that

they would provide necessary load service to Lakeside Substation which the Maple Valley-SnoKing options would not. Pursuing the Sammamish-Lakeside-Talbot options at this time does not preclude reconductoring the Maple Valley-SnoKing lines at a later time.

The Sammamish – Lakeside – Talbot upgrade project can defer some of its substation construction costs by initially upgrading the 115 kV lines to 230 kV and operating one line at 115 kV and one line at 230 kV. This option did not perform as well as operating both lines at 230 kV for both TCRM and TTC. The reduction in performance has been deemed acceptable for the cost savings. The second line planned to be cut-over to 230 kV operation at a later date.

7) **6 ohm series inductors and Sammamish-Lakeside-Talbot upgrade:** ***Bothell-SnoKing rebuild versus reconductor***

Table 7: 6 ohm series inductors and Sammamish-Lakeside-Talbot upgrade: Bothell-SnoKing rebuild versus reconductor

Study #	Series Inductors on SCL's 115 kV Cables- 6 ohms	PSE's Sammamish - Lakeside - Talbot 115kV to 230kV Upgrade Project (Two Lines Operated at 230 kV)	PSE's Sammamish - Lakeside - Talbot 115kV to 230kV Upgrade Project (One Line Operated at 230 kV)	Bothell - SnoKing Rebuild	Bothell - SnoKing High Temp Instead of Rebuild	Total TCRM - Without TCRM Lines Outside of the Puget Sound Area	Winter South North WSNI Thermal TTC at 680 MW Puget Sound Generation
18	X	X		X		8,666	2,038
47	X	X			X	9,512	2,086
81	X		X	X		13,422	1,643
82	X		X		X	13,663	1,677

For either Sammamish – Lakeside – Talbot upgrade option the TCRM and TTC results are similar for the Bothell-SnoKing rebuild and reconductoring options. The reconductor of the Bothell-SnoKing lines would provide acceptable performance at a lower cost with minimal permitting and mitigation requirements.

Appendix A

Table of TCRM and TTC Results

ColumbiaGrid PSAST Options for N-1-X TCRM Determination

	115 kV Reinforcement Options									230 kV & 500 kV Reinforcement Options							TCRM & TTC Values		
Study #	SCL Phase Shifting Transformer	Series Inductors on SCL's 115 kV Cables- 26 ohms	Series Inductors on SCL's 115 kV Cables- 6 ohms	3rd 115 kV Underground Cable from Mass to Broad Street & Mass Bank 1 Energized	Replace SCL's Existing 115 kV Cables (no inductors)	Replace SCL's Existing 115 kV Cables (6 ohm inductors)	SCL's North Downtown Substation	SCL's North Downtown Substation (6 ohm inductors)	Maple Valley-SnoKing High Temp	Maple Valley-SnoKing Rebuild	PSE's Sammamish - Lakeside - Talbot 115kV to 230kV Upgrade Project (Two Lines Operated at 230 kV)	PSE's Sammamish - Lakeside - Talbot 115kV to 230kV Upgrade Project (One Line Operated at 230 kV)	Monroe-Echo Lake #2 500kV	Bothell - SnoKing High Temp Instead of Rebuild	With Covington, Portalway, Extended RAS, Bothell - SnoKing Upgrade	Total TCRM - Without TCRM Lines Outside of the Puget Sound Area	TTC (Thermal Only)	Notes
54																308,343	-	PSAST 2020 Winter South-to-North Expansion Plan Base Case
24															X	73,898	920	
1	X								X						X	13,122	2455	
3		X							X						X	10,304	2270	
4			X						X						X	8,433	2297	
5				X					X						X	19,027	1513	
6					X				X						X	19,398	1602	
7						X			X						X	8,258	2448	
32							X		X						X	117,049	-1380	
36								X	X						X	8,778	2672	
8	X									X					X	14,039	2692	
10		X								X					X	12,659	2652	
11			X							X					X	7,623	2632	
12				X						X					X	13,172	1820	
13					X					X					X	13,012	2120	
14						X				X					X	7,423	2664	
33							X			X					X	82,697	-1350	
37								X		X					X	7,111	2708	
15	X										X				X	11,500	2136	
17		X									X				X	10,460	1773	
18			X								X				X	8,666	2038	
81			X									X			X	13,422	1643	
47			X								X			X	X	9,512	2086	
82			X									X		X	X	13,663	1677	Preferred Plan
19				X							X				X	11,213	2297	
20					X						X				X	11,746	2210	
21						X					X				X	8,666	2044	
34							X				X				X	38,594	-832	
38								X			X				X	9,101	2207	
49								X			X			X	X	10,286	2233	
25	X								X		X				X	9,664	2745	
27		X							X		X				X	9,288	2497	
28			X						X		X				X	9,003	2700	
29				X					X		X				X	11,460	2305	
30					X				X		X				X	12,395	2377	
31						X			X		X				X	9,003	2700	
35							X		X		X				X	38,463	-804	
39								X	X		X				X	9,296	2732	
56								X	X		X			X	X	10,285	2753	
22													X		X	13,501	2104	
40							X						X		X	46,466	-292	
41								X					X		X	4,143	2916	
80			X										X		X	5,047	2875	

EXHIBIT B
NOTICES

Any notice required under this MOA shall be in writing and shall be delivered in person; or with proof of receipt by a nationally recognized delivery service or by United States Certified Mail. Notices are effective when received. Either Party may change the name or address for receipt of notice by providing notice of such change. The Parties shall deliver notices to the following person and address:

If to Seattle City Light:

Attention:
Phone:
Fax:
Email:

If by First Class Mail:

City of Seattle, City Light Department
(Customer Address)
(Customer City, State, Zip)

If by Overnight Delivery Service:
City of Seattle, City Light Department
(Customer Address)
(Customer City, State, Zip)

If to BPA:

Attention:
Phone:
Fax:
Email:

If by First Class Mail:

Bonneville Power Administration
P.O. Box 61409
Vancouver, WA 98666-1409

If by Overnight Delivery Service:
Bonneville Power Administration – TSE/TPP-2
7500 NE 41st Street – Suite 130
Vancouver, WA 98662

If to the Puget:

Attention:
Phone:
Fax:
Email:

If by First Class Mail:

Puget Sound Energy, Inc.
P.O. Box 97034
Bellevue, WA 98009-9734

If by Overnight Delivery Service:
Puget Sound Energy, Inc.
10885 N.E. 4th Street, Suite 1100
Bellevue, WA 98004-5591

Department of Energy

Bonneville Power Administration
P.O. Box 61409
Vancouver, WA 98666-1409

TRANSMISSION SERVICES

July 22, 2014

In reply refer to: TSE/TPP-2

Contract No. 14TX-16053
Letter Agreement

Ms. Booga Gilbertson
Vice President, Operations Services
Puget Sound Energy, Inc.
10885 NE 4th Street, PSE – 11S
Bellevue, WA 98004

Mr. Phillip West
Customer Service Energy Officer
City of Seattle, City Light Department
700 Fifth Avenue, Suite 2822
Seattle, WA 98104-5031

Dear Ms. Gilbertson and Mr. West:

The Bonneville Power Administration (BPA), Puget Sound Energy, Inc, (PSE) and City of Seattle, City Light Department (SCL) are parties to the Memorandum of Agreement (MOA), Contract No. 11TX-15450, relating to the Preferred Puget Sound Area Plan of Service Projects and Cost Allocation. The parties to the MOA are currently in the initial stages of development of the projects described in the MOA. As this has progressed, certain aspects of the MOA were identified that the parties believe need to be clarified.

This Agreement is intended to clarify the scope changes related to the Covington 500 kV Transformer Addition Project described in Section 3(a) of the MOA and the Bothell to SnoKing Reconductor Project described in Section 3(c) of the MOA.

BPA's transformer addition originally planned for Covington Substation has been moved to Raver Substation. There is no change in financial responsibility under the MOA due to this relocation.

The Bothell to SnoKing Reconductor Project was identified in the MOA as an SCL project. However, during subsequent discussions it was discovered that BPA owns the first ½ mile of these lines on the SnoKing end. BPA will rebuild its owned portion of these lines at its cost, including any necessary replacement of equipment within SnoKing Substation associated with these lines.

In order to meet the project schedule, please sign all originals of this Agreement, retain one original for your records and return the remaining two originals to my attention at one of the following addresses at your earliest convenience, but not later than Close of Business on August 30, 2014:

First Class Mail	Overnight Delivery Service
Bonneville Power Administration Mail Stop: TSE/TPP-2 P.O. Box 61409 Vancouver, WA 98666-1409	Bonneville Power Administration Mail Stop: TSE/TPP-2 7500 NE 41st Street – Suite 130 Vancouver, WA 98662

BPA will ensure that Puget and SCL have a full set of original signature pages.

If you have any questions, please call me at (360) 619-6015.

Sincerely,

Toni L. Timberman
Senior Transmission Account Executive
Transmission Sales

CONCUR:

PUGET SOUND ENERGY, INC.

By: _____

Name: _____
(Print/Type)

Title: _____

Date: _____

CITY OF SEATTLE,
CITY LIGHT DEPARTMENT

By: _____

Name: _____
(Print/Type)

Title: _____

Date: _____

bcc:
C. Olsen– KSC-TPP-1
B. Bennett – LT-7
J. Weiss – TPCV/COVINGTON
T. Timberman – TSE/TPP-2
P. Gibson – TSES/TPP-2
Customer File – TS/-TPP-2 (TM-11, Puget Sound Energy, Inc.)
Customer File – TSE/TPP-2 (TM-11, City of Seattle, City Light Department.)
Official File – CCM Support

(W:\CT\Puget Sound Energy, Inc\Drafts\16053_PSE-SCL-PSANI MOA SCOPE CHANGE LTR AGMT.Doc)

Department of Energy

Bonneville Power Administration
P.O. Box 61409
Vancouver, WA 98666-1409

TRANSMISSION SERVICES

August XX, 2014

In reply refer to: TSE/TPP-2

Contract No. 14TX-16054
Letter Agreement

Ms. Booga Gilbertson, Vice President,
Operations Services
Puget Sound Energy, Inc.
10885 NE 4th Street, PSE – 11S
Bellevue, WA 98004

Dear Ms. Gilbertson:

The Bonneville Power Administration (BPA), Puget Sound Energy, Inc, (PSE) and City of Seattle, City Light Department (SCL) are parties to the Memorandum of Agreement (MOA), Contract No. 11TX-15450, relating to the Preferred Puget Sound Area Plan of Service Projects and Cost Allocation. The parties to the MOA are currently in the initial stages of development of the projects described in the MOA. As this has progressed, certain aspects of the MOA were identified that the parties believe need to be clarified.

This Agreement is intended to clarify the use of BPA funds contributed toward the adjusted projected capital cost of the Puget Preferred Plan Projects described in Sections 4(c) and 5(a) of the MOA.

The parties acknowledge that BPA is not involved in any manner or capacity in PSE's Sammamish to Lakeside to Talbot Rebuild Project and agree that no BPA funds provided under the MOA will be allocated to PSE's Sammamish to Lakeside to Talbot Rebuild Project. Instead, all BPA funds under the MOA will be allocated to PSE's Lakeside 230 kV Transformer Addition Project as well as the other BPA and SCL Preferred Plan Projects identified in the MOA.

In order to meet the project schedule, please sign both originals of this Agreement, retain one original for your records and return the remaining original to my attention at one of the following addresses at your earliest convenience, but not later than Close of Business on
August 30, 2014:

<u>First Class Mail</u>

Bonneville Power Administration
Mail Stop: TSE/TPP-2
P.O. Box 61409
Vancouver, WA 98666-1409

<u>Overnight Delivery Service</u>

Bonneville Power Administration
Mail Stop: TSE/TPP-2
7500 NE 41st Street – Suite 130
Vancouver, WA 98662

If you have any questions, please call me at (360) 619-6015.

Sincerely,

Toni L. Timberman
Senior Transmission Account Executive
Transmission Sales

CONCUR:

PUGET SOUND ENERGY, INC.

By: _____

Name: _____
(Print/Type)

Title: _____

Date: _____

bcc:

C. Olsen– KSC-TPP-1
B. Bennett – LT-7
J. Weiss – TPCV/COVINGTON
T. Timberman – TSE/TPP-2
P. Gibson – TSES/TPP-2
Customer File – TS/-TPP-2 (TM-11, Puget Sound Energy, Inc.)
Customer File – TSE/TPP-2 (TM-11, City of Seattle, City Light Department.)
Official File – CCM Support

(W:\CT\Puget Sound Energy, Inc\Drafts\16054_PSE_USE OF FUNDS.Doc)

Department of Energy

Bonneville Power Administration
P.O. Box 61409
Vancouver, WA 98666-1409

TRANSMISSION SERVICES

August XX, 2014

In reply refer to: TSE/TPP-2

Contract No. 14TX-16060
Letter Agreement

Ms. Booga Gilbertson
Vice President Operations Services
Puget Sound Energy, Inc.
P.O. Box 90868
Bellevue, WA 98009-0868

Mr. Phillip West
Customer Service Energy Officer
City of Seattle, City Light Department
700 Fifth Ave., Suite 2822
Seattle, WA 98104-5031

Dear Ms. Gilbertson and Mr. West:

The Bonneville Power Administration (BPA), Puget Sound Energy, Inc., (PSE) and City of Seattle, City Light Department (SCL) are parties to the Memorandum of Agreement (MOA), Contract No. 11TX-15450, relating to the Preferred Puget Sound Area Plan of Service Projects and Cost Allocation. The parties to the MOA are currently in the initial stages of development of the projects described in the MOA. As this has progressed, certain aspects of the MOA were identified that the parties believe need to be clarified.

This Agreement is intended to clarify BPA's obligations under the National Environmental Policy Act (NEPA) for its role in the MOA, as described in Section 8 of the MOA, as well as the nature of the Preferred Plan Projects described in the MOA for the purposes of NEPA.

With respect to environmental compliance BPA, as a Federal agency, has certain obligations and responsibilities under NEPA and other federal laws (collectively the NEPA review process) that it must fulfill before it can make a final decision concerning whether to participate in implementation of certain of the Preferred Plan Projects described in Section 3 of the MOA and the capital cost allocation described in Sections 4 and 5 of the MOA. Nothing in the MOA shall be construed as obligating or committing BPA to make a final decision concerning any of the Preferred Plan Projects and capital cost allocation before completing the NEPA review process. In addition, BPA reserves the right to determine the appropriate NEPA and other environmental compliance strategies for its actions under the MOA, and to choose any alternatives considered in the NEPA process, including the no-action alternative.

Furthermore, the parties acknowledge and agree that while the MOA identifies a number of Preferred Plan Projects to be undertaken by the parties, each of these projects could proceed independently from the others and that no single project is contingent or dependent upon another in the goal of relieving transmission congestion in the Puget Sound Area. As such, BPA, SCL, and PSE may elect to conduct separate environmental reviews for each project identified in the MOA.

In order to meet the project schedule, please sign all originals of this Agreement, retain one original for your records and return the remaining two originals to my attention at one of the following addresses at your earliest convenience, but not later than Close of Business on August x, 2014:

Formatted: Font: 11 pt

Formatted: Font: 11 pt

First Class Mail	Overnight Delivery Service
Bonneville Power Administration	Bonneville Power Administration
Mail Stop: TSE/TPP-2	Mail Stop: TSE/TPP-2
P.O. Box 61409	7500 NE 41st Street – Suite 130
Vancouver, WA 98666-1409	Vancouver, WA 98662

BPA will ensure that Puget and SCL have a full set of original signature pages.

Please do not hesitate to contact Justin Moffett at (503) 230-3233 or me at (360) 619-6015 if you would like to discuss this information.

Sincerely,

Toni L. Timberman
Senior Transmission Account Executive
Transmission Sales

CONCUR:

Formatted: Font: Times New Roman

PUGET SOUND ENERGY, INC.

By: _____

Name: _____
(Print/Type)

Title: _____

Date: _____

CITY OF SEATTLE,
CITY LIGHT DEPARTMENT

By: _____

Name: _____
(Print/Type)

Title: _____

Date: _____

Department of Energy

Bonneville Power Administration
P.O. Box 61409
Vancouver, WA 98666-1409

TRANSMISSION SERVICES

August X, 2014

In reply refer to: TSE/TPP-2

Contract No. 14TX-16062
Letter Agreement

Ms. Booga Gilbertson
Vice President, Operations Services
Puget Sound Energy, Inc.
10885 NE 4th Street, PSE – 11S
Bellevue, WA 98004

Mr. Phillip West
Customer Service Energy Officer
City of Seattle, City Light Department
700 Fifth Avenue, Suite 3200
Seattle, WA 98104-5031

Dear Ms. Gilbertson and Mr. West:

The Bonneville Power Administration (BPA), the City of Seattle, City Light Department (Seattle City Light) and Puget Sound Energy, Inc. (Puget) are parties to the Memorandum of Agreement (MOA), Contract No. 11TX-15450, relating to the Preferred Puget Sound Area Plan of Service Projects and Cost Allocation. The parties to the MOA are currently in the initial stages of development of the projects described in the MOA. As this has progressed certain aspects of the MOA were identified that the parties believe need to be clarified.

The purpose of this Letter Agreement is to meet the requirement in Section 7, Payment Schedule, of the MOA, which states that "The Parties shall agree in writing to the method and schedule for the cost share contributions to be made under this MOA." BPA, Puget and Seattle City Light agree that waiting until the completion of a project before exchanging funds (as specified in Section 7) is not the preferred course of action, given the potential for multiple year delays for completion of a project. An alternative arrangement is described below.

BPA, Puget and Seattle City Light hereby agree to the following billing provisions:

1. Each party's cost obligation for performance of the duties associated with construction of each Preferred Plan Project shall be as specified in Sections 4 and 5 of the MOA. The cost of performing such duties shall be the actual cost of doing the work plus overheads (do we need to specify the rates that will be charged by Puget and Seattle City Light?).

2. Seattle City Light Preferred Plan Projects

   (a) Seattle City Light shall submit invoices to BPA and Puget on a quarterly basis for BPA and Puget cost obligations associated with construction of the Seattle City Light Preferred Plan Projects. Invoices shall include supporting documentation showing cost detail. BPA and Puget shall remit payment within 30 days following receipt of the invoices.

   (b) Seattle City Light shall notify BPA and Puget immediately if, at any time during the course of the project, Seattle City Light expects BPA or Puget costs to exceed the funding obligation described in Section 4 (b) of the MOA. If BPA and Puget agree to

the cost increase, a modification to this agreement will be prepared to provide for the additional funding amount.

3. Puget Preferred Plan Projects

(a) Puget shall submit invoices to BPA and Seattle City Light on a quarterly basis for BPA and Seattle City Light cost obligations associated with construction of the Puget Preferred Plan Projects. Invoices shall include supporting documentation showing cost detail. BPA and Seattle City Light shall remit payment within 30 days following receipt of the invoices.

(b) Puget shall notify BPA and Seattle City Light immediately if, at any time during the course of the project, Puget expects BPA or Seattle City Light costs to exceed the funding obligation described in Section 4 (c) of the MOA. If BPA and Seattle City Light agree to the cost increase, a modification to this agreement will be prepared to provide for the additional funding amount.

4. Billing Addresses

Bonneville Power Administration
ATTN:
P.O. Box 61409
Vancouver, WA 98666-1409

Puget Sound Energy
ATTN:
Address
City/State/Zip

Seattle City Light
ATTN:
Address
City/State/Zip

Please sign all originals of this agreement, retain one original for your records and return the remaining originals to my attention at one of the following addresses at your earliest convenience, but not later than Close of Business on September xx, 2014:

First Class Mail	Overnight Delivery Service
Bonneville Power Administration Mail Stop: TSE/TPP-2 P.O. Box 61409 Vancouver, WA 98666-1409	Bonneville Power Administration Mail Stop: TSE/TPP-2 7500 NE 41st Street – Suite 130 Vancouver, WA 98662

BPA will ensure that Puget and Seattle City Light have a full set of original signature pages.

If you have any questions, please call me at (360) 619-6015.

Sincerely,

DRAFT

Toni L. Timberman
Senior Transmission Account Executive
Transmission Sales

CONCUR:

PUGET SOUND ENERGY, INC.

By: _____

Name: _____
(Print/Type)

Title: _____

Date: _____

CITY OF SEATTLE,
CITY LIGHT DEPARTMENT

By: _____

Name: _____
(Print/Type)

Title: _____

Date: _____

DRAFT

bcc:
C. Olsen– KSC-TPP-1
B. Bennett – LT-7
J. Weiss – TPCV/COVINGTON
T. Timberman – TSE/TPP-2
P. Gibson – TSES/TPP-2
Customer File – TS/-TPP-2 (TM-11, Puget Sound Energy, Inc.)
Customer File – TSE/TPP-2 (TM-11, City of Seattle, City Light Department.)
Official File – CCM Support

(W:\CT\Puget Sound Energy, Inc\Drafts\16062 PSANI MOA Financial Terms And Conditions.Doc)

DRAFT

From: Timberman,Toni L (BPA) - TSE-TPP-2
To: Jusupovic,Jana D (BPA) - TPC-TPP-4
Subject: RE: Conf call for PSANI MOA Letter Agreements
Date: Tuesday, September 30, 2014 4:49:00 PM

I knew that…peeked at your calendar when I was choosing the days to be sure it worked for us before asking the customers.

How is George? I left Gizzard at day care all day last Thursday, and some other dog must have eaten his breakfast because when he finally woke up from his nap at home he ate at least three times his normal dinner! Hungry puppy! He had his grooming today so he is all pretty and smells nice. I figured I needed to get him looking presentable before the paella party.

From: Jusupovic,Jana D (BPA) - TPC-TPP-4
Sent: Tuesday, September 30, 2014 4:45 PM
To: Timberman,Toni L (BPA) - TSE-TPP-2
Subject: RE: Conf call for PSANI MOA Letter Agreements

Glad you're scheduling this! I am free all three days ☺

From: Timberman,Toni L (BPA) - TSE-TPP-2
Sent: Tuesday, September 30, 2014 11:13 AM
To: Jusupovic,Jana D (BPA) - TPC-TPP-4; 'Uzma Siddiqi (uzma.siddiqi@seattle.gov)'; 'john.phillips@pse.com'
Subject: Conf call for PSANI MOA Letter Agreements

I would like to schedule a conference call to discuss the draft PSANI MOA Letter Agreements.

Please let me know your first and second choices from the following options:

- Friday October 3 anytime between 1:00 and 4:00;
- Tuesday October 14 – anytime (suggest what works best for you)
- Thursday October 16 9:30-10:30 or 1:00-2:00

I have attached the draft agreements for your reference, along with the one for the financial which had not been previously sent.

Thanks,
Toni
Toni L. Timberman
Senior Transmission Account Executive
Bonneville Power Administration
(360) 619-6015 office
(b) (6) [redacted]
tltimberman@bpa.gov

From: Timberman,Toni L (BPA) - TSE-TPP-2
To: Caines,Sandra L (CONTR) - TSE-TPP-2
Subject: FW: Conf call for PSANI MOA Letter Agreements
Date: Tuesday, September 30, 2014 4:59:00 PM

Sandy, could you please set up a phone bridge for 9:00-10:00 on Tuesday Oct 14? Please send the info to Uzma so she can update the meeting invite. 4 ports…
Thank you!
Toni

From: Siddiqi, Uzma [mailto:Uzma.Siddiqi@seattle.gov]
Sent: Tuesday, September 30, 2014 4:52 PM
To: Phillips, John M - Transmission; Timberman,Toni L (BPA) - TSE-TPP-2; Jusupovic,Jana D (BPA) - TPC-TPP-4
Subject: RE: Conf call for PSANI MOA Letter Agreements

Based on the three calendars, I would suggest –Tuesday, October 14 – before 11am.
(And I'll go ahead and send a meeting invitation to hold the time ☺)
Uzma

From: Phillips, John M - Transmission [mailto:john.phillips@pse.com]
Sent: Tuesday, September 30, 2014 4:47 PM
To: Timberman,Toni L (BPA) - TSE-TPP-2; Jusupovic,Jana D (BPA) - TPC-TPP-4; Siddiqi, Uzma
Subject: RE: Conf call for PSANI MOA Letter Agreements

I am also available any time on the 14th. 10/16 1-2 would be next best though I would need to do some rescheduling.

John Phillips
Manager of Transmission Contracts
Electric Transmission
Location: 355 110 Ave NE, Bellevue WA
Phone: (425) 462-3579

From: Timberman,Toni L (BPA) - TSE-TPP-2 [mailto:tltimberman@bpa.gov]
Sent: Tuesday, September 30, 2014 11:13 AM
To: Jusupovic,Jana D (BPA) - TPC-TPP-4; 'Uzma Siddiqi (uzma.siddiqi@seattle.gov)'; Phillips, John M - Transmission
Subject: Conf call for PSANI MOA Letter Agreements

I would like to schedule a conference call to discuss the draft PSANI MOA Letter Agreements.

Please let me know your first and second choices from the following options:

- Friday October 3 anytime between 1:00 and 4:00;
- Tuesday October 14 – anytime (suggest what works best for you)
- Thursday October 16 9:30-10:30 or 1:00-2:00

I have attached the draft agreements for your reference, along with the one for the financial which had not been previously sent.

Thanks,
Toni

Toni L. Timberman
Senior Transmission Account Executive
Bonneville Power Administration
(360) 619-6015 office
(b) (6) [redacted]
tltimberman@bpa.gov

From:	Siddiqi, Uzma
To:	Phillips, John M - Transmission; Timberman,Toni L (BPA) - TSE-TPP-2; Jusupovic,Jana D (BPA) - TPC-TPP-4
Cc:	Tran, Tuan
Subject:	RE: PSANI Letter Agreements
Date:	Friday, October 10, 2014 4:18:46 PM
Attachments:	16062 PSANI MOA Financial Terms and Conditions-SCL Comments V2 092514.doc 16060 PSANI MOA NEPA LTR AGMT 8 8 TT-SCL Comments.doc 16054SCL PSANI MOA USE OF FUNDS LTR AGMT-SCL Letter.doc 16053 PSANI MOA SCOPE CHANGE LTR AGMT-SCL Comments.doc

---

Greetings!
Please see attached documents. These versions include SCL comments to the BPA drafted Letter Agreements or the SCL version of a BPA to PSE Letter Agreement.
Talk to you on Tuesday…

Uzma

-----Original Appointment-----
From: Siddiqi, Uzma
Sent: Tuesday, September 30, 2014 4:53 PM
To: Siddiqi, Uzma; Phillips, John M - Transmission; Timberman,Toni L (BPA) - TSE-TPP-2; Jusupovic,Jana D (BPA) - TPC-TPP-4
Subject: PSANI Letter Agreements
When: Tuesday, October 14, 2014 9:00 AM-10:00 AM (UTC-08:00) Pacific Time (US & Canada).
Where: Conf Call

Call in number??

Department of Energy

Bonneville Power Administration
P.O. Box 61409
Vancouver, WA 98666-1409

TRANSMISSION SERVICES

~~July 3~~~~August X~~December 15, 2014

Formatted: Font color: Black

In reply refer to: TSE/TPP-2

Contract No. 14TX-16062
Letter Agreement

Ms. Booga Gilbertson
Vice President, Operations Services
Puget Sound Energy, Inc.
10885 NE 4th Street, PSE – 11S
Bellevue, WA 98004

Mr. Phillip West
Customer Service Energy Officer
The City of Seattle, City Light Department
700 Fifth Avenue, Suite 3200
Seattle, WA 98104-5031

Re: Financial Terms and Conditions

Dear Ms. Gilbertson and Mr. West:

The Bonneville Power Administration (BPA), ~~t~~The City of Seattle, City Light Department (SCL) and Puget Sound Energy, Inc. (PSE) are parties to the Memorandum of Agreement (MOA), Contract No. 11TX-15450, relating to the Preferred Puget Sound Area Plan of Service Projects and Cost Allocation. The parties to the MOA are currently in the initial stages of development of the projects described in the MOA. As this has progressed certain aspects of the MOA were identified that the parties believe need to be clarified.

This Letter Agreement is to meet the requirement in Section 7, Payment Schedule, of the MOA, which states that "The Parties shall agree in writing to the method and schedule for the cost share contributions to be made under this MOA."

BPA, Puget and Seattle agree that waiting until the completion of a project before exchanging funds (as specified in Section 7) is not the preferred course of action, given the potential for multiple years delay for completion of a project. An alternative arrangement is described below.

The following Financial Terms and Conditions shall apply to all cost sharing obligations incurred under the MOA:

FINANCIAL TERMS AND CONDITIONS STATEMENT

~~[Engel Lee is drafting language.~~
~~The SCL Proposal is to:~~
~~Bill every six months before construction.~~

DRAFT

~~Bill every three months after construction starts.~~
~~Requests for reasonable back-up documentation within three months of invoice.]~~

Each Party's cost obligation for performance of the duties associated with construction of each Preferred Plan Project shall be as specified in Sections 4 and 5 of the MOA. The cost of performing the duties associated with construction of each Preferred Plan Project shall be the actual cost of doing the work plus an overhead rate of xx% for labor and yy% for materials , representing the indirect costs of the project office plus the contractual support costs of contract negotiation, billing and accounting functions, and contract management.

Comment [TLT1]: Specify separate overheads for each Party?

Pursuant to Section 7 of the MOA, the Parties agree to the following method and schedule for the cost share of contributions required by Sections 4 and 5 of the MOA.

Prior to construction, the Parties shall invoice the Party responsible for the appropriate cost obligation for performance of its duties associated with construction of each Preferred Plan Project every six months.

After construction has commenced on a particular Preferred Plan Project, invoices shall be sent every three months to the appropriate party.

Each invoice shall be paid within thirty (30) days of receipt. A Party may request reasonable documentation of the matters presented in the invoice. Such request should be made in writing within thirty (30) days of receipt of the invoice. In the event that a Party receiving an invoice desires to contest all or a portion of such invoice, the Party shall timely pay all uncontested portions of the invoice. The Parties agree that the failure to make a request for the additional documentation of an invoice within thirty (30) days shall constitute a waiver of any claim relating to the work being invoiced.

~~Payments made to BPA shall be held in an account established for this Agreement. If BPA needs additional funds to complete the work at any time during performance of the project, BPA may request, in writing, for PSE to advance such additional funds to BPA for deposit in the account. PSE shall advance such additional funds within 30 days of BPA's written request, and BPA may temporarily stop work until PSE supplies the requested funds. If PSE does not advance such additional funds by the due date or, if at any time before completion of the project PSE elects to stop work under this Agreement, BPA will cease all work and restore, as a cost to the project at PSE's expense, government facilities and/or records (1) to their condition prior to the beginning of work under this Agreement, or (2) to some other mutually agreeable condition.~~

~~Within a reasonable time after completion of the project BPA shall make a full accounting to PSE showing the actual costs charged against the account. BPA shall either remit any unexpended balance in the account to PSE or bill for any costs in excess of the deposits in the account. PSE shall pay any excess costs within 30 days of the billing.~~

Payments not received within 30 days of the invoice date will accrue interest on the amount due from the invoice date to the date paid, at a~~n annual~~ monthly interest rate ~~equal to the higher of i) the prime rate (as reported in the Wall Street Journal in the first issue published during the month in which payment by PSE is due) plus 4 percent; or ii) such prime rate multiplied by 1.5~~of 1%.

DRAFT

- ~~Language if cost is exceeding estimate in MOA~~
- ~~Periodic (every six months?) update on status of project and where it stands with respect to estimated cost~~
- ~~Provisions for each party to invoice the others~~
- ~~And???~~

Please sign all three originals of this Agreement where indicated, returning two originals to BPA one of the addresses listed below at one of the following addresses. The remaining original is for your records. BPA will ensure that Puget and SCL have a full set of original signature pages.

In order to meet the project schedule, the executed Agreement must be received by ~~c~~Close of ~~b~~Business (COB) August 1, 2014. If BPA does not receive the executed Agreement by COB August 1, 2014, this offer Letter Agreement will be considered withdrawn.

First Class Mail	Overnight Delivery Service
Bonneville Power Administration	Bonneville Power Administration
Mail Stop: TSE/TPP-2	Mail Stop: TSE/TPP-2
P.O. Box 61409	7500 NE 41st Street – Suite 130
Vancouver, WA 98666-1409	Vancouver, WA 98662

If you have any questions, please call me at (360) 619-6015.

Sincerely,

Toni L. Timberman
Senior Transmission Account Executive
Transmission Sales

CONCUR:

PUGET SOUND ENERGY, INC.

By: _____

Name: _____
(Print/Type)

Title: _____

Date: _____

Formatted: Bulleted + Level: 1 + Aligned at: 0.04" + Indent at: 0 29"

Formatted: Bulleted + Level: 1 + Aligned at: 0.04" + Indent at: 0 29"

Formatted: List Paragraph, No bullets or numbering

Formatted: Bulleted + Level: 1 + Aligned at: 0.04" + Indent at: 0 29"

Formatted: List Paragraph, No bullets or numbering

Formatted: Bulleted + Level: 1 + Aligned at: 0.04" + Indent at: 0 29"

Formatted: List Paragraph, No bullets or numbering

DRAFT

THE CITY OF SEATTLE,
–CITY LIGHT DEPARTMENT

By: _____

Name: _____
(Print/Type)

Title: _____

Date: _____

DRAFT

bcc:
R. Shier – FRG-2
P. Walters – FRG-2
B. Bennett – LT-7
C. Hamel – TEP/TPP-1
S. Kannan – TFB/DOB-1
J. Jusupovic – TPC/TPP-4
D. Sauer – TPCC/TPP-4
T. Van Cleave – TPCC/TPP-4
J. Brank – TPCV/OLYMPIA
P. Fiedler – TPCV/TPP-4
T. Timberman – TSE/TPP-2
P. Gibson – TSES/TPP-2
Customer File – TPC/TPP-4 (ED-21-11/Tacoma Power)
Customer File – TSE/TPP-2 (TM-11/Tacoma Power)
PWA File – TPC/TPP-4 (N0310/Latest Status)
Official File – CCM_Support (Agreement 14TP-10657)

DRAFT

Department of Energy

Bonneville Power Administration
P.O. Box 61409
Vancouver, WA 98666-1409

TRANSMISSION SERVICES

~~August XX~~December 15, 2014

In reply refer to: TSE/TPP-2

Contract No. 14TX-16060
Letter Agreement

Ms. Booga Gilbertson
Vice President Operations Services
Puget Sound Energy, Inc.
P.O. Box 90868
Bellevue, WA 98009-0868

Mr. Phillip West
Customer Service Energy Officer
The City of Seattle, City Light Department
700 Fifth Ave., Suite 2822
Seattle, WA 98104-5031

RE: MOA Section 8, National Environmental Policy Act Assessment

Dear Ms. Gilbertson and Mr. West:

The Bonneville Power Administration (BPA), Puget Sound Energy, Inc., (PSE) and The City of Seattle, City Light Department (SCL) are parties to the Memorandum of Agreement (MOA), Contract No. 11TX-15450, relating to the Preferred Puget Sound Area Plan of Service Projects and Cost Allocation. The parties to the MOA are currently in the initial stages of development of the projects described in the MOA. As this has progressed, certain aspects of the MOA were identified that the parties believe need to be clarified.

This Agreement ~~is intended to clarify~~clarifies BPA's intended actions to satisfy BPA's obligations under the National Environmental Policy Act (NEPA) for its role in the MOA, as described in Section 8 of the MOA, as well as the nature of the Preferred Plan Projects described in the MOA for the purposes of NEPA.

With respect to environmental compliance BPA, as a Federal agency, has certain obligations and responsibilities under NEPA and other federal laws (collectively the NEPA review process) that it must fulfill before it can make a final decision concerning whether to participate in implementation of certain of the Preferred Plan Projects described in Section 3 of the MOA and the capital cost allocation described in Sections 4 and 5 of the MOA. Nothing in the MOA shall be construed as obligating or committing BPA to make a final decision concerning any of the Preferred Plan Projects and capital cost allocation before completing the NEPA review process. In addition, BPA reserves the right to determine the appropriate NEPA and other environmental compliance strategies for its actions under the MOA, and to choose any alternatives considered in the NEPA process, including the no-action alternative.

Furthermore, the parties acknowledge and agree that while the MOA identifies a number of Preferred Plan Projects to be undertaken by the parties, each of these projects could proceed independently from the others and that no single project is contingent or dependent upon another in the goal of relieving transmission congestion in the Puget Sound Area. As such, BPA, SCL, and PSE may elect to conduct separate environmental reviews for each project identified in the MOA.

In order to meet the project schedule, please sign all originals of this Agreement, retain one original for your records and return the remaining two originals to my attention at one of the following addresses at your earliest convenience, but not later than Close of Business on ~~August 8~~December 15, 2014:

Formatted: Font: 11 pt

Formatted: Font: 11 pt

First Class Mail	Overnight Delivery Service
Bonneville Power Administration	Bonneville Power Administration
Mail Stop: TSE/TPP-2	Mail Stop: TSE/TPP-2
P.O. Box 61409	7500 NE 41st Street – Suite 130
Vancouver, WA 98666-1409	Vancouver, WA 98662

BPA will ensure that Puget and SCL have a full set of original signature pages.

Please do not hesitate to contact Justin Moffett at (503) 230-3233 or me at (360) 619-6015 if you would like to discuss this information.

Sincerely,

Toni L. Timberman
Senior Transmission Account Executive
Transmission Sales

CONCUR:

Formatted: Font: Times New Roman

PUGET SOUND ENERGY, INC.

By: _____

Name: _____
(Print/Type)

Title: _____

Date: _____

THE CITY OF SEATTLE,
CITY LIGHT DEPARTMENT

Formatted: Font: Times New Roman

By: _____

Name: _____
(Print/Type)

Title: _____

Date: _____

City of Seattle

Seattle City Light

December 15, 2014

Contract No. 14TX-16054
Letter Agreement

Ms. Booga Gilbertson, Vice President,
Operations Services
Puget Sound Energy, Inc.
10885 NE 4th Street, PSE – 11S
Bellevue, WA 98004

RE: PSE's 230kV Transformer Addition Project

Dear Ms. Gilbertson:

The Bonneville Power Administration (BPA), Puget Sound Energy, Inc, (PSE) and The City of Seattle, City Light Department (SCL) are parties to the Memorandum of Agreement (MOA), Contract No. 11TX-15450, relating to the Preferred Puget Sound Area Plan of Service Projects and Cost Allocation. The parties to the MOA are currently in the initial stages of development of the projects described in the MOA. As this has progressed, certain aspects of the MOA were identified that the parties believe need to be clarified.

This Agreement is intended to clarify the use of SCL funds contributed toward the adjusted projected capital cost of the Puget Preferred Plan Projects described in Sections 4(c) and 5(a) of the MOA.

The parties acknowledge that SCL is not involved in any manner or capacity in PSE's Sammamish to Lakeside to Talbot Rebuild Project and agree that no SCL funds provided under the MOA will be allocated to PSE's Sammamish to Lakeside to Talbot Rebuild Project. Instead, all SCL funds under the MOA will be allocated to equipment purchase within PSE's new 230 kV Transformer Addition Project.

In order to meet the project schedule, please sign both originals of this Agreement, retain one original for your records and return the remaining original to my attention at one of the following addresses at your earliest convenience, but not later than Close of Business on December 15, 2014:

If you have any questions, please call me at 206-684-3718.

Sincerely,

Phil West
CSED Officer
Seattle City Light

CONCUR:

PUGET SOUND ENERGY, INC.

By: _____

Name: _____
(Print/Type)

Title: _____

Date: _____

Department of Energy

Bonneville Power Administration
P.O. Box 61409
Vancouver, WA 98666-1409

TRANSMISSION SERVICES

~~July 22~~December 15, 2014

In reply refer to: TSE/TPP-2

Contract No. 14TX-16053
Letter Agreement

Ms. Booga Gilbertson
Vice President, Operations Services
Puget Sound Energy, Inc.
Light Department
10885 NE 4th Street, PSE – 11S
Bellevue, WA 98004

Mr. Phillip West
Customer Service Energy Officer
~~City of Seattle~~The City of Seattle, City

700 Fifth Avenue, Suite 2822
Seattle, WA 98104-5031

RE: Covington 500kV Transformer Addition Project
Bothell to SnoKing Reconductor Project

Dear Ms. Gilbertson and Mr. West:

The Bonneville Power Administration (BPA), Puget Sound Energy, Inc, (PSE) and ~~City of Seattle~~The City of Seattle, City Light Department (SCL) are parties to the Memorandum of Agreement (MOA), Contract No. 11TX-15450, relating to the Preferred Puget Sound Area Plan of Service Projects and Cost Allocation. The parties to the MOA are currently in the initial stages of development of the projects described in the MOA. As this has progressed, certain aspects of the MOA were identified that the parties believe need to be clarified.

This Agreement is intended to clarify the scope changes related to the Covington 500 kV Transformer Addition Project described in Section 3(a) of the MOA and the Bothell to SnoKing Reconductor Project described in Section 3(c) of the MOA.

BPA's transformer addition originally planned for Covington Substation has been moved to Raver Substation. There is no change in financial responsibility under the MOA due to this relocation.

The Bothell to SnoKing Reconductor Project was identified in the MOA as an SCL project. However, during subsequent discussions it was discovered that BPA owns the first ½ mile of these lines on the SnoKing end. BPA will rebuild its owned portion of these lines at its cost, including any necessary replacement of equipment within SnoKing Substation associated with these lines. BPA will rebuild its lines such that no additional forces are exerted on the existing SCL interconnection structures. SCL will reconductor its portion of the lines with high temperature conductor and cost-sharing will be per the MOA. The SCL-BPA interconnection points for both lines shall remain the same.

DRAFT

In order to meet the project schedule, please sign all originals of this Agreement, retain one original for your records and return the remaining two originals to my attention at one of the following addresses at your earliest convenience, but not later than Close of Business on ~~August 30, 2014~~December 15, 2014:

First Class Mail	Overnight Delivery Service
Bonneville Power Administration Mail Stop: TSE/TPP-2 P.O. Box 61409 Vancouver, WA 98666-1409	Bonneville Power Administration Mail Stop: TSE/TPP-2 7500 NE 41st Street – Suite 130 Vancouver, WA 98662

BPA will ensure that Puget and SCL have a full set of original signature pages.

If you have any questions, please call me at (360) 619-6015.

Sincerely,

Toni L. Timberman
Senior Transmission Account Executive
Transmission Sales

CONCUR:

PUGET SOUND ENERGY, INC.

By: _____

Name: _____
(Print/Type)

Title: _____

Date: _____

~~CITY OF SEATTLE~~THE CITY OF SEATTLE,
CITY LIGHT DEPARTMENT

By: _____

Name: _____
(Print/Type)

Title: _____

Date: _____

bcc:
C. Olsen– KSC-TPP-1
B. Bennett – LT-7
J. Weiss – TPCV/COVINGTON
T. Timberman – TSE/TPP-2
P. Gibson – TSES/TPP-2
Customer File – TS/-TPP-2 (TM-11, Puget Sound Energy, Inc.)
Customer File – TSE/TPP-2 (TM-11, City of Seattle, City Light Department.)
Official File – CCM Support

(W:\CT\Puget Sound Energy, Inc\Drafts\16053_PSE-SCL-PSANI MOA SCOPE CHANGE LTR AGMT.Doc)

From: Timberman,Toni L (BPA) - TSE-TPP-2
To: Jusupovic,Jana D (BPA) - TPC-TPP-4
Subject: Re: PSANI Letter Agreements
Date: Tuesday, October 14, 2014 6:44:46 AM

ThankS Jana. Having a room is good.

From: Jusupovic,Jana D (BPA) - TPC-TPP-4
Sent: Monday, October 13, 2014 03:48 PM Pacific Standard Time
To: Timberman,Toni L (BPA) - TSE-TPP-2
Subject: PSANI Letter Agreements

Hi Toni,

Just in case, I grabbed us a conference room for this meeting so that at least you and I can be in the same room.

If you'd like to just stay at your desk that works too ☺

From: Siddiqi, Uzma
To: Phillips, John M - Transmission; Timberman,Toni L (BPA) - TSE-TPP-2; Jusupovic,Jana D (BPA) - TPC-TPP-4
Subject: PSANI Letter Agreements

Call in number is 206-733-9954

From: Moffett,Justin T (BPA) - KEC-4
To: Timberman,Toni L (BPA) - TSE-TPP-2
Subject: FW: Lakeside Substation Information
Date: Wednesday, October 15, 2014 2:15:25 PM

Here is the email I mentioned just now.

Justin T. Moffett, PWS
Environmental Protection Specialist | KEC-4
BONNEVILLE POWER ADMINISTRATION
bpa.gov | P 503-230-3233 | C 503-758-2088

From: Strauch, Bradley R [mailto:bradley.strauch@pse.com]
Sent: Monday, October 13, 2014 10:09 AM
To: Moffett,Justin T (BPA) - KEC-4
Subject: RE: Lakeside Substation Information

Justin,

As a follow-up to our previous email string (see below), I was wondering what level of NEPA effort you were doing (CatEx, EA, EIS) and what is the current status. If it is easier to discuss over the phone, please feel free to call me.

Brad Strauch
Sr. Land Planner/Environmental Scientist
PUGET SOUND ENERGY
P.O. Box 97034, PSE-09N
Bellevue, WA 98009-9734
Office: 425-456-2556
Fax: 425-462-3233
(b) (6) [redacted]

From: Moffett,Justin T (BPA) - KEC-4 [mailto:jtmoffett@bpa.gov]
Sent: Wednesday, November 06, 2013 8:05 AM
To: Strauch, Bradley R
Subject: RE: Lakeside Substation Information

Thanks Brad this is very helpful.

Justin T. Moffett, PWS
Environmental Protection Specialist
Bonneville Power Administration
(503) 230-3233 office
(b) (6) [redacted]
jtmoffett@bpa.gov

From: Strauch, Bradley R [mailto:bradley.strauch@pse.com]
Sent: Wednesday, November 06, 2013 7:36 AM
To: Moffett,Justin T (BPA) - KEC-4
Subject: RE: Lakeside Substation Information

Justin,

See the attached figure, which shows the proposed Lakeside 230 Station and delineated wetlands. Let me know if you have any questions.

Brad

From: Moffett,Justin T (BPA) - KEC-4 [mailto:jtmoffett@bpa.gov]
Sent: Tuesday, November 05, 2013 1:35 PM
To: Strauch, Bradley R
Subject: Lakeside Substation Information

Hi Brad,
When do you think you'll be able to send me the information on Lakeside Substation?
Thanks.

Justin T. Moffett, PWS
Environmental Protection Specialist
Bonneville Power Administration
(503) 230-3233 office
(b) (6) [redacted]
jtmoffett@bpa.gov

From: Strauch, Bradley R [mailto:bradley.strauch@pse.com]
Sent: Monday, July 08, 2013 3:02 PM
To: Moffett,Justin T (BPA) - KEC-4
Subject: RE: PSANI Update - PM Contacts

Here is the contact information for the Project Managers.

Leann Kostek
Sr. Project Manager
(425) 456-2647 office
(b) (6) [redacted]
leann.kostek@pse.com

Jens Nedrud, P.E.
Project Manager
(425) 462-3818 office
(b) (6) [redacted]
jens.nedrud@pse.com

From: Strauch, Bradley R
Sent: Monday, July 08, 2013 12:46 PM
To: 'jtmoffett@bpa.gov'
Subject: RE: PSANI Update

Justin,

When you have a chance, you can contact me regarding the status of Sammamish-Talbot (Eastside 230) project.

Brad Strauch
Sr. Land Planner
PUGET SOUND ENERGY
Ph: 425-456-2556
Fax: 425-462-3223
(b) (6) [redacted]
P.O. Box 97034, PSE-09N
Bellevue, WA 98009-9734
www.PSE.com

From: Bamba, Roque
Sent: Monday, July 08, 2013 12:02 PM
To: Strauch, Bradley R
Subject: FW: PSANI Update

Brad: Would you mind calling Justin?

From: Moffett,Justin T (BPA) - KEC-4 [mailto:jtmoffett@bpa.gov]
Sent: Wednesday, July 03, 2013 10:52 AM
To: Bamba, Roque
Cc: Marleau,Michael L (BPA) - TEP-TPP-1
Subject: RE: PSANI Update

Hi Roque,
I'm BPA's environmental lead for the Puget Sound Area Plan Northern Intertie project and would like to speak to you regarding PSE's environmental review process for the Sammamish-Lakeside-Talbot rebuild, specifically your cultural resources surveys and Section 106 consultation. Could you give me a call when you have a chance?
Thanks.

Justin T. Moffett, PWS
Environmental Protection Specialist
Bonneville Power Administration
(503) 230-3233 office
(b) (6) [redacted]
jtmoffett@bpa.gov

From: Marleau,Michael L (BPA) - TEP-TPP-1
Sent: Tuesday, June 11, 2013 9:49 AM
To: Moffett,Justin T (BPA) - KEC-4
Cc: roque.bamba@pse.com
Subject: FW: PSANI Update

Justin, I mistyped Roque's email address on the prior email.

I think this one is it.

From: Marleau,Michael L (BPA) - TEP-TPP-1
Sent: Tuesday, June 11, 2013 9:43 AM
To: Moffett,Justin T (BPA) - KEC-4
Cc: roquebamba@pse.com; 'Phillips, John M - Transmission'; 'Kostek, Leann'; Seabrook, Joseph W -Joe - Transmission

Subject: RE: PSANI Update

Thanks Justin, please coordinate with Roque Bamba at Puget Sound Energy:

Roque Bamba
Manager of the Environmental and Use Group
roque.bamba@pse.com
(425) 462-3774

Also copied on this from PSE are:

- Phillips, John M
- Seabrook, Joseph
- Kostek, Leann

From: Moffett,Justin T (BPA) - KEC-4
Sent: Monday, June 10, 2013 3:25 PM
To: Marleau,Michael L (BPA) - TEP-TPP-1
Subject: RE: PSANI Update

Mike,
Have you been in contact with anyone at Puget Sound Energy about their projects in the PSANI MOA? If so can you send me their contact information? I need to coordinate with them on their environmental review.
Thanks.

Justin T. Moffett, PWS
Environmental Protection Specialist
Bonneville Power Administration
(503) 230-3233 office
(b) (6) [redacted]
jtmoffett@bpa.gov

From: Marleau,Michael L (BPA) - TEP-TPP-1
Sent: Thursday, May 23, 2013 8:15 AM
To: Moffett,Justin T (BPA) - KEC-4
Subject: RE: PSANI Update

Hey Justin, I'm expecting construction to begin as early as October of 2014 so I'll need the NEPA done for that. SCL and PSE have a different schedule.

From: Moffett,Justin T (BPA) - KEC-4
Sent: Wednesday, May 22, 2013 4:39 PM
To: Marleau,Michael L (BPA) - TEP-TPP-1
Subject: RE: PSANI Update

Hi Mike,
Do you have a schedule for the improvements at Raver and Covington and when you need our NEPA analysis completed? The MOA w/ Seattle City Light says Covington 500kV transformer addition will happen in 2018 and the Northern intertie RAS improvement (is this the work at Raver??) is scheduled for 2014. Is this correct?

Thanks.

Justin T. Moffett, PWS
Environmental Protection Specialist
Bonneville Power Administration
(503) 230-3233 office
(b) (6) [redacted]
jtmoffett@bpa.gov

From: Marleau,Michael L (BPA) - TEP-TPP-1
Sent: Monday, April 22, 2013 1:14 PM
To: Moffett,Justin T (BPA) - KEC-4
Cc: Lynard,Gene P (BPA) - KEC-4; O'Donnchadha,Brian M (CONTR) - KEC-4
Subject: Re: PSANI Update

Thanks Justin, yes please contact Margee.

From:	Adams,Hub V (BPA) - LN-7
To:	Timberman,Toni L (BPA) - TSE-TPP-2; Moffett,Justin T (BPA) - KEC-4; Marleau,Michael L (BPA) - TEP-TPP-1; Jusupovic,Jana D (BPA) - TPC-TPP-4
Subject:	FYI links to City of Bellevue items for Energize Eastside
Date:	Wednesday, October 15, 2014 3:23:34 PM

This is a link to a city council document from July 2014 that is a briefing on the role of the City and other entities in the Energize Eastside project:

http://nebula.wsimg.com/5a8fbd0d9bbc93f77811bdcd53b0f8b4?AccessKeyId=2781B7394B4601945875&disposition=0&alloworigin=1

And this is a link to an Aug 2014 city staff presentation on the planned SEPA process for the project (see slides 7 and 12-16 for timing and phasing of SEPA EISs):

http://www.ci.bellevue.wa.us/other/Energize_Eastside_August_13_EIS_Presentation_Final.pptx

From:	Siddiqi, Uzma
To:	Phillips, John M - Transmission; Timberman,Toni L (BPA) - TSE-TPP-2; Jusupovic,Jana D (BPA) - TPC-TPP-4
Subject:	RE: PSANI Letter Agreements
Date:	Friday, October 17, 2014 4:02:36 PM

Meeting Notes

Subject: PSANI Letter Agreements
When: Tuesday, October 14, 2014 9:00 AM-10:00 AM

Action Items for Letter Agreements

- Financial Terms
  - 3-party agreements (concurrence)
    - BPA-SCL
    - BPA-PSE
    - PSE-SCL
  - BPA lawyer will review SCL proposal
  - PSE lawyer will review SCL proposal
- NEPA
  - 3-party agreement
  - PSE lawyer will review
- Participate in PSE's Transformer Project
  - 3-party agreements (concurrence)
  - PSE lawyer to review
  - SCL commitment could be in rolled into Financial Terms letter
- Scope Changes
  - 3-party agreement
  - BPA will review SCL comments

Next Meeting Nov 7th, time is TBD.

-----Original Appointment-----
From: Siddiqi, Uzma
Sent: Tuesday, September 30, 2014 4:53 PM
To: Siddiqi, Uzma; Phillips, John M - Transmission; Timberman,Toni L (BPA) - TSE-TPP-2; Jusupovic,Jana D (BPA) - TPC-TPP-4
Subject: PSANI Letter Agreements
When: Tuesday, October 14, 2014 9:00 AM-10:00 AM (UTC-08:00) Pacific Time (US & Canada).
Where: SCL_SMT_ConfRm3657-12

From: Marleau,Michael L (BPA) - TEP-TPP-1
To: Timberman,Toni L (BPA) - TSE-TPP-2
Cc: Weiss,John R (BPA) - TPCV-COVINGTON; Jusupovic,Jana D (BPA) - TPC-TPP-4
Subject: RE: concern about today"s meeting
Date: Friday, October 17, 2014 4:35:54 PM

Toni, no worries. I just gave a project update on what we're doing....no agreement stuff.

Thanks,
Mike

From: Timberman,Toni L (BPA) - TSE-TPP-2
Sent: Friday, October 17, 2014 8:56 AM
To: Uzma Siddiqi (uzma.siddiqi@seattle.gov)
Cc: Weiss,John R (BPA) - TPCV-COVINGTON; Marleau,Michael L (BPA) - TEP-TPP-1; Jusupovic,Jana D (BPA) - TPC-TPP-4
Subject: concern about today's meeting

Hi Uzma,

I am concerned about the agenda for today's meeting. It was represented as a Project Manager meeting, but the agenda appears to be a complete review of everything under the MOA. BPA is not going to have staff at the meeting to discuss anything other than the Bothell-SnoKing project, so please do not expect them to be prepared to discuss the other agenda items.

I will be working with Hardev to identify a person to represent BPA on this entire agreement. I will let you know who this is, and then we can be better prepared for these meetings. It appears that, while you are the sole representative for Seattle, that is not the case for BPA or Puget. Leann is the project manager for their project, but I do not believe she is in a position to discuss the agreement or the pending Letter Agreements. Mike Marleau is the project manager for Bothell-SnoKing, but he has no involvement in or knowledge of or responsibility for any other aspects of the MOA.

I do not believe that the MOA or the pending Letter Agreements should be a topic at today's meeting because of the lack of appropriate representation from BPA, and probably also Puget.

Please give me a call if you would like to discuss further. BPA will likely leave the meeting following discussion of the Bothell-SnoKing project.

I apologize for any miscommunications related to this. We will do better moving forward.

Thanks,
Toni

From: Jusupovic,Jana D (BPA) - TPC-TPP-4
To: Timberman,Toni L (BPA) - TSE-TPP-2
Subject: RE: Conf Call: PSANI Letter Agreements Follow-Up
Date: Monday, October 20, 2014 8:37:59 AM

Morning Toni,

Does this meeting invite mean, we are meeting in person with Uzma?

I'm fine with that; I just need to make sure to change some meetings around especially if we're coming the meeting the night before or the morning of?

Just let me know! ☺

-----Original Appointment-----
From: Siddiqi, Uzma [mailto:Uzma.Siddiqi@seattle.gov]
Sent: Friday, October 17, 2014 4:09 PM
To: Siddiqi, Uzma; Timberman,Toni L (BPA) - TSE-TPP-2; Jusupovic,Jana D (BPA) - TPC-TPP-4; SCL_SMT_ConfRm3657-12
Subject: Conf Call: PSANI Letter Agreements Follow-Up
When: Friday, November 07, 2014 2:30 PM-3:30 PM (UTC-08:00) Pacific Time (US & Canada).
Where: SCL_SMT_ConfRm3657-12

From:	Timberman,Toni L (BPA) - TSE-TPP-2
To:	Adams,Hub V (BPA) - LN-7
Cc:	Jusupovic,Jana D (BPA) - TPC-TPP-4; Klumpp,Elizabeth C (BPA) - DIR-WSGL
Subject:	PSANI MOA Letter Agreements
Date:	Friday, October 24, 2014 4:15:00 PM
Attachments:	16062 PSANI MOA Financial Terms and Conditions (2).doc draft PSANI MOA letters.msg

---

Hub, per our conversation today, attached is an e-mail containing the draft letters that were sent to Puget and Seattle for review. Please ignore the FTC letter in that e-mail and use the separate one attached to this e-mail.

You are going to try to combine these four agreements into one – although I am not sure that can be done with the FTC one because Seattle will have a separate arrangement with Puget than BPA will. Puget last said that rather than exchanging funds with Seattle they would prefer to just net out at the end.

Thanks for your help with this. As we discussed, we should move quickly on this in order to have a signed agreement that positively confirms for the City of Bellevue that BPA will not be participating in the Eastside project so they do not need to worry about NEPA. See the article in Clearing Up – I expect the City will be contacting BPA for its input.

Toni

From: Timberman,Toni L (BPA) - TSE-TPP-2
Sent: Tuesday, September 30, 2014 11:13 AM
To: Jusupovic,Jana D (BPA) - TPC-TPP-4; 'Uzma Siddiqi (uzma.siddiqi@seattle.gov)'; 'john.phillips@pse.com'
Subject: Conf call for PSANI MOA Letter Agreements

I would like to schedule a conference call to discuss the draft PSANI MOA Letter Agreements.

Please let me know your first and second choices from the following options:

- Friday October 3 anytime between 1:00 and 4:00;
- Tuesday October 14 – anytime (suggest what works best for you)
- Thursday October 16 9:30-10:30 or 1:00-2:00

I have attached the draft agreements for your reference, along with the one for the financial which had not been previously sent.

Thanks,
Toni
Toni L. Timberman
Senior Transmission Account Executive
Bonneville Power Administration

(360) 619-6015 office
(b) (6) [redacted]
tltimberman@bpa.gov

Department of Energy

Bonneville Power Administration
P.O. Box 61409
Vancouver, WA 98666-1409

TRANSMISSION SERVICES

August X, 2014

In reply refer to: TSE/TPP-2

Contract No. 14TX-16062
Letter Agreement

Ms. Booga Gilbertson
Vice President, Operations Services
Puget Sound Energy, Inc.
10885 NE 4th Street, PSE – 11S
Bellevue, WA 98004

Mr. Phillip West
Customer Service Energy Officer
City of Seattle, City Light Department
700 Fifth Avenue, Suite 3200
Seattle, WA 98104-5031

Dear Ms. Gilbertson and Mr. West:

The Bonneville Power Administration (BPA), the City of Seattle, City Light Department (Seattle City Light) and Puget Sound Energy, Inc. (Puget) are parties to the Memorandum of Agreement (MOA), Contract No. 11TX-15450, relating to the Preferred Puget Sound Area Plan of Service Projects and Cost Allocation. The parties to the MOA are currently in the initial stages of development of the projects described in the MOA. As this has progressed certain aspects of the MOA were identified that the parties believe need to be clarified.

The purpose of this Letter Agreement is to meet the requirement in Section 7, Payment Schedule, of the MOA, which states that "The Parties shall agree in writing to the method and schedule for the cost share contributions to be made under this MOA." BPA, Puget and Seattle City Light agree that waiting until the completion of a project before exchanging funds (as specified in Section 7) is not the preferred course of action, given the potential for multiple year delays for completion of a project. An alternative arrangement is described below.

BPA, Puget and Seattle City Light hereby agree to the following billing provisions:

1. Each party's cost obligation for performance of the duties associated with construction of each Preferred Plan Project shall be as specified in Sections 4 and 5 of the MOA. The cost of performing such duties shall be the actual cost of doing the work plus overheads (do we need to specify the rates that will be charged by Puget and Seattle City Light?).

2. Seattle City Light Preferred Plan Projects

   (a) Seattle City Light shall submit invoices to BPA and Puget on a quarterly basis for BPA and Puget cost obligations associated with construction of the Seattle City Light Preferred Plan Projects. Invoices shall include supporting documentation showing cost detail. BPA and Puget shall remit payment within 30 days following receipt of the invoices.

   (b) Seattle City Light shall notify BPA and Puget immediately if, at any time during the course of the project, Seattle City Light expects BPA or Puget costs to exceed the funding obligation described in Section 4 (b) of the MOA. If BPA and Puget agree to

the cost increase, a modification to this agreement will be prepared to provide for the additional funding amount.

3. Puget Preferred Plan Projects

(a) Puget shall submit invoices to BPA and Seattle City Light on a quarterly basis for BPA and Seattle City Light cost obligations associated with construction of the Puget Preferred Plan Projects. Invoices shall include supporting documentation showing cost detail. BPA and Seattle City Light shall remit payment within 30 days following receipt of the invoices.

(b) Puget shall notify BPA and Seattle City Light immediately if, at any time during the course of the project, Puget expects BPA or Seattle City Light costs to exceed the funding obligation described in Section 4 (c) of the MOA. If BPA and Seattle City Light agree to the cost increase, a modification to this agreement will be prepared to provide for the additional funding amount.

4. Billing Addresses

Bonneville Power Administration
ATTN:
P.O. Box 61409
Vancouver, WA 98666-1409

Puget Sound Energy
ATTN:
Address
City/State/Zip

Seattle City Light
ATTN:
Address
City/State/Zip

Please sign all originals of this agreement, retain one original for your records and return the remaining originals to my attention at one of the following addresses at your earliest convenience, but not later than Close of Business on September xx, 2014:

First Class Mail	Overnight Delivery Service
Bonneville Power Administration Mail Stop: TSE/TPP-2 P.O. Box 61409 Vancouver, WA 98666-1409	Bonneville Power Administration Mail Stop: TSE/TPP-2 7500 NE 41st Street – Suite 130 Vancouver, WA 98662

BPA will ensure that Puget and Seattle City Light have a full set of original signature pages.

If you have any questions, please call me at (360) 619-6015.

Sincerely,

DRAFT

Toni L. Timberman
Senior Transmission Account Executive
Transmission Sales

CONCUR:

PUGET SOUND ENERGY, INC.

By: _____

Name: _____
(Print/Type)

Title: _____

Date: _____

CITY OF SEATTLE,
CITY LIGHT DEPARTMENT

By: _____

Name: _____
(Print/Type)

Title: _____

Date: _____

DRAFT

bcc:
C. Olsen– KSC-TPP-1
B. Bennett – LT-7
J. Weiss – TPCV/COVINGTON
T. Timberman – TSE/TPP-2
P. Gibson – TSES/TPP-2
Customer File – TS/-TPP-2 (TM-11, Puget Sound Energy, Inc.)
Customer File – TSE/TPP-2 (TM-11, City of Seattle, City Light Department.)
Official File – CCM Support

(W:\CT\Puget Sound Energy, Inc\Drafts\16062 PSANI MOA Financial Terms And Conditions.Doc)

DRAFT

From: Timberman,Toni L (BPA) - TSE-TPP-2
To: "Uzma Siddiqi (uzma.siddiqi@seattle.gov)"; "john.phillips@pse.com"
Subject: draft PSANI MOA letters
Date: Tuesday, August 19, 2014 2:58:00 PM
Attachments: 11TX-15450_CT_PDF.pdf
16053_PSANI_MOA_SCOPE_CHANGE_LTR_AGMT.doc
16054_PSANI_MOA_USE_OF_FUNDS_LTR_AGMT.doc
16060_PSANI_MOA_NEPA_LTR_AGMT_8_8_TT.doc
16062_PSANI_MOA_Financial_Terms_and_Conditions.doc

Attached are the four draft PSANI MOA letters. I also attached the MOA for your reference.

Note that the letter agreement related to how/when money changes hands is very draft, with BPA staff working to develop the language. Once the draft for that one is done, we can schedule a conf. call to work out the details with the folks that need to weigh in.

The other three look pretty good and have passed BPA legal review. They also have been reviewed by BPA environmental staff and the project manager.

Let me know what you think.

Toni

Contract No. 11TX-15450

MEMORANUDUM OF AGREEMENT

executed by the

UNITED STATES OF AMERICA

DEPARTMENT OF ENERGY

acting by and through the

BONNEVILLE POWER ADMINISTRATION

and

THE CITY OF SEATTLE

acting by and through its

CITY LIGHT DEPARTMENT

and

PUGET SOUND ENERGY, INC.

(Relating to the Preferred Puget Sound Area Plan of Service Projects and Cost Allocation)

This MEMORANDUM OF AGREEMENT (MOA) is executed by the UNITED STATES OF AMERICA, Department of Energy, acting by and through the BONNEVILLE POWER ADMINISTRATION (BPA), THE CITY OF SEATTLE, acting by and through its CITY LIGHT DEPARTMENT (Seattle City Light), and PUGET SOUND ENERGY INC. (Puget). BPA, Seattle City Light, and Puget are sometimes referred to individually as "Party" and collectively as "Parties".

WHEREAS, BPA owns and is responsible for the reliable operation of the Federal Columbia River Transmission System (FCRTS),

WHEREAS, Seattle City Light and Puget each own and operate electric systems that are interconnected with the FCRTS in the Puget Sound Area and electric power is delivered within those electric systems, and to or from them by BPA over the FCRTS,

WHEREAS, the Puget Sound Area experiences periods of transmission congestion that may require mitigation to maintain reliable operation of the Puget Sound Area Interconnection, including in some cases, curtailments of firm transmission service,

WHEREAS, as of February 2011, the Parties entered into Contract No. 11TX-15290, "Temporary Operational Support Program Agreement," that provides for voluntary changes in planned generation, including an increase in Puget Sound Area generation, as temporary and short-term measures for relieving forecasted transmission congestion conditions that are expected to adversely affect the reliable operation of the Puget Sound Area Interconnection,

WHEREAS, representatives from each of the Parties and other entities participated in regional studies to develop a long term plan, and implement a range of physical improvements to preserve the reliable operation of the Puget Sound Area interconnection, and reduce the need to curtail firm transmission service,

WHEREAS, the Parties have identified the projects described herein that, when taken as a whole, are expected to preserve the reliable operation of the Puget Sound Area Interconnection, and reduce the need to curtail firm transmission service; and it is in their individual and collective interests to continue to support the efforts needed to carry out these projects, and

WHEREAS, the transmission congestion affecting the Puget Sound Area interconnection is a shared problem, and the projects and cost sharing arrangements provided herein are appropriate.

NOW THEREFORE, in consideration of the mutual obligations and undertakings herein, the sufficiency of which is acknowledged, the Parties agree as follows:

1. DEFINITIONS

(a) "Bothell to SnoKing Reconductor Project" means the project identified in the Preferred Plan of Service in which Seattle City Light will reconductor the existing Bothell to SnoKing No. 1 and No. 2 230 kV lines with high-temperature conductor.

(b) "BPA Preferred Plan Projects" means, collectively, the Covington 500 kV Transformer Addition Project and the Northern Intertie Remedial Action Scheme ("RAS") Improvement Project.

(c) "Broad Street Inductor Project" means the project identified in the Preferred Plan of Service in which Seattle City Light will add series inductors (up to 10 ohm) to the Massachusetts-Broad Street 115 kV line.

(d) "ColumbiaGrid" means the Washington non-profit membership corporation formed to improve the operational efficiency, reliability, and planned expansion of the Pacific Northwest transmission grid, the

eight members of which, as of the Effective Date, are Avista Corporation; BPA; Public Utility District No. 1 of Chelan County, Washington; Public Utility District No. 2 of Grant County, Washington; Puget; Seattle City Light; Public Utility District No. 1 of Snohomish County, Washington; and Tacoma Power.

(e) "Covington 500 kV Transformer Addition Project" means the project identified in the Preferred Plan of Service in which BPA will install a third 500–230 kV transformer at the BPA Covington Substation.

(f) "Delridge to Duwamish Reconductor Project" means the project identified in the Preferred Plan of Service in which Seattle City Light will reconductor the existing Delridge to Duwamish 230 kV line with high-temperature conductor.

(g) "Lakeside 230 kV Transformer Addition Project" means the project identified in the Preferred Plan of Service in which Puget will install a 230–115 kV transformer at the Puget Lakeside Substation.

(h) "Maple Valley to SnoKing Reconductor Project" means the project identified in the Preferred Plan of Service in which Seattle City Light will reconductor the existing Maple Valley to SnoKing 230 kV line with high-temperature conductor.

(i) "North Downtown Inductor Project" means the project identified in the Preferred Plan of Service in which Seattle City Light will add series inductors (up to 10 ohm) to the East Pine-Broad Street line as part of Seattle City Light's North Downtown Substation Project.

(j) "Northern Intertie RAS Improvement Project" means the project identified in the Preferred Plan of Service in which BPA will install new software for and re-wire electrical protection devices on the Northern Intertie RAS.

(k) "Northern Intertie RAS" means the existing BPA pre-programmed set of automatic operating steps that are designed to protect the regional high voltage electric grid in the event of a loss of one of the two Custer-Monroe 500 kV lines.

(l) "Preferred Plan of Service" means the "Updated Recommended Transmission Expansion Plan for the Puget Sound Area to Support Winter South-to-North Transfers" approved by ColumbiaGrid on October 28, 2011, a copy of which is attached as Exhibit A to this MOA.

(m) "Preferred Plan Projects" means, collectively, the BPA Preferred Plan Projects, the Puget Preferred Plan Projects, and the Seattle City Light Preferred Plan Projects.

(n) "Puget Preferred Plan Projects" means the Sammamish to Lakeside to Talbot Rebuild Project and the Lakeside 230 kV Transformer Addition Project.

(o) "Sammamish to Lakeside to Talbot Rebuild Project" means the project identified in the Preferred Plan of Service in which Puget will upgrade Puget's existing Sammamish to Lakeside to Talbot 115 kV lines to 230 kV operation using Puget's existing Sammamish to Lakeside to Talbot utility corridor.

(p) "Seattle City Light Preferred Plan Projects" means the Bothell to SnoKing Reconductor Project, the Broad Street Inductor Project, the North Downtown Inductor Project, and the Delridge to Duwamish Reconductor Project.

2. TERM

The term of this MOA shall be effective on the date of execution by all Parties (Effective Date) and shall continue until the earliest to occur of the following: (i) the date of completion of the last of the Preferred Plan Projects; (ii) a Party terminates this MOA pursuant to section 5(c) of this MOA; or (iii) December 31, 2020.

3. PREFERRED PLAN OF SERVICE PROJECTED PROJECT COMPLETION SCHEDULE AND COST

(a) **BPA Preferred Plan Projects**. Each Party acknowledges that, as of the Effective Date, the projected project completions schedule and capital costs of the BPA Preferred Plan Projects are as follows:

BPA Preferred Plan Project	Projected Completion	Projected Capital Cost
1. Covington 500 kV Transformer Addition Project	2018	$56.2 million
2. Northern Intertie RAS Improvement Project	2014	$4.0 million

(b) **Puget Preferred Plan Projects.** Each Party acknowledges that, as of the Effective Date, the projected project completions schedule and capital costs of the Puget Preferred Plan Projects are as follows:

Puget Preferred Plan Project	Projected Completion	Projected Capital Cost
1. Sammamish to Lakeside to Talbot Rebuild Project	2017	$45.0 million (single circuit) or $41.3 million (double circuit)
2. Lakeside 230 kV Transformer Addition Project	2017	$22.0 million

(c) **Seattle City Light Preferred Plan Projects.** Each Party acknowledges that, as of the Effective Date, the projected project completions schedule and capital costs of the Seattle City Light Preferred Plan Projects are as follows:

Seattle City Light Preferred Plan Project	Projected Completion	Projected Capital Cost
1. Bothell to SnoKing Reconductor Project	2017	$2.5 million
2. Broad Street Inductor Project	2017	$7.3 million*
3. North Downtown Inductor Project	2017	$4.4 million*
4. Delridge to Duwamish Reconductor Project	2016	$1.9 million

(d) **Preferred Plan Project Not Planned for Construction Based On the Construction of the Puget Preferred Plan Projects.** Each Party acknowledges that, the construction of the Puget Preferred Plan Projects negates the need for the construction of the Maple Valley to

* The projected capital costs of the Broad Street Inductor Project and the North Downtown Inductor Project do not reflect any projected costs for land acquisition. As of the Effective Date, the Parties acknowledge that Seattle City Light may have to acquire land to accomplish the Broad Street Inductor Project, and the actual capital costs of the Broad Street Inductor Project will, if necessary, reflect the actual costs of land acquisition for such project. As of the Effective Date, the Parties do not anticipate that the North Downtown Inductor Project will require Seattle City Light to acquire any land.

SnoKing Reconductor Project. Each Party acknowledges that, as of the Effective Date, the projected project completions schedule and capital costs of the Maple Valley to SnoKing Reconductor Project are as follows:

Preferred Plan Project	Projected Completion	Projected Capital Cost
Maple Valley to SnoKing Reconductor Project	N/A	$16.1 million

4. PRELIMINARY CAPITAL COST ALLOCATION

As of the Effective Date of this MOA, the Parties agree to share in the capital costs of Preferred Plan Projects as follows:

(a) **BPA Preferred Plan Projects**. BPA shall pay the entire actual capital cost of each of (i) the Covington 500 kV Transformer Addition Project and (ii) the Northern Intertie RAS Improvement Project

(b) **Seattle City Light Preferred Plan Projects.** BPA, Puget, and Seattle City Light shall each pay one-third of the total actual capital cost of each of (i) the Bothell to SnoKing Reconductor Project; (ii) the Delridge to Duwamish Reconductor Project; (iii) the Broad Street Inductor Project; and (iv) the North Downtown Inductor Project.

(c) **Puget Preferred Plan Projects.** BPA and Seattle City Light shall each pay to Puget an amount equal to one-third of the adjusted projected capital cost of the Maple Valley to SnoKing Reconductor Project, which adjusted projected capital cost shall be determined as provided in the following table:

Projected Capital Cost of the Maple Valley to SnoKing Reconductor Project	=	$16.1 million * Cost Differences in Reconductor Projects

where:

Cost Differences in Reconductor Projects	=	the quotient of

(i) the sum of the actual capital costs of the Delridge to Duwamish Reconductor Project and Bothell to SnoKing Reconductor Project and

(ii) the sum of the projected capital costs of the Delridge to Duwamish Reconductor Project and Bothell to SnoKing Reconductor Project identified in section 3(c) above (i.e., $4.4 million)

5. FINAL CAPITAL COST ALLOCATION AND OPTION OF ELECTION TO CANCEL

(a) The allocations identified in section 4 are based on preliminary planning capital cost projections. The final capital cost allocation for the Seattle City Light Preferred Plan Projects shall be based on actual design and construction capital costs for each of the Seattle City Light Preferred Plan Projects, and the final capital cost allocation for the Puget Preferred Plan Projects shall be in accordance with the formula proscribed in section 4(a) above. The Parties shall review such actual design and construction capital costs and schedules and shall agree in writing to the final capital cost allocation.

(b) Each Party reserves the right to cancel any Preferred Plan Project for which such Party is the sponsor if such Party determines that

(i) the actual capital cost of such Preferred Plan Project is likely to exceed the projected capital cost of such Preferred Plan Project by a factor that is equal to or in excess of thirty percent (30%), or

(ii) the projected in-service date of the Preferred Plan Project will be more than twenty-four (24) months later than the projected completion date identified in section 3 above for such Preferred Plan Project.

If a Party elects to cancel a Preferred Plan Project for which such Party is a sponsor under this section 5(b), such Party shall provide written notice to such other Parties within five (5) days of such election. Within a reasonable period of time after receipt of such written notice, representatives of the Parties shall convene and identify alternative projects that the Parties expect will preserve the reliable operation of the Puget Sound Area Interconnection and reduce the need to curtail firm transmission service in a manner similar to the project cancelled pursuant to section 5(b). If the Parties cannot agree in good faith upon an alternative project to replace a project cancelled pursuant to section 5(b) within a reasonable period following receipt of written notice of

such termination, then any Party may terminate this MOA upon 90 days' written notice to the other Parties.

6. RESPONSIBILITY FOR ALL OTHER COSTS

(a) Each Party shall be solely responsible for the Preferred Plan Project for which such Party is the sponsor, less the contributions from the other Parties as provided in section 4. This MOA only affects the cost sharing for the Preferred Plan Projects.

(b) Each Party shall own the assets for the Preferred Plan Project for which such Party is the sponsor and shall be solely responsible for the operation and maintenance costs of such assets. Each Party shall be entitled to any capacity increases to its transmission system that results from any assets installed pursuant to this MOA.

(c) If any Party enhances a Preferred Plan Project after completion of such Preferred Plan Project to meet such Party's needs, the cost of such future enhancements shall be borne solely by such Party. Each Party shall attempt in good faith to coordinate with the other Parties with respect to any future enhancements to a Preferred Plan Project to minimize or eliminate any impact to the interconnected electric systems of such other Parties.

7. PAYMENT SCHEDULE

Payments will be made at the completion of individual projects. The Parties shall agree in writing to the method and schedule for the cost share contributions to be made under this MOA.

8. NATIONAL ENVIRONMENTAL POLICY ACT ASSESSMENT

To the extent that BPA's financial contributions under this MOA are determined to trigger the need for analysis of projects under the National Environmental Policy Act, the Parties shall coordinate such assessment.

9. JOINT COMMUNICATIONS

The Parties shall coordinate joint communications regarding presentations of the preferred plan of service to the public.

10. GENERAL PROVISIONS

(a) This MOA, including documents expressly incorporated by reference, constitutes the entire agreement between the Parties. It supersedes all previous communications, representations, or contracts, either written or oral, which purport to describe or embody the subject matter of this MOA.

(b) No amendment of this MOA shall be of any force or effect unless set forth in a written instrument signed by authorized representatives of each Party.

(c) This MOA is made and entered into for the sole benefit of the Parties, and the Parties intend that no other person or entity shall be a direct or indirect beneficiary of this MOA.

(d) This MOA shall be interpreted consistent with and governed by federal law.

(e) In the event that any provision of this MOA is determined to be invalid or unenforceable for any reason, in whole or part, the remaining provisions of this MOA shall be unaffected thereby and shall remain in full force and effect to the fullest extent permitted by law, and such invalid or unenforceable provision shall be replaced by the Parties with a provision that is valid and enforceable and that comes closest to expressing the Parties' intention with respect to such invalid or unenforceable provision.

(f) Each Party shall be solely responsible for and shall pay its own costs and expenses incurred by it in connection with the negotiation of this MOA.

(g) Whenever this MOA requires or provides that (i) a notice be given by a Party to any other Party or (ii) a Party's action requires the approval or consent of any other Party, such notice, consent or approval shall be given in writing and shall be given in accordance with the provisions of Exhibit B to this MOA.

(h) This MOA is binding on any successors and assigns of the Parties. No Party may otherwise transfer or assign this MOA, in whole or in part, without the other Parties' written consent. Such consent shall not be unreasonably withheld.

(i) Nothing contained in this MOA shall be construed as creating a corporation, company, partnership, association, joint venture or other entity, nor shall anything contained in this MOA be construed as

creating or requiring any fiduciary relationship between the Parties. No Party shall be responsible hereunder for the acts or omissions of any other Party. Nothing herein shall preclude (i) a Party from taking any action (or having its affiliates take any action) with respect to any other transmission project, including any such project that may compete with the projects provided herein, or (ii) the Parties jointly from entering into MOAs with third parties for the joint development, construction, ownership or operation of any project or for the provision of transmission capacity from such project.

(j) Other than the obligation to pay amounts due under Section 4, in no event shall any Party be liable to any other Party under any provision of this MOA for any losses, damages, costs or expenses for any direct, special, indirect, incidental, consequential, or punitive damages, including but not limited to loss of profit or revenue, whether based in whole or in part in contract or in tort, including negligence, strict liability, or any other theory of liability; provided, however, that damages for which a Party may be liable to any other Party under another agreement will not be considered to be special, indirect, incidental, or consequential damages hereunder.

(k) The Parties shall not be in breach of their respective obligations to the extent the failure to fulfill any obligation is due to an Uncontrollable Force. "Uncontrollable Force" means an event beyond the reasonable control of, and without the fault or negligence of, the Party claiming the Uncontrollable Force, that prevents that Party from performing its contractual obligations under this MOA and which, by exercise of that party's reasonable care, diligence and foresight, such Party was unable to avoid. Uncontrollable Forces include, but are not limited to:

(1) strikes or work stoppage;

(2) floods, earthquakes, or other natural disasters; terrorist acts; and

(3) final orders or injunctions issued by a court or regulatory body having competent subject matter jurisdiction which the Party claiming the Uncontrollable Force, after diligent efforts, was unable to have stayed, suspended, or set aside pending review by a court of competent subject matter jurisdiction.

Neither the unavailability of funds or financing, nor conditions of national or local economies or markets shall be considered an Uncontrollable Force. The economic hardship of a Party shall not

constitute an Uncontrollable Force. Nothing contained in this provision shall be construed to require any Party to settle any strike or labor dispute in which it may be involved.

If an Uncontrollable Force prevents a Party from performing any of its obligations under this MOA, such party shall: (1) immediately notify the other Parties of such Uncontrollable Force by any means practicable and confirm such notice in writing as soon as reasonably practicable; (2) use its best efforts to mitigate the effects of such Uncontrollable Force, remedy its inability to perform, and resume full performance of its obligation hereunder as soon as reasonably practicable; (3) keep the other Parties apprised of such efforts on an ongoing basis; and (4) provide written notice of the resumption of performance. Written notices sent under this section 10(k) must comply with Exhibit B, Notices and Contact Information.

11. WAIVER

No waiver of any provision or breach of this MOA shall be effective unless such waiver is in writing and signed by the waiving Party, and any such waiver shall not be deemed a waiver of any other provision of this MOA or any other breach of this MOA.

12. SIGNATURE

The Parties have caused this MOA to be executed as of the latest date all Parties have signed this MOA.

CITY OF SEATTLE CITY LIGHT DEPARTMENT		UNITED STATES OF AMERICA Department of Energy Bonneville Power Administration	
By:	Jorge Carrasco	By:	Harder Juj
Name: *(Print/ Type)*	Jorge Carrasco	Name: *(Print/ Type)*	Harder Juj
Title:	Superintendent	Title:	VP, Planning + Asset Mgmt.
Date:	1/31/12	Date:	1/31/12

PUGET SOUND ENERGY, INC.

By: Susan McLain

Name: Susan McLain
(Print/ Type)

Title: Senior Vice President Delivery Operations

Date: 1/31/12

EXHIBIT A
PREFERRED PLAN OF SERVICE

EXHIBIT B
NOTICES

Any notice required under this MOA shall be in writing and shall be delivered in person; or with proof of receipt by a nationally recognized delivery service or by United States Certified Mail. Notices are effective when received. Either Party may change the name or address for receipt of notice by providing notice of such change. The Parties shall deliver notices to the following person and address:

If to Seattle City Light:

Attention:
Phone:
Fax:
Email:

If by First Class Mail:

City of Seattle, City Light Department
(Customer Address)
(Customer City, State, Zip)

If by Overnight Delivery Service:
City of Seattle, City Light Department
(Customer Address)
(Customer City, State, Zip)

If to BPA:

Attention:
Phone:
Fax:
Email:

If by First Class Mail:

Bonneville Power Administration
P.O. Box 61409
Vancouver, WA 98666-1409

If by Overnight Delivery Service:
Bonneville Power Administration – TSE/TPP-2
7500 NE 41st Street – Suite 130
Vancouver, WA 98662

If to the Puget:

Attention:
Phone:
Fax:
Email:

If by First Class Mail:

Puget Sound Energy, Inc.
P.O. Box 97034
Bellevue, WA 98009-9734

If by Overnight Delivery Service:
Puget Sound Energy, Inc.
10885 N.E. 4th Street, Suite 1100
Bellevue, WA 98004-5591

EXHIBIT A
PREFERRED PLAN OF SERVICE

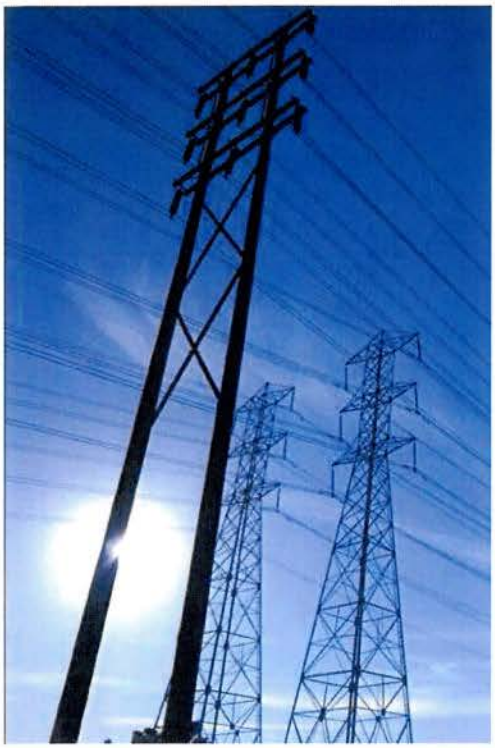

Updated Recommended Transmission Expansion Plan for the Puget Sound Area to Support Winter South-to-North Transfers

ColumbiaGrid

Puget Sound Area Study Team

Bonneville Power Administration, Puget Sound Energy, Seattle City Light, Snohomish County PUD, Tacoma Power, Powerex

Provisional Approval by the Study Team on April 25, 2011

Final Approval by the Study Team on October 28, 2011

Introduction and Conclusions

In October of 2010, the Puget Sound Area Study Team issued a report entitled "Transmission Expansion Plan for the Puget Sound Area." The report is available via the ColumbiaGrid website. The report details a transmission plan for the Puget Sound region that would, as a basic requirement, provides for reliable system performance while significantly improving the ability of the transmission grid to support power transfers between the Northwest and British Columbia. Since the release of the original report, the following changes have occurred that have led to the need for the Puget Sound Area Study Team to revise their transmission plan:

1) ***Additional scenarios*** – The Puget Sound area utilities have been meeting regularly since the publication of the original report in October 2010 and have developed several additional scenarios to be studied (e.g., the addition of a new Broad Street-Massachusetts 115 kV underground cable). In response, the study team repeated their prior analysis for the critical winter south-to-north condition for the new scenarios. The results of this analysis are shown in the table provided in Appendix A.

2) ***Increased likelihood that Puget Sound Energy will move forward with Sammamish-Lakeside-Talbot project*** – Since the development of the original plan, Puget Sound Energy has further developed their plan to rebuild two 115 kV lines to 230 kV (Sammamish-Lakeside-Talbot #1 and #2) and provide new 230/115 kV transformation at their Lakeside Substation. Although both lines will be rebuilt, only one of the lines may be initially energized at 230 kV. As stated in the prior report, this facility addition can delay the need to reconductor the Maple Valley-SnoKing 230 kV lines beyond the ten-year transmission planning horizon.

   The study team decided that since Puget Sound Energy is moving forward with this plan, the Sammamish-Lakeside-Talbot project should be listed as the proposed project in the plan instead of the Maple Valley-SnoKing reconductor. This project will give Puget Sound Energy the ability to provide necessary load support at Lakeside which cannot be achieved with the Maple Valley-SnoKing reconductor project, while providing similar Transmission Curtailment Risk Measure (TCRM) benefits as the Maple Valley-SnoKing reconductor project. A downside of the Sammamish-Lakeside-Talbot project is that its south-to-north Total Transfer Capability (TTC) is lower as compared to the Maple Valley-SnoKing reconductor. However, the Sammamish-Lakeside-Talbot project has additional benefits over the Maple Valley-SnoKing reconductor project in that it provides an additional 230 kV transmission path through the Puget Sound area and makes it feasible to reconductor rather than rebuild the Bothell-SnoKing 230 kV lines.

3) ***Increased likelihood that Seattle City Light will move forward with their North Downtown Substation Project*** – Since the development of the plan, Seattle City Light has indicated that plans to add a new North Downtown Substation have become more likely. The final plan is still being developed by SCL. The option studied includes a new underground cable (North Downtown-Massachusetts 230 kV), a new 115 kV line between North Downtown and Canal, and two 230/115 kV transformers at the proposed substation (see the following Figure One). This project was studied in the prior plan and, as identified previously, a third set of series inductors will be required on the new Canal-North Downtown 115 kV line with the addition of the North Downtown Substation. The plan for the system without, or prior to, the addition of the North Downtown Substation remains the same (adding series inductors on the two 115 kV underground cables). There is not a significant impact on the plan with or without the North Downtown Substation project as long as the project includes a third set of series inductors on the new North Downtown-Canal 115 kV line.

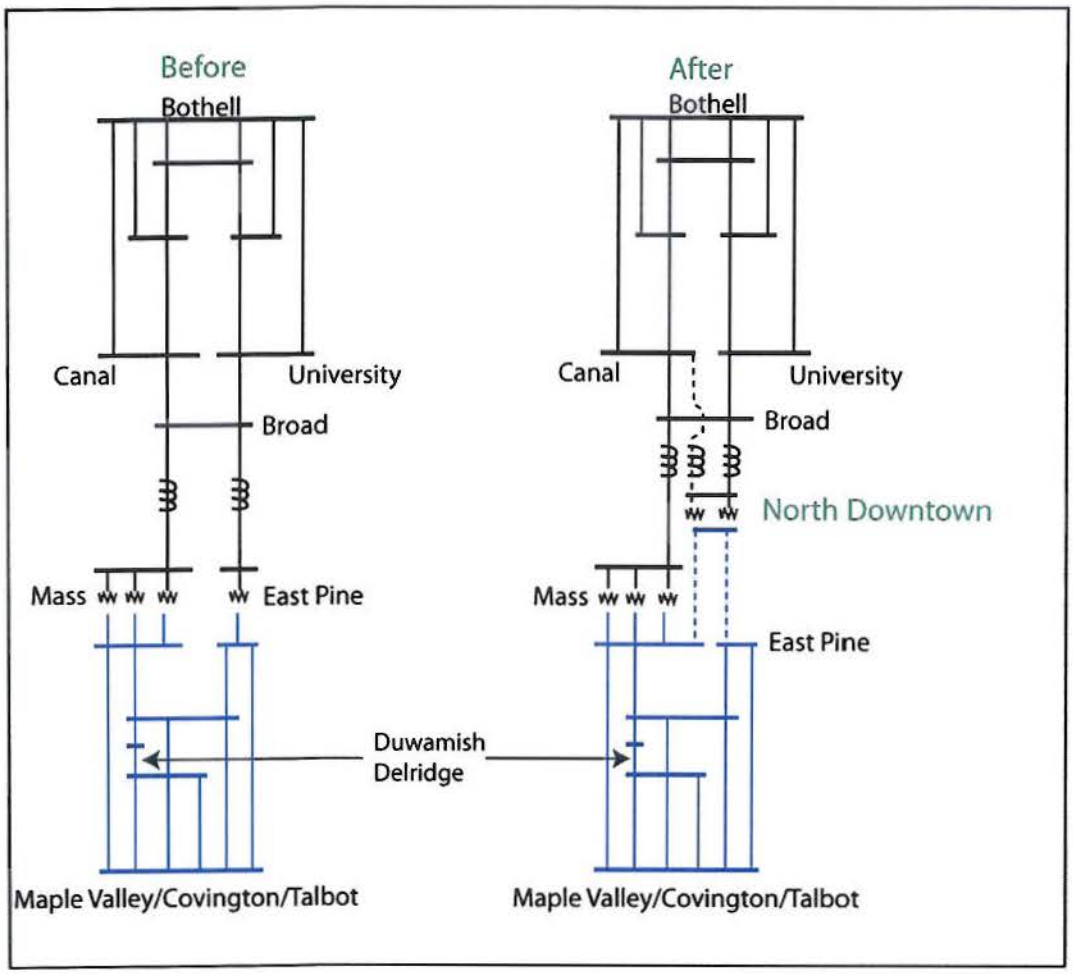

Figure One: One-Line Diagram with the proposed locations of the series inductor additions, before and after the Seattle City Light North Downtown Substation Project.

4) ***Seattle area line rating increases*** – Several key transmission lines in the region have been rerated to a higher capability. In some cases the new ratings provide a 77% increase over the ratings that were utilized in the original study. This has enabled the study team to reduce the size of the series inductors (from 26 ohms to 6 ohms) that were proposed for the Seattle City Light 115 kV transmission lines and cables. The smaller inductors lead to more power flowing through the Seattle City Light system resulting in the need to include an additional facility reconductor in the plan; the Duwamish-Delridge 230 kV line. The cost of this additional reconductor is estimated to be relatively low ($1.6 million). This additional cost is projected to be partially offset by the savings achieved by the installation of smaller inductors. The smaller inductors also reduce the need to add shunt capacitors to offset the reactive losses from the larger sized inductors.

5) ***Seattle City Light Update to TPS Settings*** - Seattle City Light has recently updated the TPS settings which have resulted in operational changes that preclude it from being used as a project in this study to reduce TCRM and increase TTC levels on the northern intertie. All results that use the previous scheme have not been included in this report.

As a result of the above changes, the plan to support south-to-north transfers has been revised as specified in this report. Additional transmission facilities, such as a second Portal Way 230/115 kV transformer, will likely be necessary to support north-to-south transfers. These additional facilities will be further analyzed in subsequent studies.

Overview of Revised Plan

As a result of the above changes, the Transmission Expansion Plan for the Puget Sound Area was revised and the new plan is shown in the following Figure Two:

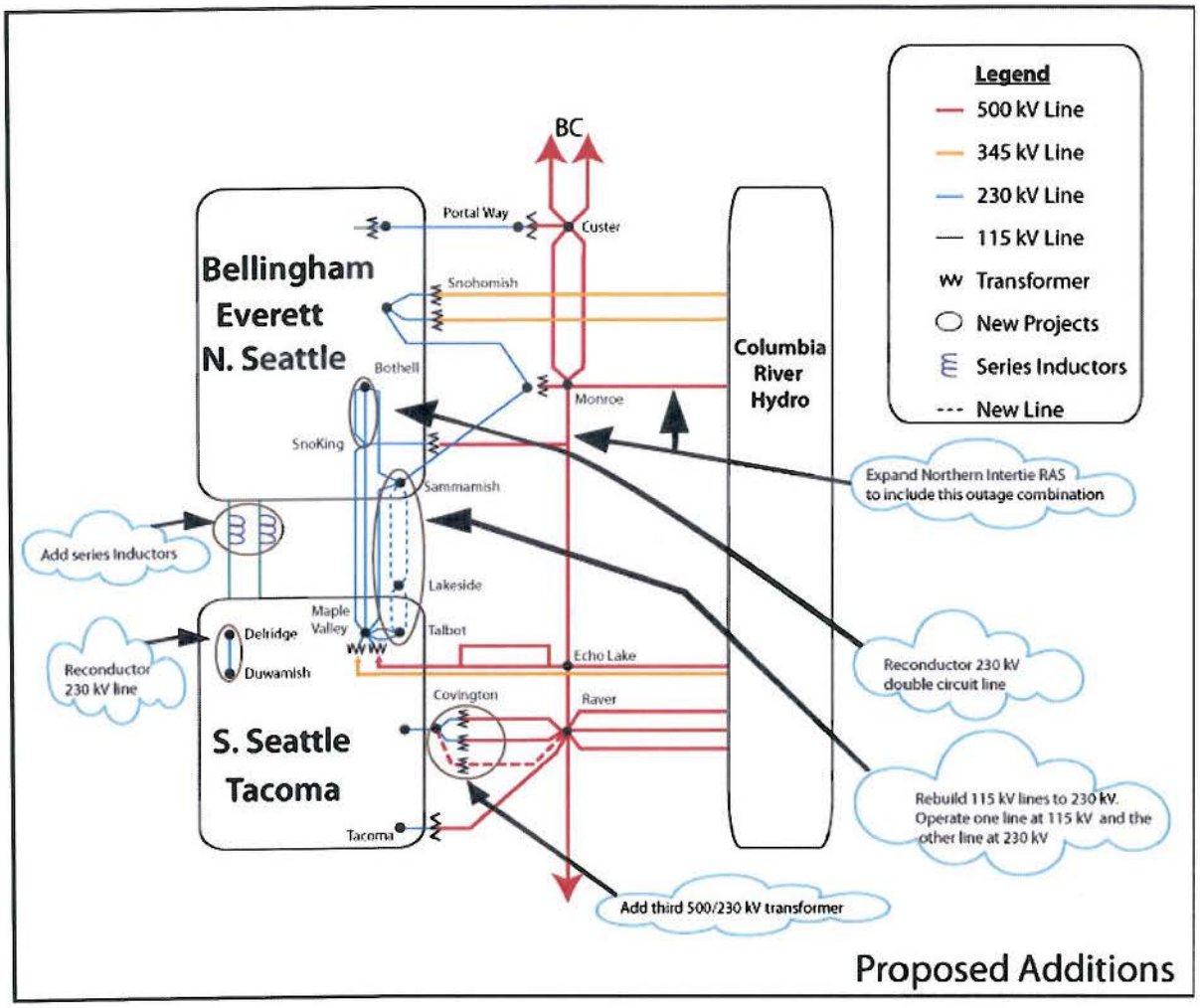

Figure Two: Revised Puget Sound Area Transmission Expansion Plan for Supporting South-to-North Transfers

Projects included in the Puget Sound Area Transmission Expansion Plan to support south-to-north transfers are:

- Reconductor the double circuit Bothell-SnoKing 230 kV lines with high temperature conductor
- Expand the Northern Intertie RAS
- Add a third Covington 500/230 kV transformer
- Reconductor the Delridge-Duwamish 230 kV line
- Add series inductors to the Massachusetts-Union-Broad and East Pine-Broad 115 kV lines in the downtown Seattle system. The final inductor size is under study and may vary from the 6 ohms specified in this report. Each line may have a different inductor size to optimize the system.
- Rebuild both the Sammamish-Lakeside-Talbot 115 kV lines to 230 kV. Energize one line at 230 kV and the other at 115 kV.

The cost estimates for the project in the preferred plan are shown in the following table. It should be noted that portions of the projects may be planned for local utility service and may not be necessary to accomplish the transfer capability goals of this study.

PSAST Preferred South-to-North Plan Cost Estimate	
	Cost Estimate (M)
Reconductor Bothell-SnoKing 230kV #1 & #2 with high temperature conductor	$3
Extend the Northern Intertie RAS to trip for the combined outage of the Chief Joseph-Monroe and Monroe-SnoKing-Echo Lake 500 kV lines	$3
Add a third Covington 500/230 kV transformer, a 500 kV terminal at Raver for the third Raver-Covington 500 kV line, and a 500 kV Bus at Covington	$60
Reconductor Delridge - Duwamish 230 kV Line with high temperature conductor	$2
6 ohm inductors on the two 115 kV cables out of SCL's Broad Street Substation	$13
Lakeside 230/115 kV transformer, rebuild both 115 kV Sammamish – Talbot lines to 230 kV energizing one line at 230 kV	$65
Total Preferred Projects	$146

* The majority of these estimates are preliminary estimates. More detailed estimates will be developed by the Puget Sound Area utilities.

Next Steps

Now that the overall south-to-north plan is complete, the individual transmission owners need to identify the parties responsible for each of the projects and agree on the cost allocation for the projects. After this has been completed, detailed feasibility studies, cost estimates, project timing, and schedules will be completed. In addition, the following project specific studies will be completed by the Puget Sound Area Study Team:

- North-to-South transfer conditions will be studied to determine the effect that the new preferred plan has on transfer capability and to determine if any additional projects are needed.
- Series Inductor Project: Studies need to be completed to determine the proper size for the series inductors, the impact on north-to-south transfers, and the preferred switching arrangement.
- Determine how long the proposed plan will last. The PSAST will grow the Northwest loads in the current 2020 base case to 2025 and 2030 load levels. The additional load will be served by eastern resources. TCRM and TTC values will be calculated to determine whether they may degrade over time.
- Northern Intertie RAS Expansion Project: The Puget Sound Area Study Team will be available to assist BPA and BC Hydro with any additional studies necessary to implement this RAS expansion.
- Covington Transformer Project: Additional studies will be completed by BPA, to further analyze alternative locations for this transformer addition, the need for a 500 kV switchyard at Covington, potential operational solutions, potential remedial action schemes, the size of the transformer, the impedance of the transformer, and the preferred connection to the 230 kV bus. The BPA studies will be coordinated with area utilities through the Puget Sound Area Study Team.

While the projects identified in this report improve the transfer capability through the Puget Sound Area, there remain curtailment risks for firm transfers during outage conditions (N-1-X). Consequently, the Puget Sound Area Study Team will continue to investigate cost effective ways to reduce the risk of firm curtailments.

Study Results

New winter south-to-north studies were completed for a variety of scenarios and the detailed study results are provided in Appendix A. The system performance for each scenario was compared using the following two measures in addition to cost and permitting feasibility:

1) ***Transmission Curtailment Risk Measure (TCRM):*** TCRM is a measure of the likelihood of experiencing curtailments of transfers between the Northwest and British Columbia. The higher the TCRM value the greater the exposure to curtailments. The TCRM analysis

includes the cases with all facilities in service as well as with any single facility out of service. A detailed description of the TCRM methodology is provided in the original report. In the original report, winter and summer conditions for both north-to-south and south-to-north transfers were studied. For this update, only winter conditions with south-to-north transfers were studied as that is the critical system state for the alternatives presented in this report.

2) ***Total Transfer Capability (TTC):*** The TTC (thermal only) of the Westside Northern Intertie (WSNI) was calculated for each of the options in the traditional way, with all lines in service. Only the winter south-to-north condition was studied, with 680 MW of generation operating in the Puget Sound Area. The specific generation unit assumptions are as described in Appendix J of the original report. Puget Sound Area generation during winter peak is between 950 MW and 1550 MW 80% of the time (when load has been greater than 6000MW along with temperature below 32 degrees F). With higher levels of Puget Sound Area generation, the TTC numbers shown in the tables would likely increase.

The major issues addressed in this study are the impacts of the various alternatives on the 115 kV system in the Seattle area, and the impacts of the various alternatives on the 230 kV system between the Maple Valley and SnoKing areas. In all cases, the other major projects as described in the original report are modeled, which include the Northern Intertie RAS expansion, third Covington transformer, and second Portal Way transformer. In addition, the Bothell-SnoKing rebuild project was included in most scenarios although sensitivity studies were conducted for the reconductor option which ended up being the preferred option. Provided below is a discussion of each of the major issues addressed by the study team and their conclusions.

1) 26 ohm versus 6 ohm series inductors

Table 1: Selected TCRM and TTC Results, 26 ohm inductors vs. 6 ohm inductors

Study #	Series Inductors on SCL's 115 kV Cables- 26 ohms	Series Inductors on SCL's 115 kV Cables- 6 ohms	Maple Valley-SnoKing High Temp	PSE's Sammamish - Lakeside - Talbot 115kV to 230kV Upgrade Project (Two Lines Operated at 230 kV)	Total TCRM - Without TCRM Lines Outside of the Puget Sound Area	Winter South North WSNI Thermal TTC at 680 MW Puget Sound Generation
3	X		X		10,304	2,270
4		X	X		8,433	2,297
17	X			X	10,460	1,773
18		X		X	8,666	2,038

With the changes in 115 kV line ratings, the Seattle 115 kV system is capable of accommodating greater flows. As a result, using a series inductor impedance greater than 6 ohms is no longer necessary to reduce the loadings on the Seattle 115 kV system. In fact, the TCRM is slightly better (lower) with the smaller 6 ohm inductors. Prior studies have also indicated that the smaller inductor size provided better results for summer north-to-south conditions. Higher impedance inductors also would have the undesirable effect of pushing more power over to the Maple Valley-SnoKing lines and reducing the TTC. In addition the smaller inductors require the addition of fewer shunt capacitors to offset the reactive losses from the inductors. The 6 ohm inductors have the effect of adding a circuit reactance that is equivalent to 8 miles of overhead 115 kV line. The 6 ohm inductors are now the preferred 115 kV project due to better performance and lower cost.

2) 6 ohm series inductors versus phase shifting transformers

Table 2: 6 ohm series inductors versus phase shifting transformers

Study #	SCL Phase Shifting Transformer	Series Inductors on SCL's 115 kV Cables- 6 ohms	Maple Valley-SnoKing High Temp	PSE's Sammamish - Lakeside - Talbot 115kV to 230kV Upgrade Project (Two Lines Operated at 230 kV)	Total TCRM - Without TCRM Lines Outside of the Puget Sound Area	Winter South North WSNI Thermal TTC at 680 MW Puget Sound Generation
1	X		X		13,122	2,455
4		X	X		8,433	2,297
15	X			X	11,500	2,136
18		X		X	8,666	2,038

The TCRM studies for the phase shifting transformer project may not reflect the true performance of this project due to the difficulty of accurately modeling the phase shifting transformer operating strategy. As a result, while the TCRM studies show poorer performance for the phase shifting transformers than for the series inductor project, the study team believes that this result is a shortcoming of the phase shifter modeling and, in fact, the phase shifters should perform as well or better than the series inductors. This was the conclusion of the TTC studies, where a benefit was observed when using the phase shifting transformers instead of fixed series inductors. However, as the incremental benefits are not believed to be sufficient to justify the higher capital and maintenance costs of the phase shifter option, the 6 ohm series inductors remain the recommended project.

3) 6 ohm series inductors versus adding a third 115 kV cable

Table 3: 6 ohm inductor versus adding a third 115 kV cable

Study #	Series Inductors on SCL's 115 kV Cables- 6 ohms	3rd 115 kV Underground Cable from Mass to Broad Street & Mass Bank 1 Energized	Maple Valley-SnoKing High Temp	PSE's Sammamish - Lakeside - Talbot 115kV to 230kV Upgrade Project (Two Lines Operated at 230 kV)	Total TCRM - Without TCRM Lines Outside of the Puget Sound Area	Winter South North WSNI Thermal TTC at 680 MW Puget Sound Generation
4	X		X		8,433	2,297
5		X	X		19,027	1,513
18	X			X	8,666	2,038
19		X		X	11,213	2,297

This option examines adding a third Seattle City Light 115 kV underground cable (a second cable from Broad Street to Massachusetts) in place of the 6 ohm inductors. The results for this alternative vary depending on whether the Sammamish-Lakeside-Talbot lines are upgraded to 230 kV or the Maple Valley-SnoKing lines are reconductored. With the preferred plan (upgrading the Sammamish-Lakeside-Talbot lines to 230 kV), there is a benefit to the alternative of adding a third cable from a TTC perspective and a slight benefit to the series inductor option from the TCRM perspective. Conversely, if the Maple Valley-SnoKing reconductor project moves forward, the series inductor option performs better from both a TCRM and TTC perspective. This is because if a third cable is added, there is still a need for the series inductors to eliminate overloading on the Broad Street-East Pine 115 kV cable, the East Pine-Maple Valley 230 kV line, and the Massachusetts 230/115 kV transformers. The third cable option is deemed to be less preferable to the recommended option primarily because the cost of the third cable is expected to far exceed the cost of the series inductors. In addition, the construction of an additional Broad-Massachusetts 115 kV cable is incompatible with Seattle City Light's future plan to add a new 230 kV cable as part of their North Downtown Substation

Project (North Downtown-Massachusetts 230 kV). The 6 ohm series inductors remain the preferred project due to better performance and lower cost.

4) ***6 Ohm Series inductors versus replacing cables***

Table 4: 6 ohm inductors versus replacing cables

Study #	Series Inductors on SCL's 115 kV Cables- 6 ohms	Replace SCL's Existing 115 kV Cables (no inductors)	Maple Valley-SnoKing High Temp	PSE's Sammamish - Lakeside - Talbot 115kV to 230kV Upgrade Project (Two Lines Operated at 230 kV)	Total TCRM - Without TCRM Lines Outside of the Puget Sound Area	Winter South North WSNI Thermal TTC at 680 MW Puget Sound Generation
4	X		X		8,433	2,297
6		X	X		19,398	1,602
18	X			X	8,666	2,038
20		X		X	11,746	2,210

If the 6 ohm inductors are in place, potential overloading on the cables is no longer an issue so rebuilding the cables would have no benefit. This option examines rebuilding the cables in lieu of the 6 ohm inductors. The results for this alternative vary depending on whether the Sammamish-Lakeside-Talbot lines are upgraded to 230 kV or the Maple Valley-SnoKing lines are reconductored. With the preferred plan (upgrading the Sammamish-Lakeside-Talbot lines to 230 kV), the series inductors perform better from a TCRM perspective and slightly worse from a TTC perspective. If the Maple Valley-SnoKing reconductor project moves forward then the series inductor option performs better from both a TCRM and TTC perspective. The TCRM performance is better for the series inductor options because if the cables are replaced, there would be other limits reached on the downtown Seattle system. The additional limits reached that account for most of the TCRM increase include the East Pine 230/115 kV transformer and the Massachusetts 230/115 kV transformers. The series inductors remain the preferred project due to better performance and lower cost.

5) 6 ohm *series inductors versus the Seattle City Light North Downtown Substation project with and without series inductors*

Table 5: 6 ohm inductors versus the Seattle City Light North Downtown Substation project with and without series inductors

Study #	Series Inductors on SCL's 115 kV Cables- 6 ohms	SCL's North Downtown Substation	SCL's North Downtown Substation (6 ohm inductors)	Maple Valley-SnoKing High Temp	PSE's Sammamish - Lakeside - Talbot 115kV to 230kV Upgrade Project (Two Lines Operated at 230 kV)	Total TCRM - Without TCRM Lines Outside of the Puget Sound Area	Winter South North WSNI Thermal TTC at 680 MW Puget Sound Generation
4	X			X		8,433	2,297
32		X		X		117,049	-1,380
36			X	X		8,778	2,672
18	X				X	8,666	2,038
34		X			X	38,594	-832
38			X		X	9,101	2,207

The study results indicate that the TCRM would increase dramatically and the TTC would be negative (not capable of south-to-north transfers) unless the series inductors are included in the plans for the new North Downtown Substation. The majority of this increase is due to overloading on the Broad-North Downtown 115 kV cable. As a result, the series inductors are needed before and after the addition of the North Downtown Substation Project.

6) **6 ohm series inductors:** ***Reinforcing Maple Valley–SnoKing 230 kV lines versus options to upgrade Sammamish-Lakeside-Talbot 115 kV lines versus Monroe-Echo Lake #2***

Table 6: 6 ohm inductors – Reinforcing Maple Valley–SnoKing 230 kV lines versus options to upgrade Sammamish-Lakeside-Talbot 115 kV lines versus Monroe-Echo Lake #2

Study #	Series Inductors on SCL's 115 kV Cables- 6 ohms	Maple Valley-SnoKing High Temp	Maple Valley-SnoKing Rebuild	PSE's Sammamish - Lakeside - Talbot 115kV to 230kV Upgrade Project (Two Lines Operated at 230 kV)	PSE's Sammamish - Lakeside - Talbot 115kV to 230kV Upgrade Project (One Line Operated at 230 kV)	Monroe-Echo Lake #2 500kV	Total TCRM - Without TCRM Lines Outside of the Puget Sound Area	Winter South North WSNI Thermal TTC at 680 MW Puget Sound Generation
4	X	X					8,433	2,297
11	X		X				7,623	2,632
18	X			X			8,666	2,038
28	X	X		X			9,003	2,700
81	X				X		13,422	1,643
80	X					X	5,047	2,875

The lowest TCRM and the highest TTC for line improvements east of Lake Washington can be achieved by building the Monroe-Echo Lake #2 500 kV line in addition to the 6 ohm series inductors. Unfortunately, this is also the highest cost transmission option.

From a TCRM perspective there is little difference between the Maple Valley – SnoKing reinforcement options and the Sammamish – Lakeside – Talbot upgrade project with two lines operated at 230 kV although the Maple Valley-SnoKing rebuild option performs slightly better than the others. From a TTC perspective, there is an advantage for the Maple Valley-SnoKing options; particularly the rebuild option. However, this was not deemed to be a sufficient advantage over the preferred Sammamish-Lakeside-Talbot 230 kV upgrade project with two lines operated at 230 kV. A major benefit of the Sammamish-Lakeside-Talbot options is that

they would provide necessary load service to Lakeside Substation which the Maple Valley-SnoKing options would not. Pursuing the Sammamish-Lakeside-Talbot options at this time does not preclude reconductoring the Maple Valley-SnoKing lines at a later time.

The Sammamish – Lakeside – Talbot upgrade project can defer some of its substation construction costs by initially upgrading the 115 kV lines to 230 kV and operating one line at 115 kV and one line at 230 kV. This option did not perform as well as operating both lines at 230 kV for both TCRM and TTC. The reduction in performance has been deemed acceptable for the cost savings. The second line planned to be cut-over to 230 kV operation at a later date.

7) **6 ohm series inductors and Sammamish-Lakeside-Talbot upgrade:** ***Bothell-SnoKing rebuild versus reconductor***

Table 7: 6 ohm series inductors and Sammamish-Lakeside-Talbot upgrade: Bothell-SnoKing rebuild versus reconductor

Study #	Series Inductors on SCL's 115 kV Cables- 6 ohms	PSE's Sammamish - Lakeside - Talbot 115kV to 230kV Upgrade Project (Two Lines Operated at 230 kV)	PSE's Sammamish - Lakeside - Talbot 115kV to 230kV Upgrade Project (One Line Operated at 230 kV)	Bothell - SnoKing Rebuild	Bothell - SnoKing High Temp Instead of Rebuild	Total TCRM - Without TCRM Lines Outside of the Puget Sound Area	Winter South North WSNI Thermal TTC at 680 MW Puget Sound Generation
18	X	X		X		8,666	2,038
47	X	X			X	9,512	2,086
81	X		X	X		13,422	1,643
82	X		X		X	13,663	1,677

For either Sammamish – Lakeside – Talbot upgrade option the TCRM and TTC results are similar for the Bothell-SnoKing rebuild and reconductoring options. The reconductor of the Bothell-SnoKing lines would provide acceptable performance at a lower cost with minimal permitting and mitigation requirements.

Appendix A

Table of TCRM and TTC Results

ColumbiaGrid PSAST Options for N-1-X TCRM Determination

	115 kV Reinforcement Options									230 kV & 500 kV Reinforcement Options							TCRM & TTC Values		
Study #	SCL Phase Shifting Transformer	Series Inductors on SCL's 115 kV Cables- 26 ohms	Series Inductors on SCL's 115 kV Cables- 6 ohms	3rd 115 kV Underground Cable from Mass to Broad Street & Mass Bank 1 Energized	Replace SCL's Existing 115 kV Cables (no inductors)	Replace SCL's Existing 115 kV Cables (6 ohm inductors)	SCL's North Downtown Substation	SCL's North Downtown Substation (6 ohm inductors)	Maple Valley-SnoKing High Temp	Maple Valley-SnoKing Rebuild	PSE's Sammamish - Lakeside - Talbot 115kV to 230kV Upgrade Project (Two Lines Operated at 230 kV)	PSE's Sammamish - Lakeside - Talbot 115kV to 230kV Upgrade Project (One Line Operated at 230 kV)	Monroe-Echo Lake #2 500kV	Bothell - SnoKing High Temp Instead of Rebuild	With Covington, Portalway, Extended RAS, Bothell - SnoKing Upgrade	Total TCRM - Without TCRM Lines Outside of the Puget Sound Area	TTC (Thermal Only)	Notes
54																308,343	-	PSAST 2020 Winter South-to-North Expansion Plan Base Case
24															X	73,898	920	
1	X								X						X	13,122	2455	
3		X							X						X	10,304	2270	
4			X						X						X	8,433	2297	
5				X					X						X	19,027	1513	
6					X				X						X	19,398	1602	
7						X			X						X	8,258	2448	
32							X		X						X	117,049	-1380	
36								X	X						X	8,778	2672	
8	X									X					X	14,039	2692	
10		X								X					X	12,659	2652	
11			X							X					X	7,623	2632	
12				X						X					X	13,172	1820	
13					X					X					X	13,012	2120	
14						X				X					X	7,423	2664	
33							X			X					X	82,697	-1350	
37								X		X					X	7,111	2708	
15	X										X				X	11,500	2136	
17		X									X				X	10,460	1773	
18			X								X				X	8,666	2038	
81			X									X			X	13,422	1643	
47			X								X			X	X	9,512	2086	
82			X									X		X	X	13,663	1677	Preferred Plan
19				X							X				X	11,213	2297	
20					X						X				X	11,746	2210	
21						X					X				X	8,666	2044	
34							X				X				X	38,594	-832	
38								X			X				X	9,101	2207	
49								X			X			X	X	10,286	2233	
25	X								X		X				X	9,664	2745	
27		X							X		X				X	9,288	2497	
28			X						X		X				X	9,003	2700	
29				X					X		X				X	11,460	2305	
30					X				X		X				X	12,395	2377	
31						X			X		X				X	9,003	2700	
35							X		X		X				X	38,463	-804	
39								X	X		X				X	9,296	2732	
56								X	X		X			X	X	10,285	2753	
22													X		X	13,501	2104	
40							X						X		X	46,466	-292	
41								X					X		X	4,143	2916	
80			X										X		X	5,047	2875	

EXHIBIT B
NOTICES

Any notice required under this MOA shall be in writing and shall be delivered in person; or with proof of receipt by a nationally recognized delivery service or by United States Certified Mail. Notices are effective when received. Either Party may change the name or address for receipt of notice by providing notice of such change. The Parties shall deliver notices to the following person and address:

If to Seattle City Light:

Attention:
Phone:
Fax:
Email:

If by First Class Mail:

City of Seattle, City Light Department
(Customer Address)
(Customer City, State, Zip)

If by Overnight Delivery Service:
City of Seattle, City Light Department
(Customer Address)
(Customer City, State, Zip)

If to BPA:

Attention:
Phone:
Fax:
Email:

If by First Class Mail:

Bonneville Power Administration
P.O. Box 61409
Vancouver, WA 98666-1409

If by Overnight Delivery Service:
Bonneville Power Administration – TSE/TPP-2
7500 NE 41st Street – Suite 130
Vancouver, WA 98662

If to the Puget:

Attention:
Phone:
Fax:
Email:

If by First Class Mail:

Puget Sound Energy, Inc.
P.O. Box 97034
Bellevue, WA 98009-9734

If by Overnight Delivery Service:
Puget Sound Energy, Inc.
10885 N.E. 4th Street, Suite 1100
Bellevue, WA 98004-5591

Department of Energy

Bonneville Power Administration
P.O. Box 61409
Vancouver, WA 98666-1409

TRANSMISSION SERVICES

July 22, 2014

In reply refer to: TSE/TPP-2

Contract No. 14TX-16053
Letter Agreement

Ms. Booga Gilbertson
Vice President, Operations Services
Puget Sound Energy, Inc.
10885 NE 4th Street, PSE – 11S
Bellevue, WA 98004

Mr. Phillip West
Customer Service Energy Officer
City of Seattle, City Light Department
700 Fifth Avenue, Suite 2822
Seattle, WA 98104-5031

Dear Ms. Gilbertson and Mr. West:

The Bonneville Power Administration (BPA), Puget Sound Energy, Inc, (PSE) and City of Seattle, City Light Department (SCL) are parties to the Memorandum of Agreement (MOA), Contract No. 11TX-15450, relating to the Preferred Puget Sound Area Plan of Service Projects and Cost Allocation. The parties to the MOA are currently in the initial stages of development of the projects described in the MOA. As this has progressed, certain aspects of the MOA were identified that the parties believe need to be clarified.

This Agreement is intended to clarify the scope changes related to the Covington 500 kV Transformer Addition Project described in Section 3(a) of the MOA and the Bothell to SnoKing Reconductor Project described in Section 3(c) of the MOA.

BPA's transformer addition originally planned for Covington Substation has been moved to Raver Substation. There is no change in financial responsibility under the MOA due to this relocation.

The Bothell to SnoKing Reconductor Project was identified in the MOA as an SCL project. However, during subsequent discussions it was discovered that BPA owns the first ½ mile of these lines on the SnoKing end. BPA will rebuild its owned portion of these lines at its cost, including any necessary replacement of equipment within SnoKing Substation associated with these lines.

In order to meet the project schedule, please sign all originals of this Agreement, retain one original for your records and return the remaining two originals to my attention at one of the following addresses at your earliest convenience, but not later than Close of Business on August 30, 2014:

First Class Mail	Overnight Delivery Service
Bonneville Power Administration Mail Stop: TSE/TPP-2 P.O. Box 61409 Vancouver, WA 98666-1409	Bonneville Power Administration Mail Stop: TSE/TPP-2 7500 NE 41st Street – Suite 130 Vancouver, WA 98662

BPA will ensure that Puget and SCL have a full set of original signature pages.

If you have any questions, please call me at (360) 619-6015.

Sincerely,

Toni L. Timberman
Senior Transmission Account Executive
Transmission Sales

CONCUR:

PUGET SOUND ENERGY, INC.

By: _____

Name: _____
(Print/Type)

Title: _____

Date: _____

CITY OF SEATTLE,
CITY LIGHT DEPARTMENT

By: _____

Name: _____
(Print/Type)

Title: _____

Date: _____

bcc:
C. Olsen– KSC-TPP-1
B. Bennett – LT-7
J. Weiss – TPCV/COVINGTON
T. Timberman – TSE/TPP-2
P. Gibson – TSES/TPP-2
Customer File – TS/-TPP-2 (TM-11, Puget Sound Energy, Inc.)
Customer File – TSE/TPP-2 (TM-11, City of Seattle, City Light Department.)
Official File – CCM Support

(W:\CT\Puget Sound Energy, Inc\Drafts\16053_PSE-SCL-PSANI MOA SCOPE CHANGE LTR AGMT.Doc)

Department of Energy

Bonneville Power Administration
P.O. Box 61409
Vancouver, WA 98666-1409

TRANSMISSION SERVICES

August XX, 2014

In reply refer to: TSE/TPP-2

Contract No. 14TX-16054
Letter Agreement

Ms. Booga Gilbertson, Vice President,
Operations Services
Puget Sound Energy, Inc.
10885 NE 4th Street, PSE – 11S
Bellevue, WA 98004

Dear Ms. Gilbertson:

The Bonneville Power Administration (BPA), Puget Sound Energy, Inc, (PSE) and City of Seattle, City Light Department (SCL) are parties to the Memorandum of Agreement (MOA), Contract No. 11TX-15450, relating to the Preferred Puget Sound Area Plan of Service Projects and Cost Allocation. The parties to the MOA are currently in the initial stages of development of the projects described in the MOA. As this has progressed, certain aspects of the MOA were identified that the parties believe need to be clarified.

This Agreement is intended to clarify the use of BPA funds contributed toward the adjusted projected capital cost of the Puget Preferred Plan Projects described in Sections 4(c) and 5(a) of the MOA.

The parties acknowledge that BPA is not involved in any manner or capacity in PSE's Sammamish to Lakeside to Talbot Rebuild Project and agree that no BPA funds provided under the MOA will be allocated to PSE's Sammamish to Lakeside to Talbot Rebuild Project. Instead, all BPA funds under the MOA will be allocated to PSE's Lakeside 230 kV Transformer Addition Project as well as the other BPA and SCL Preferred Plan Projects identified in the MOA.

In order to meet the project schedule, please sign both originals of this Agreement, retain one original for your records and return the remaining original to my attention at one of the following addresses at your earliest convenience, but not later than Close of Business on
August 30, 2014:

<u>First Class Mail</u>

Bonneville Power Administration
Mail Stop: TSE/TPP-2
P.O. Box 61409
Vancouver, WA 98666-1409

<u>Overnight Delivery Service</u>

Bonneville Power Administration
Mail Stop: TSE/TPP-2
7500 NE 41st Street – Suite 130
Vancouver, WA 98662

If you have any questions, please call me at (360) 619-6015.

Sincerely,

Toni L. Timberman
Senior Transmission Account Executive
Transmission Sales

CONCUR:

PUGET SOUND ENERGY, INC.

By: _____

Name: _____
(Print/Type)

Title: _____

Date: _____

bcc:

C. Olsen– KSC-TPP-1
B. Bennett – LT-7
J. Weiss – TPCV/COVINGTON
T. Timberman – TSE/TPP-2
P. Gibson – TSES/TPP-2
Customer File – TS/-TPP-2 (TM-11, Puget Sound Energy, Inc.)
Customer File – TSE/TPP-2 (TM-11, City of Seattle, City Light Department.)
Official File – CCM Support

(W:\CT\Puget Sound Energy, Inc\Drafts\16054_PSE_USE OF FUNDS.Doc)

Department of Energy

Bonneville Power Administration
P.O. Box 61409
Vancouver, WA 98666-1409

TRANSMISSION SERVICES

August XX, 2014

In reply refer to: TSE/TPP-2

Contract No. 14TX-16060
Letter Agreement

Ms. Booga Gilbertson
Vice President Operations Services
Puget Sound Energy, Inc.
P.O. Box 90868
Bellevue, WA 98009-0868

Mr. Phillip West
Customer Service Energy Officer
City of Seattle, City Light Department
700 Fifth Ave., Suite 2822
Seattle, WA 98104-5031

Dear Ms. Gilbertson and Mr. West:

The Bonneville Power Administration (BPA), Puget Sound Energy, Inc., (PSE) and City of Seattle, City Light Department (SCL) are parties to the Memorandum of Agreement (MOA), Contract No. 11TX-15450, relating to the Preferred Puget Sound Area Plan of Service Projects and Cost Allocation. The parties to the MOA are currently in the initial stages of development of the projects described in the MOA. As this has progressed, certain aspects of the MOA were identified that the parties believe need to be clarified.

This Agreement is intended to clarify BPA's obligations under the National Environmental Policy Act (NEPA) for its role in the MOA, as described in Section 8 of the MOA, as well as the nature of the Preferred Plan Projects described in the MOA for the purposes of NEPA.

With respect to environmental compliance BPA, as a Federal agency, has certain obligations and responsibilities under NEPA and other federal laws (collectively the NEPA review process) that it must fulfill before it can make a final decision concerning whether to participate in implementation of certain of the Preferred Plan Projects described in Section 3 of the MOA and the capital cost allocation described in Sections 4 and 5 of the MOA. Nothing in the MOA shall be construed as obligating or committing BPA to make a final decision concerning any of the Preferred Plan Projects and capital cost allocation before completing the NEPA review process. In addition, BPA reserves the right to determine the appropriate NEPA and other environmental compliance strategies for its actions under the MOA, and to choose any alternatives considered in the NEPA process, including the no-action alternative.

Furthermore, the parties acknowledge and agree that while the MOA identifies a number of Preferred Plan Projects to be undertaken by the parties, each of these projects could proceed independently from the others and that no single project is contingent or dependent upon another in the goal of relieving transmission congestion in the Puget Sound Area. As such, BPA, SCL, and PSE may elect to conduct separate environmental reviews for each project identified in the MOA.

In order to meet the project schedule, please sign all originals of this Agreement, retain one original for your records and return the remaining two originals to my attention at one of the following addresses at your earliest convenience, but not later than Close of Business on August x, 2014:

Formatted: Font: 11 pt

Formatted: Font: 11 pt

First Class Mail	Overnight Delivery Service
Bonneville Power Administration	Bonneville Power Administration
Mail Stop: TSE/TPP-2	Mail Stop: TSE/TPP-2
P.O. Box 61409	7500 NE 41st Street – Suite 130
Vancouver, WA 98666-1409	Vancouver, WA 98662

BPA will ensure that Puget and SCL have a full set of original signature pages.

Please do not hesitate to contact Justin Moffett at (503) 230-3233 or me at (360) 619-6015 if you would like to discuss this information.

Sincerely,

Toni L. Timberman
Senior Transmission Account Executive
Transmission Sales

CONCUR:

Formatted: Font: Times New Roman

PUGET SOUND ENERGY, INC.

By: _____

Name: _____
(Print/Type)

Title: _____

Date: _____

CITY OF SEATTLE,
CITY LIGHT DEPARTMENT

By: _____

Name: _____
(Print/Type)

Title: _____

Date: _____

Department of Energy

Bonneville Power Administration
P.O. Box 61409
Vancouver, WA 98666-1409

TRANSMISSION SERVICES

~~July 3~~August X, 2014

In reply refer to: TSE/TPP-2

Contract No. 14TX-16062
Letter Agreement

Ms. Booga Gilbertson	Mr. Phillip West
Vice President, Operations Services	Customer Service Energy Officer
Puget Sound Energy, Inc.	City of Seattle, City Light Department
10885 NE 4th Street, PSE – 11S	700 Fifth Avenue, Suite 3200
Bellevue, WA 98004	Seattle, WA 98104-5031

Dear Ms. Gilbertson and Mr. West:

The Bonneville Power Administration (BPA), the City of Seattle, City Light Department (SCL) and Puget Sound Energy, Inc. (PSE) are parties to the Memorandum of Agreement (MOA), Contract No. 11TX-15450, relating to the Preferred Puget Sound Area Plan of Service Projects and Cost Allocation. The parties to the MOA are currently in the initial stages of development of the projects described in the MOA. As this has progressed certain aspects of the MOA were identified that the parties believe need to be clarified.

This Letter Agreement is to meet the requirement in Section 7, Payment Schedule, of the MOA, which states that "The Parties shall agree in writing to the method and schedule for the cost share contributions to be made under this MOA."

BPA, Puget and Seattle agree that waiting until the completion of a project before exchanging funds (as specified in Section 7) is not the preferred course of action, given the potential for multiple years delay for completion of a project. An alternative arrangement is described below.

The following Financial Terms and Conditions shall apply to all cost sharing obligations incurred under the MOA:

FINANCIAL TERMS AND CONDITIONS STATEMENT

Each Party's cost obligation for performance of the duties associated with construction of each Preferred Plan Project shall be as specified in Sections 4 and 5 of the MOA. The cost of performing the duties associated with construction of each Preferred Plan Project shall be the actual cost of doing the work plus an overhead rate of xx% for labor and yy% for materials-,

Comment [TLT1]: Specify separate overheads for each Party?

DRAFT

representing the indirect costs of the project office plus the contractual support costs of contract negotiation, billing and accounting functions, and contract management.

Payments made to BPA shall be held in an account established for this Agreement. If BPA needs additional funds to complete the work at any time during performance of the project, BPA may request, in writing, for PSE to advance such additional funds to BPA for deposit in the account. PSE shall advance such additional funds within 30 days of BPA's written request, and BPA may temporarily stop work until PSE supplies the requested funds. If PSE does not advance such additional funds by the due date or, if at any time before completion of the project PSE elects to stop work under this Agreement, BPA will cease all work and restore, as a cost to the project at PSE's expense, government facilities and/or records (1) to their condition prior to the beginning of work under this Agreement, or (2) to some other mutually agreeable condition.

Within a reasonable time after completion of the project BPA shall make a full accounting to PSE showing the actual costs charged against the account. BPA shall either remit any unexpended balance in the account to PSE or bill for any costs in excess of the deposits in the account. PSE shall pay any excess costs within 30 days of the billing.

Payments not received within 30 days of the invoice date will accrue interest on the amount due from the invoice date to the date paid, at an annual interest rate equal to the higher of i) the prime rate (as reported in the Wall Street Journal in the first issue published during the month in which payment by PSE is due) plus 4 percent; or ii) such prime rate multiplied by 1.5.

- Language if cost is exceeding estimate in MOA –
- Periodic (every six months?) update on status of project and where it stands with respect to estimated cost
- Provisions for each party to invoice the others
- And???

Formatted: Bulleted + Level: 1 + Aligned at: 0.04" + Indent at: 0 29"

Formatted: Bulleted + Level: 1 + Aligned at: 0.04" + Indent at: 0 29"

Formatted: List Paragraph, No bullets or numbering

Formatted: Bulleted + Level: 1 + Aligned at: 0.04" + Indent at: 0 29"

Formatted: List Paragraph, No bullets or numbering

Formatted: Bulleted + Level: 1 + Aligned at: 0.04" + Indent at: 0 29"

Formatted: List Paragraph, No bullets or numbering

Please sign all three originals of this Agreement where indicated, returning two originals to BPA one of the addresses listed below at one of the following addresses. The remaining original is for your records. BPA will ensure that Puget and SCL have a full set of original signature pages.

In order to meet the project schedule, the executed Agreement must be received by ~~c~~Close of ~~b~~Business (COB) August 1, 2014. If BPA does not receive the executed Agreement by COB August 1, 2014, this offer Letter Agreement will be considered withdrawn.

First Class Mail	Overnight Delivery Service
Bonneville Power Administration	Bonneville Power Administration
Mail Stop: TSE/TPP-2	Mail Stop: TSE/TPP-2
P.O. Box 61409	7500 NE 41st Street – Suite 130
Vancouver, WA 98666-1409	Vancouver, WA 98662

DRAFT

If you have any questions, please call me at (360) 619-6015.

Sincerely,

Toni L. Timberman
Senior Transmission Account Executive
Transmission Sales

CONCUR:

PUGET SOUND ENERGY, INC.

By: _____

Name: _____
(Print/Type)

Title: _____

Date: _____

CITY OF SEATTLE,
CITY LIGHT DEPARTMENT

By: _____

Name: _____
(Print/Type)

Title: _____

Date: _____

DRAFT

bcc:
R. Shier – FRG-2
P. Walters – FRG-2
B. Bennett – LT-7
C. Hamel – TEP/TPP-1
S. Kannan – TFB/DOB-1
J. Jusupovic – TPC/TPP-4
D. Sauer – TPCC/TPP-4
T. Van Cleave – TPCC/TPP-4
J. Brank – TPCV/OLYMPIA
P. Fiedler – TPCV/TPP-4
T. Timberman – TSE/TPP-2
P. Gibson – TSES/TPP-2
Customer File – TPC/TPP-4 (ED-21-11/Tacoma Power)
Customer File – TSE/TPP-2 (TM-11/Tacoma Power)
PWA File – TPC/TPP-4 (N0310/Latest Status)
Official File – CCM_Support (Agreement 14TP-10657)

DRAFT

From: Jusupovic,Jana D (BPA) - TPC-TPP-4
To: Marleau,Michael L (BPA) - TEP-TPP-1; Timberman,Toni L (BPA) - TSE-TPP-2
Cc: Markley,Gordon L (BPA) - TPCV-TPP-4; Hamilton,Jessica K (BPA) - TPWP-TPP-4
Subject: RE: Work Order request_BC Hydro
Date: Wednesday, October 29, 2014 4:32:11 PM

I agree as well…
This will be a separate reimbursable expense agreement with BC Hydro with no connection to the PSANI MOA.

Mike,

Just to make sure, can you please confirm that BPA is doing all the work but BC Hydro is owning and funding all the work inside their existing owned facilities as well as BPA?

From: Marleau,Michael L (BPA) - TEP-TPP-1
Sent: Wednesday, October 29, 2014 12:04 PM
To: Timberman,Toni L (BPA) - TSE-TPP-2; Jusupovic,Jana D (BPA) - TPC-TPP-4
Subject: Re: Work Order request_BC Hydro

I agree

From: Timberman,Toni L (BPA) - TSE-TPP-2
Sent: Wednesday, October 29, 2014 11:52 AM
To: Jusupovic,Jana D (BPA) - TPC-TPP-4; Marleau,Michael L (BPA) - TEP-TPP-1
Subject: Re: Work Order request_BC Hydro

It would be a (reimbursable or letter) agreement with BC Hydro. I don't see a relationship with the PSANI MOA other than this is the source of BPA funding, which should not be referenced in the agreement. I do not want BCH to be directly involved in any way with the MOA.

From: Jusupovic,Jana D (BPA) - TPC-TPP-4
Sent: Wednesday, October 29, 2014 09:37 AM Pacific Standard Time
To: Marleau,Michael L (BPA) - TEP-TPP-1; Timberman,Toni L (BPA) - TSE-TPP-2
Subject: RE: Work Order request_BC Hydro

Thank you Mike.

Toni, FYI.
Please read the last two emails, Mike is requesting a reimbursable agreement with BC Hydro that will be connected to the PSANI MOA.

From: Marleau,Michael L (BPA) - TEP-TPP-1
Sent: Wednesday, October 29, 2014 9:27 AM
To: Jusupovic,Jana D (BPA) - TPC-TPP-4
Cc: 'Dorf, Angela'; Hamilton,Jessica K (BPA) - TPWP-TPP-4; Markley,Gordon L (BPA) - TPCV-TPP-4
Subject: RE: Work Order request_BC Hydro

I'm thinking similar agreements between BC Hydro and BPA.

From: Jusupovic,Jana D (BPA) - TPC-TPP-4
Sent: Wednesday, October 29, 2014 9:25 AM
To: Marleau,Michael L (BPA) - TEP-TPP-1
Cc: 'Dorf, Angela'; Hamilton,Jessica K (BPA) - TPWP-TPP-4; Markley,Gordon L (BPA) - TPCV-TPP-4
Subject: RE: Work Order request_BC Hydro

Mike,
Sounds good, just making sure you're getting the needed help from TPC.

Also, I concur on the spending breakdown, BC Hydro funds the work in their owned facilities and BPA does the same. But, I'm assuming BPA will be doing all the construction correct?
And when you state "I'd like to follow similar agreements we have in the works" do you mean another letter agreement to the PSANI MOA or a completely separate reimbursable agreement from the letter agreements to the MOA?

From: Marleau,Michael L (BPA) - TEP-TPP-1
Sent: Wednesday, October 29, 2014 9:19 AM
To: Jusupovic,Jana D (BPA) - TPC-TPP-4; Trismen,Robert C (BPA) - TEP-CSB-1; Lane,Erik J (BPA) - TPCV-TPP-4
Cc: Deschuytter,Benjamin W (BPA) - TEP-CSB-1; 'Dorf, Angela'; Hamilton,Jessica K (BPA) - TPWP-TPP-4; Markley,Gordon L (BPA) - TPCV-TPP-4
Subject: RE: Work Order request_BC Hydro

I will work with Gordon Markley on the agreement.

To be consistent in our approach, I'd like to follow similar agreements we have in the works but this will be separate from the others.

I'm envisioning that we pay for our site (Custer), BC Hydro pays for their site (Ingledow), and we just coordinate the design together.

Thanks everyone,
Mike

From: Jusupovic,Jana D (BPA) - TPC-TPP-4
Sent: Wednesday, October 29, 2014 9:15 AM
To: Trismen,Robert C (BPA) - TEP-CSB-1; Lane,Erik J (BPA) - TPCV-TPP-4; Marleau,Michael L (BPA) - TEP-TPP-1
Cc: Deschuytter,Benjamin W (BPA) - TEP-CSB-1; 'Dorf, Angela'; Hamilton,Jessica K (BPA) - TPWP-TPP-4
Subject: RE: Work Order request_BC Hydro

Thank you everyone for clearing up this issue.
However, the only remaining question I have is does Mike still need an agreement for his BC Hydro project?
If his project is truly a "*reimbursable expense*" project, a CSE should be working with Mike regarding a customer agreement.

From: Trismen,Robert C (BPA) - TEP-CSB-1
Sent: Tuesday, October 28, 2014 2:01 PM
To: Lane,Erik J (BPA) - TPCV-TPP-4; Marleau,Michael L (BPA) - TEP-TPP-1; Jusupovic,Jana D (BPA) - TPC-TPP-4; 'Dorf, Angela'; Hamilton,Jessica K (BPA) - TPWP-TPP-4
Cc: Deschuytter,Benjamin W (BPA) - TEP-CSB-1
Subject: RE: Work Order request_BC Hydro

Erik,

Thanks; we are on the same page.

(**Mike**, regarding multiple uses for the PDR-2000 boxes to be installed under Project #1, note 18 in your PRD 295880 requires the SEPARATION of existing RSA and relaying functions. You may want to scrutinize BPA's RAS separation requirements, sometimes well understood only by our TECR RAS design engineers and John Kerr/ Dan Goodrich at Dittmer, during scoping or design of Project #2. This issue has taken me by surprise before.)

Thank you.

Bob

Bob Trismen, PMP
Senior Project Manager
Transmission Project Management | Bonneville Power Administration
office: 360-619-6467 (b) (6) [redacted]
email: rctrismen@bpa.gov mail: TEP-CSB-1

From: Timberman,Toni L (BPA) - TSE-TPP-2
To: Adams,Hub V (BPA) - LN-7; Chan,Allen C (BPA) - LT-7
Cc: Jusupovic,Jana D (BPA) - TPC-TPP-4; Marleau,Michael L (BPA) - TEP-TPP-1; Moffett,Justin T (BPA) - KEC-4
Subject: RE: PSANI MOA Letter Agreements
Date: Wednesday, October 29, 2014 6:04:00 PM

Thanks, Hub. I will take it from here, with input from the group. I really appreciate your contributions to all of the discussions surrounding this MOA. Happy performance reviews!
Toni

From: Adams,Hub V (BPA) - LN-7
Sent: Tuesday, October 28, 2014 4:05 PM
To: Timberman,Toni L (BPA) - TSE-TPP-2; Chan,Allen C (BPA) - LT-7
Cc: Jusupovic,Jana D (BPA) - TPC-TPP-4; Marleau,Michael L (BPA) - TEP-TPP-1; Moffett,Justin T (BPA) - KEC-4
Subject: RE: PSANI MOA Letter Agreements

Hello Toni, Allen, and the rest of the team – attached is my stab at merging the four agreements into one. A few notes:

- (b) (5) [redacted]
- (b) (5) [redacted]
- There are still a few other items that were not yet done when the four draft agreements were sent out in August and still need to be completed. They all should be highlighted in yellow.

At this point, given that I am moving into massive performance review mode now until my manager detail ends on Nov 10th, I'm wondering if Toni would like to take the pen on this and if she would be willing to receive and address any comments and edits from the team?

Thanks,
Hub

From: Timberman,Toni L (BPA) - TSE-TPP-2
Sent: Friday, October 24, 2014 4:15 PM
To: Adams,Hub V (BPA) - LN-7
Cc: Jusupovic,Jana D (BPA) - TPC-TPP-4; Klumpp,Elizabeth C (BPA) - DKR-WSGL
Subject: PSANI MOA Letter Agreements

Hub, per our conversation today, attached is an e-mail containing the draft letters that were sent to Puget and Seattle for review. Please ignore the FTC letter in that e-mail and use the separate one attached to this e-mail.

You are going to try to combine these four agreements into one – although I am not sure that can be

done with the FTC one because Seattle will have a separate arrangement with Puget than BPA will. Puget last said that rather than exchanging funds with Seattle they would prefer to just net out at the end.

Thanks for your help with this. As we discussed, we should move quickly on this in order to have a signed agreement that positively confirms for the City of Bellevue that BPA will not be participating in the Eastside project so they do not need to worry about NEPA. See the article in Clearing Up – I expect the City will be contacting BPA for its input.

Toni

From: Timberman,Toni L (BPA) - TSE-TPP-2
Sent: Tuesday, September 30, 2014 11:13 AM
To: Jusupovic,Jana D (BPA) - TPC-TPP-4; 'Uzma Siddiqi (uzma.siddiqi@seattle.gov)'; 'john.phillips@pse.com'
Subject: Conf call for PSANI MOA Letter Agreements

I would like to schedule a conference call to discuss the draft PSANI MOA Letter Agreements.

Please let me know your first and second choices from the following options:

- Friday October 3 anytime between 1:00 and 4:00;
- Tuesday October 14 – anytime (suggest what works best for you)
- Thursday October 16 9:30-10:30 or 1:00-2:00

I have attached the draft agreements for your reference, along with the one for the financial which had not been previously sent.

Thanks,
Toni
Toni L. Timberman
Senior Transmission Account Executive
Bonneville Power Administration
(360) 619-6015 office
(b) (6) [redacted]
tltimberman@bpa.gov

Department of Energy

Bonneville Power Administration
P.O. Box 61409
Vancouver, WA 98666-1409

TRANSMISSION SERVICES

November XX, 2014

In reply refer to: TSE/TPP-2

Contract No. 14TX-16060
Letter Agreement

Ms. Booga Gilbertson
Vice President Operations Services
Puget Sound Energy, Inc.
P.O. Box 90868
Bellevue, WA 98009-0868

Mr. Phillip West
Customer Service Energy Officer
City of Seattle, City Light Department
700 Fifth Ave., Suite 2822
Seattle, WA 98104-5031

Dear Ms. Gilbertson and Mr. West:

The Bonneville Power Administration (BPA), Puget Sound Energy, Inc., (PSE) and City of Seattle, City Light Department (SCL) are parties to the Memorandum of Agreement (MOA), Contract No. 11TX-15450, relating to the Preferred Puget Sound Area Plan of Service Projects and Cost Allocation. The parties to the MOA are currently in the initial stages of implementing their respective obligations under the MOA. As this has progressed, certain aspects of the MOA were identified that the parties believe need to be clarified.

This Letter Agreement describes these MOA clarifications to which the parties have agreed. As a convenience to the parties, the following clarifications to the MOA are organized by the section of the MOA in which they are located.

MOA Section 3

Concerning the Covington 500 kV Transformer Addition Project identified in Section 3(a) of the MOA, the parties agree that the transformer that would have been added at the Covington Substation will instead be added at the Raver Substation. There is no change in financial responsibility under the MOA due to this relocation.

Concerning the Puget Preferred Plan Projects identified in Section 3(b) of the MOA, the parties agree to replace these projects with the following projects: [identify PSE replacement projects here]. Accordingly, the parties acknowledge that BPA is not involved in any manner or capacity in PSE's Sammamish to Lakeside to Talbot Rebuild Project or its Lakeside 230 kV Transformer Addition Project.

Concerning the Bothell to SnoKing Reconductor Project identified in Section 3(c) of the MOA, this project was identified in the MOA as an SCL project. However, during subsequent discussions it was discovered that BPA owns the first ½ mile of these lines on the SnoKing end. The parties therefore agree that BPA will rebuild its owned portion of these lines at its cost, including any necessary replacement of equipment within SnoKing Substation associated with these lines.

MOA Section 7

Section 7, Payment Schedule, of the MOA states that cost share payments under the MOA will be made at the completion of individual projects, but also provides that the parties will subsequently agree to the actual method and schedule for these payments. The parties now recognize that waiting until the completion of a project before exchanging funds is not the preferred course of action, given the potential for multiple year delays for completion of a project. According, the parties agree to the following alternative billing provisions:

1. Each party's cost obligation for performance of the duties associated with construction of each Preferred Plan Project shall be as specified in Sections 4 and 5 of the MOA. The cost of performing such duties shall be the actual cost of doing the work plus overheads (do we need to specify the rates that will be charged by Puget and Seattle City Light?).

2. SCL Preferred Plan Projects

   (a) SCL shall submit invoices to BPA and Puget on a quarterly basis for BPA and Puget cost obligations associated with construction of the SCL Preferred Plan Projects. Invoices shall include supporting documentation showing cost detail. BPA shall remit payment to SCL within 30 days following receipt of the invoices. Puget shall keep an accounting of the invoices received from SCL for a final netting of SCL cost obligations against Puget cost obligations [this sentence will probably require some work to make sure it captures this arrangement correctly].

   (b) SCL shall notify BPA and Puget immediately if, at any time during the course of the project, SCL expects BPA or Puget costs to exceed the funding obligation described in Section 4 (b) of the MOA. If BPA and Puget agree to the cost increase, a cost modification to the MOA will be prepared to provide for the additional funding amount.

3. Puget Preferred Plan Projects

   (a) Puget shall submit invoices to BPA and SCL on a quarterly basis for BPA and SCL cost obligations associated with construction of the Puget Preferred Plan Projects. Invoices shall include supporting documentation showing cost detail. BPA shall remit payment to Puget within 30 days following receipt of the invoices. SCL shall keep an accounting of the invoices received from Puget for a final netting of Puget cost obligations against SCL cost obligations [same comment as above about this sentence maybe needing some work to make sure it captures this arrangement correctly].

   (b) Puget shall notify BPA and SCL immediately if, at any time during the course of the project, Puget expects BPA or SCL costs to exceed the funding obligation described in Section 4 (c) of the MOA. If BPA and SCL agree to the cost increase, a cost modification to the MOA will be prepared to provide for the additional funding amount.

4. Billing Addresses

   Bonneville Power Administration
   ATTN:

P.O. Box 61409
Vancouver, WA 98666-1409

Puget Sound Energy
ATTN:
Address
City/State/Zip

Seattle City Light
ATTN:
Address
City/State/Zip

MOA Section 8

Concerning the description of National Environmental Policy Act (NEPA) considerations in Section 8 of the MOA, the parties acknowledge that BPA, as a Federal agency, has certain obligations and responsibilities under NEPA and other federal laws (collectively the NEPA review process) that it must fulfill before it can make a final decision concerning whether to participate in implementation of certain of the Preferred Plan Projects described in Section 3 of the MOA and the capital cost allocation described in Sections 4 and 5 of the MOA. The parties agree that nothing in the MOA shall be construed as obligating or committing BPA to make a final decision concerning any of the Preferred Plan Projects and capital cost allocation before completing the NEPA review process. In addition, BPA reserves the right to determine the appropriate NEPA and other environmental compliance strategies for its actions under the MOA, and to choose any alternatives considered in the NEPA process, including the no-action alternative.

Furthermore, the parties acknowledge and agree that while the MOA identifies a number of Preferred Plan Projects to be undertaken by the parties, each of these projects could proceed independently from the others and that no single project is contingent or dependent upon another in the goal of relieving transmission congestion in the Puget Sound Area. As such, BPA, SCL, and Puget may elect to conduct separate NEPA or other environmental reviews, as applicable, for each project identified in the MOA.

Please sign all originals of this Letter Agreement, retain one original for your records and return the remaining two originals to my attention at one of the following addresses at your earliest convenience, but not later than Close of Business on November XX, 2014:

First Class Mail
Bonneville Power Administration
Mail Stop: TSE/TPP-2
P.O. Box 61409
Vancouver, WA 98666-1409

Overnight Delivery Service
Bonneville Power Administration
Mail Stop: TSE/TPP-2
7500 NE 41st Street – Suite 130
Vancouver, WA 98662

BPA will ensure that Puget and SCL have a full set of original signature pages.

If you have any questions, please call me at (360) 619-6015.

Sincerely,

Toni L. Timberman
Senior Transmission Account Executive
Transmission Sales

CONCUR:

PUGET SOUND ENERGY, INC.

By: _____

Name: _____
(Print/Type)

Title: _____

Date: _____

CITY OF SEATTLE,
CITY LIGHT DEPARTMENT

By: _____

Name: _____
(Print/Type)

Title: _____

Date: _____

From: Timberman,Toni L (BPA) - TSE-TPP-2
To: "john.phillips@pse.com"
Subject: PSANI
Date: Friday, October 31, 2014 10:11:00 AM

Hi John,

I talked to Uzma yesterday about the PSANI MOA / Letter Agreements and she is very concerned that the transfer of the BPA funding to other PSE projects will cause the MOA to have to get another ordinance. She is checking with their legal. Evidently he previously said Letter Agreements were ok as long as they did not affect the dollars being exchanged under the agreement, which is why she is now concerned.

Have you had a chance to talk to Booga yet? There is a need for the VPs to get together, and I strongly suggest that you, me and Uzma also be present to inform the discussion.

Toni

From: Timberman,Toni L (BPA) - TSE-TPP-2
To: Uzma Siddiqi (uzma.siddiqi@seattle.gov); john.phillips@pse.com
Cc: Jusupovic,Jana D (BPA) - TPC-TPP-4
Subject: draft PSANI MOA combined Letter Agreement
Date: Wednesday, November 05, 2014 3:45:00 PM
Attachments: PSANI_MOA_LTR_AGMT_Draft_ver 1.doc

Attached is the letter agreement drafted by BPA legal staff in an effort to combine all of the proposed four letter agreements into one. The thought was that, because all three parties would be signing the four letter agreements, it would be more efficient to combine them.

I have added my comments. Note that some language still needs to be developed fully.

We can discuss during our 2:30 call on Friday.

Toni

Department of Energy

Bonneville Power Administration
P.O. Box 61409
Vancouver, WA 98666-1409

TRANSMISSION SERVICES

November XX, 2014

In reply refer to: TSE/TPP-2

Contract No. 14TX-16060
Letter Agreement

Ms. Booga Gilbertson
Vice President Operations Services
Puget Sound Energy, Inc.
P.O. Box 90868
Bellevue, WA 98009-0868

Mr. Phillip West
Customer Service Energy Officer
City of Seattle, City Light Department
700 Fifth Ave., Suite 2822
Seattle, WA 98104-5031

Dear Ms. Gilbertson and Mr. West:

The Bonneville Power Administration (BPA), Puget Sound Energy, Inc., (PSE) and City of Seattle, City Light Department (SCL) are parties to the Memorandum of Agreement (MOA), Contract No. 11TX-15450, relating to the Preferred Puget Sound Area Plan of Service Projects and Cost Allocation. The parties to the MOA are currently in the initial stages of implementing their respective obligations under the MOA. As this has progressed, certain aspects of the MOA were identified that the parties believe need to be clarified.

This Letter Agreement describes these MOA clarifications to which the parties have agreed. As a convenience to the parties, the following clarifications to the MOA are organized by the section of the MOA in which they are located.

MOA Section 3

Concerning the Covington 500 kV Transformer Addition Project identified in Section 3(a) of the MOA, the parties agree that the transformer that would have been added at the Covington Substation will instead be added at the Raver Substation. There is no change in financial responsibility under the MOA due to this relocation.

Concerning the Puget Preferred Plan Projects identified in Section 3(b) of the MOA, the parties agree that the BPA funding originally intended for these projects will instead be directed -to ~~replace these projects with~~ one or more of the following PSE projects: [identify PSE replacement projects here]. Accordingly, the parties acknowledge that BPA is not involved in any manner or capacity in PSE's Sammamish to Lakeside to Talbot Rebuild Project or its Lakeside 230 kV Transformer Addition Project.

Comment [TLT1]: Does Seattle need a similar paragraph for its funding (or not) of he PPPP?

Concerning the Bothell to SnoKing Reconductor Project identified in Section 3(c) of the MOA, this project was identified in the MOA as an SCL project. However, during subsequent discussions it was discovered that BPA owns the first ½ mile of these lines on the SnoKing end. The parties therefore agree

that BPA will rebuild its owned portion of these lines at its cost, including any necessary replacement of equipment within SnoKing Substation associated with these lines.

MOA Section 7

Section 7, Payment Schedule, of the MOA states that cost share payments under the MOA will be made at the completion of individual projects, but also provides that the parties will subsequently agree to the actual method and schedule for these payments. The parties now recognize that waiting until the completion of a project before exchanging funds is not the preferred course of action, given the potential for multiple year delays for completion of a project. According, the parties agree to the following alternative billing provisions:

1. Each party's cost obligation for performance of the duties associated with construction of each Preferred Plan Project shall be as specified in Sections 4 and 5 of the MOA. The cost of performing such duties shall be the actual cost of doing the work plus overheads (do we need to specify the rates that will be charged by Puget and Seattle City Light?).

2. SCL Preferred Plan Projects

   (a) SCL shall submit invoices to BPA and Puget on a quarterly basis for BPA and Puget cost obligations associated with construction of the SCL Preferred Plan Projects. Invoices shall include supporting documentation showing cost detail. BPA shall remit payment to SCL within 30 days following receipt of the invoices. Puget shall keep an accounting of the invoices received from SCL for a final netting of SCL cost obligations against Puget cost obligations [this sentence will probably require some work to make sure it captures this arrangement correctly].

   (b) SCL shall notify BPA and Puget immediately if, at any time during the course of the project, SCL expects BPA or Puget costs to exceed the funding obligation described in Section 4 (b) of the MOA. If BPA and Puget agree to the cost increase, a cost modification to the MOA will be prepared to provide for the additional funding amount.

3. Puget Preferred Plan Projects

   (a) Puget shall submit invoices to BPA and SCL on a quarterly basis for BPA and SCL cost obligations associated with construction of the Puget Preferred Plan Projects. Invoices shall include supporting documentation showing cost detail. BPA shall remit payment to Puget within 30 days following receipt of the invoices. SCL shall keep an accounting of the invoices received from Puget for a final netting of Puget cost obligations against SCL cost obligations [same comment as above about this sentence maybe needing some work to make sure it captures this arrangement correctly].

   (b) Puget shall notify BPA and SCL immediately if, at any time during the course of the project, Puget expects BPA or SCL costs to exceed the funding obligation described in Section 4 (c) of the MOA. If BPA and SCL agree to the cost increase, a cost modification to the MOA will be prepared to provide for the additional funding amount.

4. Billing Addresses

Comment [TLT2]: I think the answer was no – he overhead was included in the original cost estimate for each PSE and SCL project. This detail should be specified in this document.

Comment [TLT3]: This language needs work since BPA will be funding alternative projects rather than the PPPP.

Bonneville Power Administration
ATTN:
P.O. Box 61409
Vancouver, WA 98666-1409

Puget Sound Energy
ATTN:
Address
City/State/Zip

Seattle City Light
ATTN:
Address
City/State/Zip

MOA Section 8

Concerning the description of National Environmental Policy Act (NEPA) considerations in Section 8 of the MOA, the parties acknowledge that BPA, as a Federal agency, has certain obligations and responsibilities under NEPA and other federal laws (collectively the NEPA review process) that it must fulfill before it can make a final decision concerning whether to participate in implementation of certain of the Preferred Plan Projects described in Section 3 of the MOA and the capital cost allocation described in Sections 4 and 5 of the MOA. The parties agree that nothing in the MOA shall be construed as obligating or committing BPA to make a final decision concerning any of the Preferred Plan Projects and capital cost allocation before completing the NEPA review process. In addition, BPA reserves the right to determine the appropriate NEPA and other environmental compliance strategies for its actions under the MOA, and to choose any alternatives considered in the NEPA process, including the no-action alternative.

Furthermore, the parties acknowledge and agree that while the MOA identifies a number of Preferred Plan Projects to be undertaken by the parties, each of these projects could proceed independently from the others and that no single project is contingent or dependent upon another in the goal of relieving transmission congestion in the Puget Sound Area. As such, BPA, SCL, and Puget may elect to conduct separate NEPA or other environmental reviews, as applicable, for each project identified in the MOA.

Please sign all originals of this Letter Agreement, retain one original for your records and return the remaining two originals to my attention at one of the following addresses at your earliest convenience, but not later than Close of Business on November XX, 2014:

First Class Mail	Overnight Delivery Service
Bonneville Power Administration	Bonneville Power Administration
Mail Stop: TSE/TPP-2	Mail Stop: TSE/TPP-2
P.O. Box 61409	7500 NE 41st Street – Suite 130
Vancouver, WA 98666-1409	Vancouver, WA 98662

BPA will ensure that Puget and SCL have a full set of original signature pages.

If you have any questions, please call me at (360) 619-6015.

Sincerely,

Toni L. Timberman
Senior Transmission Account Executive
Transmission Sales

CONCUR:

PUGET SOUND ENERGY, INC.

By: _____

Name: _____
(Print/Type)

Title: _____

Date: _____

CITY OF SEATTLE,
CITY LIGHT DEPARTMENT

By: _____

Name: _____
(Print/Type)

Title: _____

Date: _____

From: Siddiqi, Uzma
To: Timberman,Toni L (BPA) - TSE-TPP-2; Jusupovic,Jana D (BPA) - TPC-TPP-4; SCL_SMT_ConfRm3657-12; John Philips
Subject: Conf Call: PSANI Letter Agreements Follow-Up

From: Jusupovic,Jana D (BPA) - TPC-TPP-4
To: "Siddiqi, Uzma"
Cc: Timberman,Toni L (BPA) - TSE-TPP-2
Subject: RE: Conf Call: PSANI Letter Agreements Follow-Up
Date: Friday, November 07, 2014 2:07:16 PM

Thank you Uzma, I'll be on the call as well.

From: Siddiqi, Uzma [mailto:Uzma.Siddiqi@seattle.gov]
Sent: Friday, November 07, 2014 2:04 PM
To: Timberman,Toni L (BPA) - TSE-TPP-2; Jusupovic,Jana D (BPA) - TPC-TPP-4; SCL_SMT_ConfRm3657-12; John Philips
Subject: RE: Conf Call: PSANI Letter Agreements Follow-Up

The conference room number is 206-733-9954.
(no easy phone bridge at SCL)

-----Original Appointment-----
From: Siddiqi, Uzma
Sent: Friday, October 17, 2014 4:07 PM
To: Siddiqi, Uzma; Timberman,Toni L (BPA) - TSE-TPP-2; Jusupovic,Jana D (BPA) - TPC-TPP-4; SCL_SMT_ConfRm3657-12; John Philips
Subject: Conf Call: PSANI Letter Agreements Follow-Up
When: Friday, November 07, 2014 3:00 PM-3:30 PM (UTC-08:00) Pacific Time (US & Canada).
Where: SCL_SMT_ConfRm3657-12

From:	Phillips, John M - Transmission
To:	Timberman,Toni L (BPA) - TSE-TPP-2; Uzma Siddiqi (uzma.siddiqi@seattle.gov)
Cc:	Jusupovic,Jana D (BPA) - TPC-TPP-4
Subject:	RE: draft PSANI MOA combined Letter Agreement
Date:	Friday, November 07, 2014 2:20:44 PM
Attachments:	PSANI MOA LTR AGMT Draft ver 1 pse.doc

I have included some potential edits to the attached.

John Phillips
Manager of Transmission Contracts
Electric Transmission
Location: 355 110 Ave NE, Bellevue WA
Phone: (425) 462-3579

From: Timberman,Toni L (BPA) - TSE-TPP-2 [mailto:tltimberman@bpa.gov]
Sent: Wednesday, November 05, 2014 3:46 PM
To: Uzma Siddiqi (uzma.siddiqi@seattle.gov); Phillips, John M - Transmission
Cc: Jusupovic,Jana D (BPA) - TPC-TPP-4
Subject: draft PSANI MOA combined Letter Agreement

Attached is the letter agreement drafted by BPA legal staff in an effort to combine all of the proposed four letter agreements into one. The thought was that, because all three parties would be signing the four letter agreements, it would be more efficient to combine them.

I have added my comments. Note that some language still needs to be developed fully.

We can discuss during our 2:30 call on Friday.

Toni

Department of Energy

Bonneville Power Administration
P.O. Box 61409
Vancouver, WA 98666-1409

TRANSMISSION SERVICES

November XX, 2014

In reply refer to: TSE/TPP-2

Contract No. 14TX-16060
Letter Agreement

Ms. Booga Gilbertson
Vice President Operations Services
Puget Sound Energy, Inc.
P.O. Box 90868
Bellevue, WA 98009-0868

Mr. Phillip West
Customer Service Energy Officer
City of Seattle, City Light Department
700 Fifth Ave., Suite 2822
Seattle, WA 98104-5031

Dear Ms. Gilbertson and Mr. West:

The Bonneville Power Administration (BPA), Puget Sound Energy, Inc., (PSE) and City of Seattle, City Light Department (SCL) are parties to the Memorandum of Agreement (MOA), Contract No. 11TX-15450, relating to the Preferred Puget Sound Area Plan of Service Projects and Cost Allocation. The parties to the MOA are currently in the initial stages of implementing their respective obligations under the MOA. As this has progressed, certain aspects of the MOA were identified that the parties believe need to be clarified.

This Letter Agreement describes these MOA clarifications to which the parties have agreed. As a convenience to the parties, the following clarifications to the MOA are organized by the section of the MOA in which they are located.

MOA Section 3

Concerning the Covington 500 kV Transformer Addition Project identified in Section 3(a) of the MOA, the parties agree that the transformer that would have been added at the Covington Substation will instead be added at the Raver Substation. There is no change in financial responsibility under the MOA due to this relocation.

Concerning the Puget Preferred Plan Projects identified in Section 3(b) of the MOA, the parties agree that the BPA funding originally intended for these projects will instead be directed -to ~~replace these projects with~~ one or more of the following PSE projects: ~~[identify PSE replacement projects here]~~Whatcom County Transformer. Accordingly, the parties acknowledge that BPA is not involved in any manner or capacity in PSE's Sammamish to Lakeside to Talbot Rebuild Project or its Lakeside 230 kV Transformer Addition Project.

Comment [TLT1]: Does Seattle need a similar paragraph for its funding (or not) of he PPPP?

Concerning the Bothell to SnoKing Reconductor Project identified in Section 3(c) of the MOA, this project was identified in the MOA as an SCL project. However, during subsequent discussions it was discovered that BPA owns the first ½ mile of these lines on the SnoKing end. The parties therefore agree

that BPA will rebuild its owned portion of these lines at its cost, including any necessary replacement of equipment within SnoKing Substation associated with these lines.

MOA Section 7

Section 7, Payment Schedule, of the MOA states that cost share payments under the MOA will be made at the completion of individual projects, but also provides that the parties will subsequently agree to the actual method and schedule for these payments. The parties now recognize that waiting until the completion of a project before exchanging funds is not the preferred course of action, given the potential for multiple year delays for completion of a project. According, the parties agree to the following alternative billing provisions:

1. Each party's cost obligation for performance of the duties associated with construction of each Preferred Plan Project shall be as specified in Sections 4 and 5 of the MOA. The cost of performing such duties shall be the actual cost of doing the work ~~plus~~ including overheads (do we need to specify the rates that will be charged by Puget and Seattle City Light?).

2. SCL Preferred Plan Projects

   (a) SCL shall submit invoices to BPA and Puget on a quarterly basis for BPA and Puget cost obligations associated with construction of the SCL Preferred Plan Projects. Invoices shall include supporting documentation showing cost detail. BPA shall remit payment to SCL within 30 days following receipt of the invoices. Puget shall keep an accounting of the invoices received from SCL for a final netting of SCL cost obligations against Puget cost obligations ~~[this sentence will probably require some work to make sure it captures this arrangement correctly]~~. To the extend PSE has not incurred sufficient capital costs to credit the SCL obligation, or SCL capital costs have exceeded the SCL obligation, PSE remit payment to SCL within 30 days following receipt of the invoices. PSE will provide cost updates on an annual basis showing cost detail for the Puget Preferred Plan Projects.

   (b) SCL shall notify BPA and Puget immediately if, at any time during the course of the project, SCL expects BPA or Puget costs to exceed the funding obligation described in Section 4 (b) of the MOA. If BPA and Puget agree to the cost increase, a cost modification to the MOA will be prepared to provide for the additional funding amount.

3. Puget Preferred Plan Projects

   (a) Upon completion of the Bothell to SnoKing Reconductor Project and the Delridge to Duwamish Reconductor Project, Puget shall submit an invoice~~s~~ or payment to ~~BPA and~~ SCL ~~on a quarterly basis~~ for ~~BPA and~~the SCL cost obligations associated with construction of the Puget Preferred Plan Projects~~. Invoices shall include supporting documentation showing cost detail. BPA shall remit payment to Puget within 30 days following receipt of the invoices. SCL shall keep an accounting of the invoices received from Puget for a final netting of Puget cost obligations against SCL cost obligations [same comment as above about this sentence maybe needing some work to make sure it captures this arrangement correctly]~~.

   ~~(b) Puget shall notify BPA and SCL immediately if, at any time during the course of the project, Puget expects BPA or SCL costs to exceed the funding obligation described in Section 4 (c) of~~

Comment [TLT2]: I think the answer was no – he overhead was included in the original cost estimate for each PSE and SCL project. This detail should be specified in this document.

Comment [TLT3]: This language needs work since BPA will be funding alternative projects rather than the PPPP.

~~the MOA. If BPA and SCL agree to the cost increase, a cost modification to the MOA will be prepared to provide for the additional funding amount.~~

4. Billing Addresses

Bonneville Power Administration
ATTN:
P.O. Box 61409
Vancouver, WA 98666-1409

Puget Sound Energy
ATTN:
Address
City/State/Zip

Seattle City Light
ATTN:
Address
City/State/Zip

MOA Section 8

Concerning the description of National Environmental Policy Act (NEPA) considerations in Section 8 of the MOA, the parties acknowledge that BPA, as a Federal agency, has certain obligations and responsibilities under NEPA and other federal laws (collectively the NEPA review process) that it must fulfill before it can make a final decision concerning whether to participate in implementation of certain of the Preferred Plan Projects described in Section 3 of the MOA and the capital cost allocation described in Sections 4 and 5 of the MOA. The parties agree that nothing in the MOA shall be construed as obligating or committing BPA to make a final decision concerning any of the Preferred Plan Projects and capital cost allocation before completing the NEPA review process. In addition, BPA reserves the right to determine the appropriate NEPA and other environmental compliance strategies for its actions under the MOA, and to choose any alternatives considered in the NEPA process, including the no-action alternative.

Furthermore, the parties acknowledge and agree that while the MOA identifies a number of Preferred Plan Projects to be undertaken by the parties, each of these projects could proceed independently from the others and that no single project is contingent or dependent upon another in the goal of relieving transmission congestion in the Puget Sound Area. As such, BPA, SCL, and Puget may elect to conduct separate NEPA or other environmental reviews, as applicable, for each project identified in the MOA.

Please sign all originals of this Letter Agreement, retain one original for your records and return the remaining two originals to my attention at one of the following addresses at your earliest convenience, but not later than Close of Business on November XX, 2014:

First Class Mail	Overnight Delivery Service
Bonneville Power Administration	Bonneville Power Administration
Mail Stop: TSE/TPP-2	Mail Stop: TSE/TPP-2

P.O. Box 61409
Vancouver, WA 98666-1409

7500 NE 41st Street – Suite 130
Vancouver, WA 98662

BPA will ensure that Puget and SCL have a full set of original signature pages.

If you have any questions, please call me at (360) 619-6015.

Sincerely,

Toni L. Timberman
Senior Transmission Account Executive
Transmission Sales

CONCUR:

PUGET SOUND ENERGY, INC.

By: _____

Name: _____
(Print/Type)

Title: _____

Date: _____

CITY OF SEATTLE,
CITY LIGHT DEPARTMENT

By: _____

Name: _____
(Print/Type)

Title: _____

Date: _____

From: Timberman,Toni L (BPA) - TSE-TPP-2
To: Jusupovic,Jana D (BPA) - TPC-TPP-4
Subject: FW: Conf Call: PSANI Letter Agreements Follow-Up
Date: Friday, November 07, 2014 2:32:00 PM

Jana, Uzma said she can only conf. in two, so you are off the hook today.

From: Siddiqi, Uzma [mailto:Uzma.Siddiqi@seattle.gov]
Sent: Friday, November 07, 2014 2:04 PM
To: Timberman,Toni L (BPA) - TSE-TPP-2; Jusupovic,Jana D (BPA) - TPC-TPP-4; SCL_SMT_ConfRm3657-12; John Philips
Subject: RE: Conf Call: PSANI Letter Agreements Follow-Up

The conference room number is 206-733-9954.
(no easy phone bridge at SCL)

-----Original Appointment-----
From: Siddiqi, Uzma
Sent: Friday, October 17, 2014 4:07 PM
To: Siddiqi, Uzma; Timberman,Toni L (BPA) - TSE-TPP-2; Jusupovic,Jana D (BPA) - TPC-TPP-4; SCL_SMT_ConfRm3657-12; John Philips
Subject: Conf Call: PSANI Letter Agreements Follow-Up
When: Friday, November 07, 2014 3:00 PM-3:30 PM (UTC-08:00) Pacific Time (US & Canada).
Where: SCL_SMT_ConfRm3657-12

From:	Phillips, John M - Transmission
To:	Timberman,Toni L (BPA) - TSE-TPP-2; Uzma Siddiqi (uzma.siddiqi@seattle.gov)
Cc:	Jusupovic,Jana D (BPA) - TPC-TPP-4
Subject:	RE: draft PSANI MOA combined Letter Agreement
Date:	Friday, November 07, 2014 3:09:40 PM
Attachments:	PSANI MOA LTR AGMT Draft ver 2 pse.doc

Edits base on our call today.

John Phillips
Manager of Transmission Contracts
Electric Transmission
Location: 355 110 Ave NE, Bellevue WA
Phone: (425) 462-3579

From: Phillips, John M - Transmission
Sent: Friday, November 07, 2014 2:20 PM
To: 'Timberman,Toni L (BPA) - TSE-TPP-2'; Uzma Siddiqi (uzma.siddiqi@seattle.gov)
Cc: Jusupovic,Jana D (BPA) - TPC-TPP-4
Subject: RE: draft PSANI MOA combined Letter Agreement

I have included some potential edits to the attached.

John Phillips
Manager of Transmission Contracts
Electric Transmission
Location: 355 110 Ave NE, Bellevue WA
Phone: (425) 462-3579

From: Timberman,Toni L (BPA) - TSE-TPP-2 [mailto:tltimberman@bpa.gov]
Sent: Wednesday, November 05, 2014 3:46 PM
To: Uzma Siddiqi (uzma.siddiqi@seattle.gov); Phillips, John M - Transmission
Cc: Jusupovic,Jana D (BPA) - TPC-TPP-4
Subject: draft PSANI MOA combined Letter Agreement

Attached is the letter agreement drafted by BPA legal staff in an effort to combine all of the proposed four letter agreements into one. The thought was that, because all three parties would be signing the four letter agreements, it would be more efficient to combine them.

I have added my comments. Note that some language still needs to be developed fully.

We can discuss during our 2:30 call on Friday.

Toni

Department of Energy

Bonneville Power Administration
P.O. Box 61409
Vancouver, WA 98666-1409

TRANSMISSION SERVICES

November XX, 2014

In reply refer to: TSE/TPP-2

Contract No. 14TX-16060
Letter Agreement

Ms. Booga Gilbertson
Vice President Operations Services
Puget Sound Energy, Inc.
P.O. Box 90868
Bellevue, WA 98009-0868

Mr. Phillip West
Customer Service Energy Officer
The City of Seattle, City Light Department
700 Fifth Ave., Suite 2822
Seattle, WA 98104-5031

Dear Ms. Gilbertson and Mr. West:

The Bonneville Power Administration (BPA), Puget Sound Energy, Inc., (PSE) and The City of Seattle, City Light Department (SCL) are parties to the Memorandum of Agreement (MOA), Contract No. 11TX-15450, relating to the Preferred Puget Sound Area Plan of Service Projects and Cost Allocation. The parties to the MOA are currently in the initial stages of implementing their respective obligations under the MOA. As this has progressed, certain aspects of the MOA were identified that the parties believe need to be clarified.

This Letter Agreement describes these MOA clarifications to which the parties have agreed. As a convenience to the parties, the following clarifications to the MOA are organized by the section of the MOA in which they are located.

MOA Section 3

Concerning the Covington 500 kV Transformer Addition Project identified in Section 3(a) of the MOA, the parties agree that the transformer that would have been added at the Covington Substation will instead be added at the Raver Substation. There is no change in financial responsibility under the MOA due to this relocation.

Concerning the Puget Preferred Plan Projects identified in Section 3(b) of the MOA, the parties agree that the BPA funding originally intended for these projects will instead be directed -to ~~replace these projects with~~ one or more of the following PSE projects: ~~[identify PSE replacement projects here]~~Whatcom County Transformer. Accordingly, the parties acknowledge that BPA is not involved in any manner or capacity in PSE's Sammamish to Lakeside to Talbot Rebuild Project or its Lakeside 230 kV Transformer Addition Project.

Comment [TLT1]: Does Seattle need a similar paragraph for its funding (or not) of he PPPP?

Concerning the Puget Preferred Plan Projects identified in Section 3(b) of the MOA, the parties agree that the SCL funding originally intended for these projects will be directed to the Lakeside 230 kV

Transformer Addition Project. Accordingly, the parties acknowledge that SCL is not involved in any manner or capacity in PSE's Sammamish to Lakeside to Talbot Rebuild Project.

Concerning the Bothell to SnoKing Reconductor Project identified in Section 3(c) of the MOA, this project was identified in the MOA as an SCL project. However, during subsequent discussions it was discovered that BPA owns the first ½ mile of these lines on the SnoKing end. The parties therefore agree that BPA will rebuild its owned portion of these lines at its cost, including any necessary replacement of equipment within SnoKing Substation associated with these lines.

MOA Section 7

Section 7, Payment Schedule, of the MOA states that cost share payments under the MOA will be made at the completion of individual projects, but also provides that the parties will subsequently agree to the actual method and schedule for these payments. The parties now recognize that waiting until the completion of a project before exchanging funds is not the preferred course of action, given the potential for multiple year delays for completion of a project. According, the parties agree to the following alternative billing provisions:

1. Each party's cost obligation for performance of the duties associated with construction of each Preferred Plan Project shall be as specified in Sections 4 and 5 of the MOA. The cost of performing such duties shall be the actual cost of doing the work ~~plus~~ including overheads (do we need to specify the rates that will be charged by Puget and Seattle City Light?).

2. SCL Preferred Plan Projects

   (a) SCL shall submit invoices to BPA and Puget on a quarterly basis for BPA and Puget cost obligations associated with construction of the SCL Preferred Plan Projects. Invoices shall include supporting documentation showing cost detail. BPA shall remit payment to SCL within 30 days following receipt of the invoices. Puget shall keep an accounting of the invoices received from SCL for a final netting of SCL cost obligations against Puget cost obligations and notify SCL of PSE's acceptance of such charges. ~~[this sentence will probably require some work to make sure it captures this arrangement correctly]~~. To the extend PSE has not incurred sufficient capital costs to credit the SCL obligation, or SCL capital costs have exceeded the SCL obligation, PSE remit payment to SCL within 30 days following receipt of the invoices. PSE will provide cost updates on an annual basis showing cost detail for the Lakeside 230 kV Transformer Addition Project.

   (b) SCL shall notify BPA and Puget ~~immediately if~~as soon as practicable, at any time during the course of the project, SCL expects BPA or Puget costs to exceed the funding obligation described in Section 4 (b) of the MOA. ~~If BPA and Puget agree to the cost increase, a cost modification to the MOA will be prepared to provide for the additional funding amount~~Pursuant to Section 5.

3. Puget Preferred Plan Projects

   (a) Upon completion of the Bothell to SnoKing Reconductor Project and the Delridge to Duwamish Reconductor Project, Puget shall submit an invoice~~s~~ or payment to ~~BPA and~~ SCL ~~on a quarterly basis~~ for ~~BPA and~~the SCL cost obligations associated with construction of the Puget Preferred Plan Projects~~. Invoices shall include supporting documentation showing cost detail. BPA shall~~

Comment [TLT2]: I think the answer was no – he overhead was included in the original cost estimate for each PSE and SCL project. This detail should be specified in this document.

Formatted: Font: Times New Roman, Font color: Auto

~~remit payment to Puget within 30 days following receipt of the invoices. SCL shall keep an accounting of the invoices received from Puget for a final netting of Puget cost obligations against SCL cost obligations [same comment as above about this sentence maybe needing some work to make sure it captures this arrangement correctly].~~

Comment [TLT3]: This language needs work since BPA will be funding alternative projects rather than the PPPP.

~~(b) Puget shall notify BPA and SCL immediately if, at any time during the course of the project, Puget expects BPA or SCL costs to exceed the funding obligation described in Section 4 (c) of the MOA. If BPA and SCL agree to the cost increase, a cost modification to the MOA will be prepared to provide for the additional funding amount.~~

4. Billing Addresses

Bonneville Power Administration
ATTN:
P.O. Box 61409
Vancouver, WA 98666-1409

Puget Sound Energy
ATTN:
Address
City/State/Zip

Seattle City Light
ATTN:
Address
City/State/Zip

MOA Section 8

Concerning the description of National Environmental Policy Act (NEPA) considerations in Section 8 of the MOA, the parties acknowledge that BPA, as a Federal agency, has certain obligations and responsibilities under NEPA and other federal laws (collectively the NEPA review process) that it must fulfill before it can make a final decision concerning whether to participate in implementation of certain of the Preferred Plan Projects described in Section 3 of the MOA and the capital cost allocation described in Sections 4 and 5 of the MOA. The parties agree that nothing in the MOA shall be construed as obligating or committing BPA to make a final decision concerning any of the Preferred Plan Projects and capital cost allocation before completing the NEPA review process. In addition, BPA reserves the right to determine the appropriate NEPA and other environmental compliance strategies for its actions under the MOA, and to choose any alternatives considered in the NEPA process, including the no-action alternative.

Furthermore, the parties acknowledge and agree that while the MOA identifies a number of Preferred Plan Projects to be undertaken by the parties, each of these projects could proceed independently from the others and that no single project is contingent or dependent upon another in the goal of relieving transmission congestion in the Puget Sound Area. ~~As such, BPA, SCL, and Puget may elect to conduct separate NEPA or other environmental reviews, as applicable, for each project identified in the MOA.~~

Please sign all originals of this Letter Agreement, ~~retain one original for your records and~~ return the remaining ~~two~~ originals to my attention at one of the following addresses at your earliest convenience, but not later than Close of Business on November XX, 2014. BPA will issue fully executed agreements to each party:

First Class Mail	Overnight Delivery Service
Bonneville Power Administration	Bonneville Power Administration
Mail Stop: TSE/TPP-2	Mail Stop: TSE/TPP-2
P.O. Box 61409	7500 NE 41st Street – Suite 130
Vancouver, WA 98666-1409	Vancouver, WA 98662

BPA will ensure that Puget and SCL have a full set of original signature pages.

If you have any questions, please call me at (360) 619-6015.

Sincerely,

Toni L. Timberman
Senior Transmission Account Executive
Transmission Sales

CONCUR:

PUGET SOUND ENERGY, INC.

By: _____

Name: _____
(Print/Type)

Title: _____

Date: _____

THE CITY OF SEATTLE,
CITY LIGHT DEPARTMENT

By: _____

Name: _____
(Print/Type)

Title: _____

Date: _____

From: Timberman,Toni L (BPA) - TSE-TPP-2
To: "john.phillips@pse.com"; "Uzma Siddiqi (uzma.siddiqi@seattle.gov)"; Jusupovic,Jana D (BPA) - TPC-TPP-4
Subject: PSANI follow-up conf call

From: Jusupovic,Jana D (BPA) - TPC-TPP-4
To: Timberman,Toni L (BPA) - TSE-TPP-2
Subject: RE: draft PSANI MOA combined Letter Agreement
Date: Friday, November 07, 2014 3:18:34 PM

What does 's' refer to?
And no problem, lets find some time to meet next week if you need to.

From: Timberman,Toni L (BPA) - TSE-TPP-2
Sent: Friday, November 07, 2014 3:17 PM
To: Jusupovic,Jana D (BPA) - TPC-TPP-4
Subject: FW: draft PSANI MOA combined Letter Agreement

Goal is to sign by Thanksgiving – need to meet next week to review.
Uzma is still pressing to add s

From: Phillips, John M - Transmission [mailto:john.phillips@pse.com]
Sent: Friday, November 07, 2014 3:12 PM
To: Timberman,Toni L (BPA) - TSE-TPP-2; Uzma Siddiqi (uzma.siddiqi@seattle.gov)
Cc: Jusupovic,Jana D (BPA) - TPC-TPP-4
Subject: RE: draft PSANI MOA combined Letter Agreement

With one additional edit.

John Phillips
Manager of Transmission Contracts
Electric Transmission
Location: 355 110 Ave NE, Bellevue WA
Phone: (425) 462-3579

From: Phillips, John M - Transmission
Sent: Friday, November 07, 2014 3:10 PM
To: 'Timberman,Toni L (BPA) - TSE-TPP-2'; 'Uzma Siddiqi (uzma.siddiqi@seattle.gov)'
Cc: 'Jusupovic,Jana D (BPA) - TPC-TPP-4'
Subject: RE: draft PSANI MOA combined Letter Agreement

Edits base on our call today.

John Phillips
Manager of Transmission Contracts
Electric Transmission
Location: 355 110 Ave NE, Bellevue WA
Phone: (425) 462-3579

From: Phillips, John M - Transmission
Sent: Friday, November 07, 2014 2:20 PM
To: 'Timberman,Toni L (BPA) - TSE-TPP-2'; Uzma Siddiqi (uzma.siddiqi@seattle.gov)
Cc: Jusupovic,Jana D (BPA) - TPC-TPP-4
Subject: RE: draft PSANI MOA combined Letter Agreement

I have included some potential edits to the attached.

John Phillips
Manager of Transmission Contracts
Electric Transmission
Location: 355 110 Ave NE, Bellevue WA

Phone: (425) 462-3579

From: Timberman,Toni L (BPA) - TSE-TPP-2 [mailto:tltimberman@bpa.gov]
Sent: Wednesday, November 05, 2014 3:46 PM
To: Uzma Siddiqi (uzma.siddiqi@seattle.gov); Phillips, John M - Transmission
Cc: Jusupovic,Jana D (BPA) - TPC-TPP-4
Subject: draft PSANI MOA combined Letter Agreement

Attached is the letter agreement drafted by BPA legal staff in an effort to combine all of the proposed four letter agreements into one. The thought was that, because all three parties would be signing the four letter agreements, it would be more efficient to combine them.

I have added my comments. Note that some language still needs to be developed fully.

We can discuss during our 2:30 call on Friday.

Toni

Department of Energy

Bonneville Power Administration
P.O. Box 61409
Vancouver, WA 98666-1409

TRANSMISSION SERVICES

November XX, 2014

In reply refer to: TSE/TPP-2

Contract No. 14TX-16060
Letter Agreement

Ms. Booga Gilbertson
Vice President Operations Services
Puget Sound Energy, Inc.
P.O. Box 90868
Bellevue, WA 98009-0868

Mr. Phillip West
Customer Service Energy Officer
The City of Seattle, City Light Department
700 Fifth Ave., Suite 2822
Seattle, WA 98104-5031

Dear Ms. Gilbertson and Mr. West:

The Bonneville Power Administration (BPA), Puget Sound Energy, Inc., (PSE) and The City of Seattle, City Light Department (SCL) are parties to the Memorandum of Agreement (MOA), Contract No. 11TX-15450, relating to the Preferred Puget Sound Area Plan of Service Projects and Cost Allocation. The parties to the MOA are currently in the initial stages of implementing their respective obligations under the MOA. As this has progressed, certain aspects of the MOA were identified that the parties believe need to be clarified.

This Letter Agreement describes these MOA clarifications to which the parties have agreed. As a convenience to the parties, the following clarifications to the MOA are organized by the section of the MOA in which they are located.

MOA Section 3

Concerning the Covington 500 kV Transformer Addition Project identified in Section 3(a) of the MOA, the parties agree that the transformer that would have been added at the Covington Substation will instead be added at the Raver Substation. There is no change in financial responsibility under the MOA due to this relocation.

Concerning the Puget Preferred Plan Projects identified in Section 3(b) of the MOA, the parties agree that the BPA funding originally intended for these projects will instead be directed under separate agreement to ~~replace these projects with~~ one or more of the following PSE projects: ~~[identify PSE replacement projects here]~~Whatcom County Transformer. Accordingly, the parties acknowledge that BPA is not involved in any manner or capacity in PSE's Sammamish to Lakeside to Talbot Rebuild Project or its Lakeside 230 kV Transformer Addition Project.

Comment [TLT1]: Does Seattle need a similar paragraph for its funding (or not) of he PPPP?

Concerning the Puget Preferred Plan Projects identified in Section 3(b) of the MOA, the parties agree that the SCL funding originally intended for these projects will be directed to the Lakeside 230 kV

Transformer Addition Project. Accordingly, the parties acknowledge that SCL is not involved in any manner or capacity in PSE's Sammamish to Lakeside to Talbot Rebuild Project.

Concerning the Bothell to SnoKing Reconductor Project identified in Section 3(c) of the MOA, this project was identified in the MOA as an SCL project. However, during subsequent discussions it was discovered that BPA owns the first ½ mile of these lines on the SnoKing end. The parties therefore agree that BPA will rebuild its owned portion of these lines at its cost, including any necessary replacement of equipment within SnoKing Substation associated with these lines.

MOA Section 7

Section 7, Payment Schedule, of the MOA states that cost share payments under the MOA will be made at the completion of individual projects, but also provides that the parties will subsequently agree to the actual method and schedule for these payments. The parties now recognize that waiting until the completion of a project before exchanging funds is not the preferred course of action, given the potential for multiple year delays for completion of a project. According, the parties agree to the following alternative billing provisions:

1. Each party's cost obligation for performance of the duties associated with construction of each Preferred Plan Project shall be as specified in Sections 4 and 5 of the MOA. The cost of performing such duties shall be the actual cost of doing the work ~~plus~~ including overheads (do we need to specify the rates that will be charged by Puget and Seattle City Light?).

2. SCL Preferred Plan Projects

   (a) SCL shall submit invoices to BPA and Puget on a quarterly basis for BPA and Puget cost obligations associated with construction of the SCL Preferred Plan Projects. Invoices shall include supporting documentation showing cost detail. BPA shall remit payment to SCL within 30 days following receipt of the invoices. Puget shall keep an accounting of the invoices received from SCL for a final netting of SCL cost obligations against Puget cost obligations and notify SCL of PSE's acceptance of such charges. ~~[this sentence will probably require some work to make sure it captures this arrangement correctly]~~. To the extend PSE has not incurred sufficient capital costs to credit the SCL obligation, or SCL capital costs have exceeded the SCL obligation, PSE remit payment to SCL within 30 days following receipt of the invoices. PSE will provide cost updates on an annual basis showing cost detail for the Lakeside 230 kV Transformer Addition Project.

   (b) SCL shall notify BPA and Puget ~~immediately if~~as soon as practicable, at any time during the course of the project, SCL expects BPA or Puget costs to exceed the funding obligation described in Section 4 (b) of the MOA. ~~If BPA and Puget agree to the cost increase, a cost modification to the MOA will be prepared to provide for the additional funding amount~~Pursuant to Section 5.

3. Puget Preferred Plan Projects

   (a) Upon completion of the Bothell to SnoKing Reconductor Project and the Delridge to Duwamish Reconductor Project, Puget shall submit an invoice~~s~~ or payment to ~~BPA and~~ SCL ~~on a quarterly basis~~ for ~~BPA and~~the SCL cost obligations associated with construction of the Puget Preferred Plan Projects~~. Invoices shall include supporting documentation showing cost detail. BPA shall~~

Comment [TLT2]: I think the answer was no – he overhead was included in the original cost estimate for each PSE and SCL project. This detail should be specified in this document.

Formatted: Font: Times New Roman, Font color: Auto

~~remit payment to Puget within 30 days following receipt of the invoices. SCL shall keep an accounting of the invoices received from Puget for a final netting of Puget cost obligations against SCL cost obligations [same comment as above about this sentence maybe needing some work to make sure it captures this arrangement correctly].~~

Comment [TLT3]: This language needs work since BPA will be funding alternative projects rather than the PPPP.

~~(b) Puget shall notify BPA and SCL immediately if, at any time during the course of the project, Puget expects BPA or SCL costs to exceed the funding obligation described in Section 4 (c) of the MOA. If BPA and SCL agree to the cost increase, a cost modification to the MOA will be prepared to provide for the additional funding amount.~~

4. Billing Addresses

Bonneville Power Administration
ATTN:
P.O. Box 61409
Vancouver, WA 98666-1409

Puget Sound Energy
ATTN:
Address
City/State/Zip

Seattle City Light
ATTN:
Address
City/State/Zip

MOA Section 8

Concerning the description of National Environmental Policy Act (NEPA) considerations in Section 8 of the MOA, the parties acknowledge that BPA, as a Federal agency, has certain obligations and responsibilities under NEPA and other federal laws (collectively the NEPA review process) that it must fulfill before it can make a final decision concerning whether to participate in implementation of certain of the Preferred Plan Projects described in Section 3 of the MOA and the capital cost allocation described in Sections 4 and 5 of the MOA. The parties agree that nothing in the MOA shall be construed as obligating or committing BPA to make a final decision concerning any of the Preferred Plan Projects and capital cost allocation before completing the NEPA review process. In addition, BPA reserves the right to determine the appropriate NEPA and other environmental compliance strategies for its actions under the MOA, and to choose any alternatives considered in the NEPA process, including the no-action alternative.

Furthermore, the parties acknowledge and agree that while the MOA identifies a number of Preferred Plan Projects to be undertaken by the parties, each of these projects could proceed independently from the others and that no single project is contingent or dependent upon another in the goal of relieving transmission congestion in the Puget Sound Area. ~~As such, BPA, SCL, and Puget may elect to conduct separate NEPA or other environmental reviews, as applicable, for each project identified in the MOA.~~

Please sign all originals of this Letter Agreement, ~~retain one original for your records and~~ return the remaining ~~two~~ originals to my attention at one of the following addresses at your earliest convenience, but not later than Close of Business on November XX, 2014. BPA will issue fully executed agreements to each party:

First Class Mail	Overnight Delivery Service
Bonneville Power Administration	Bonneville Power Administration
Mail Stop: TSE/TPP-2	Mail Stop: TSE/TPP-2
P.O. Box 61409	7500 NE 41st Street – Suite 130
Vancouver, WA 98666-1409	Vancouver, WA 98662

BPA will ensure that Puget and SCL have a full set of original signature pages.

If you have any questions, please call me at (360) 619-6015.

Sincerely,

Toni L. Timberman
Senior Transmission Account Executive
Transmission Sales

CONCUR:

PUGET SOUND ENERGY, INC.

By: _____

Name: _____
(Print/Type)

Title: _____

Date: _____

THE CITY OF SEATTLE,
CITY LIGHT DEPARTMENT

By: _____

Name: _____
(Print/Type)

Title: _____

Date: _____

From: Jusupovic,Jana D (BPA) - TPC-TPP-4
To: Timberman,Toni L (BPA) - TSE-TPP-2
Subject: RE: draft PSANI MOA combined Letter Agreement
Date: Friday, November 07, 2014 3:46:40 PM

I see, if there is a need for a construction agreement then TPC would run with that agreement since it's short-term.

From: Timberman,Toni L (BPA) - TSE-TPP-2
Sent: Friday, November 07, 2014 3:28 PM
To: Jusupovic,Jana D (BPA) - TPC-TPP-4
Subject: RE: draft PSANI MOA combined Letter Agreement

Sorry – she was still talking and I pushed send too soon.
She still wants language added that if BPA causes an impact to SCL system BPA will be responsible for all mitigation. I said that should be in the construction agreement and she said there is no agreement. Need to talk to Mike and get something going.

From: Jusupovic,Jana D (BPA) - TPC-TPP-4
Sent: Friday, November 07, 2014 3:19 PM
To: Timberman,Toni L (BPA) - TSE-TPP-2
Subject: RE: draft PSANI MOA combined Letter Agreement

What does 's' refer to?
And no problem, lets find some time to meet next week if you need to.

From: Timberman,Toni L (BPA) - TSE-TPP-2
Sent: Friday, November 07, 2014 3:17 PM
To: Jusupovic,Jana D (BPA) - TPC-TPP-4
Subject: FW: draft PSANI MOA combined Letter Agreement

Goal is to sign by Thanksgiving – need to meet next week to review.
Uzma is still pressing to add s

From: Phillips, John M - Transmission [mailto:john.phillips@pse.com]
Sent: Friday, November 07, 2014 3:12 PM
To: Timberman,Toni L (BPA) - TSE-TPP-2; Uzma Siddiqi (uzma.siddiqi@seattle.gov)
Cc: Jusupovic,Jana D (BPA) - TPC-TPP-4
Subject: RE: draft PSANI MOA combined Letter Agreement

With one additional edit.

John Phillips
Manager of Transmission Contracts
Electric Transmission
Location: 355 110 Ave NE, Bellevue WA
Phone: (425) 462-3579

From: Phillips, John M - Transmission
Sent: Friday, November 07, 2014 3:10 PM
To: 'Timberman,Toni L (BPA) - TSE-TPP-2'; 'Uzma Siddiqi (uzma.siddiqi@seattle.gov)'
Cc: 'Jusupovic,Jana D (BPA) - TPC-TPP-4'

Subject: RE: draft PSANI MOA combined Letter Agreement

Edits base on our call today.

John Phillips
Manager of Transmission Contracts
Electric Transmission
Location: 355 110 Ave NE, Bellevue WA
Phone: (425) 462-3579

From: Phillips, John M - Transmission
Sent: Friday, November 07, 2014 2:20 PM
To: 'Timberman,Toni L (BPA) - TSE-TPP-2'; Uzma Siddiqi (uzma.siddiqi@seattle.gov)
Cc: Jusupovic,Jana D (BPA) - TPC-TPP-4
Subject: RE: draft PSANI MOA combined Letter Agreement

I have included some potential edits to the attached.

John Phillips
Manager of Transmission Contracts
Electric Transmission
Location: 355 110 Ave NE, Bellevue WA
Phone: (425) 462-3579

From: Timberman,Toni L (BPA) - TSE-TPP-2 [mailto:tltimberman@bpa.gov]
Sent: Wednesday, November 05, 2014 3:46 PM
To: Uzma Siddiqi (uzma.siddiqi@seattle.gov); Phillips, John M - Transmission
Cc: Jusupovic,Jana D (BPA) - TPC-TPP-4
Subject: draft PSANI MOA combined Letter Agreement

Attached is the letter agreement drafted by BPA legal staff in an effort to combine all of the proposed four letter agreements into one. The thought was that, because all three parties would be signing the four letter agreements, it would be more efficient to combine them.

I have added my comments. Note that some language still needs to be developed fully.

We can discuss during our 2:30 call on Friday.

Toni

From:	Siddiqi, Uzma
To:	Timberman,Toni L (BPA) - TSE-TPP-2; Jusupovic,Jana D (BPA) - TPC-TPP-4; SCL_SMT_ConfRm3657-12; John Philips
Subject:	RE: Conf Call: PSANI Letter Agreements Follow-Up
Date:	Friday, November 07, 2014 8:39:34 AM

Can you please confirm that you will all be on this call?

-----Original Appointment-----
From: Siddiqi, Uzma
Sent: Friday, October 17, 2014 4:07 PM
To: Siddiqi, Uzma; Timberman,Toni L (BPA) - TSE-TPP-2; Jusupovic,Jana D (BPA) - TPC-TPP-4; SCL_SMT_ConfRm3657-12; John Philips
Subject: Conf Call: PSANI Letter Agreements Follow-Up
When: Friday, November 07, 2014 2:30 PM-3:30 PM (UTC-08:00) Pacific Time (US & Canada).
Where: SCL_SMT_ConfRm3657-12

From: Jusupovic,Jana D (BPA) - TPC-TPP-4
To: Timberman,Toni L (BPA) - TSE-TPP-2
Subject: RE: Conf Call: PSANI Letter Agreements Follow-Up
Date: Friday, November 07, 2014 11:17:06 AM

Yes, please give her a call and let me know. Just let me know what you'd like me to do…

From: Timberman,Toni L (BPA) - TSE-TPP-2
Sent: Friday, November 07, 2014 11:14 AM
To: Jusupovic,Jana D (BPA) - TPC-TPP-4
Subject: Re: Conf Call: PSANI Letter Agreements Follow-Up

I am home today also. I checked with Uzma yesterday to see if John Phillips was available but did not hear back. She said she would reschedule if he could not join us. I will give her a call.

From: Jusupovic,Jana D (BPA) - TPC-TPP-4
Sent: Friday, November 07, 2014 09:18 AM Pacific Standard Time
To: Timberman,Toni L (BPA) - TSE-TPP-2
Subject: RE: Conf Call: PSANI Letter Agreements Follow-Up

Morning Toni,
I'm telecommuting today because I haven't been feeling well.
Do you need me on this call, if so I'd be more then happy to conference in but I don't have the conference call information?
If not, I'll make sure and follow up with you on the discussion on Monday.

Thank you,
Jana

From: Siddiqi, Uzma [mailto:Uzma.Siddiqi@seattle.gov]
Sent: Friday, November 07, 2014 8:39 AM
To: Timberman,Toni L (BPA) - TSE-TPP-2; Jusupovic,Jana D (BPA) - TPC-TPP-4; SCL_SMT_ConfRm3657-12; John Philips
Subject: RE: Conf Call: PSANI Letter Agreements Follow-Up

Can you please confirm that you will all be on this call?

-----Original Appointment-----
From: Siddiqi, Uzma
Sent: Friday, October 17, 2014 4:07 PM
To: Siddiqi, Uzma; Timberman,Toni L (BPA) - TSE-TPP-2; Jusupovic,Jana D (BPA) - TPC-TPP-4; SCL_SMT_ConfRm3657-12; John Philips
Subject: Conf Call: PSANI Letter Agreements Follow-Up
When: Friday, November 07, 2014 2:30 PM-3:30 PM (UTC-08:00) Pacific Time (US & Canada).
Where: SCL_SMT_ConfRm3657-12

From: Jusupovic,Jana D (BPA) - TPC-TPP-4
To: Timberman,Toni L (BPA) - TSE-TPP-2
Subject: RE: Call today?
Date: Friday, November 07, 2014 12:50:02 PM

Toni, would you still like me to attend?
If so, please send me the conference information.

-----Original Message-----
From: Siddiqi, Uzma [mailto:Uzma.Siddiqi@seattle.gov]
Sent: Friday, November 07, 2014 12:26 PM
To: Timberman,Toni L (BPA) - TSE-TPP-2; Jusupovic,Jana D (BPA) - TPC-TPP-4
Subject: RE: Call today?

Yup--he confirmed.

-----Original Message-----
From: Timberman,Toni L (BPA) - TSE-TPP-2 [mailto:tltimberman@bpa.gov]
Sent: Friday, November 07, 2014 12:23 PM
To: Siddiqi, Uzma; Jusupovic,Jana D (BPA) - TPC-TPP-4
Subject: Call today?

Uzma, were you able to confirm with John Phillips for today's call? If not, could you please reschedule?
Thanks,
Toni

From:	Siddiqi, Uzma
To:	Timberman,Toni L (BPA) - TSE-TPP-2; Phillips, John M - Transmission
Cc:	Jusupovic,Jana D (BPA) - TPC-TPP-4
Subject:	RE: draft PSANI MOA combined Letter Agreement
Date:	Monday, November 10, 2014 8:52:33 AM
Attachments:	PSANI_MOA_LTR_AGMT_Draft_ver 3_scl.doc

Toni and John,
Minor edits.

Toni,
We still need to address this paragraph.

Concerning the Bothell to SnoKing Reconductor Project identified in Section 3(c) of the MOA, this project was identified in the MOA as an SCL project. However, during subsequent discussions it was discovered that BPA owns the first ½ mile of these lines on the SnoKing end. The parties therefore agree that BPA will rebuild its owned portion of these lines at its cost, including any necessary replacement of equipment within SnoKing Substation associated with these lines.

Additional language as the last sentence of the paragraph above (trying some different words…):
BPA work will mitigate any additional scope at the interconnection between the BPA rebuild project and the SCL reconductor project.

Thanks,
Uzma

From: Phillips, John M - Transmission [mailto:john.phillips@pse.com]
Sent: Friday, November 07, 2014 3:12 PM
To: Timberman,Toni L (BPA) - TSE-TPP-2; Siddiqi, Uzma
Cc: Jusupovic,Jana D (BPA) - TPC-TPP-4
Subject: RE: draft PSANI MOA combined Letter Agreement

With one additional edit.

John Phillips
Manager of Transmission Contracts
Electric Transmission
Location: 355 110 Ave NE, Bellevue WA
Phone: (425) 462-3579

From: Phillips, John M - Transmission
Sent: Friday, November 07, 2014 3:10 PM
To: 'Timberman,Toni L (BPA) - TSE-TPP-2'; 'Uzma Siddiqi (uzma.siddiqi@seattle.gov)'
Cc: 'Jusupovic,Jana D (BPA) - TPC-TPP-4'
Subject: RE: draft PSANI MOA combined Letter Agreement

Edits base on our call today.

John Phillips
Manager of Transmission Contracts
Electric Transmission
Location: 355 110 Ave NE, Bellevue WA
Phone: (425) 462-3579

From: Phillips, John M - Transmission
Sent: Friday, November 07, 2014 2:20 PM
To: 'Timberman,Toni L (BPA) - TSE-TPP-2'; Uzma Siddiqi (uzma.siddiqi@seattle.gov)
Cc: Jusupovic,Jana D (BPA) - TPC-TPP-4
Subject: RE: draft PSANI MOA combined Letter Agreement

I have included some potential edits to the attached.

John Phillips
Manager of Transmission Contracts
Electric Transmission
Location: 355 110 Ave NE, Bellevue WA
Phone: (425) 462-3579

From: Timberman,Toni L (BPA) - TSE-TPP-2 [mailto:tltimberman@bpa.gov]
Sent: Wednesday, November 05, 2014 3:46 PM
To: Uzma Siddiqi (uzma.siddiqi@seattle.gov); Phillips, John M - Transmission
Cc: Jusupovic,Jana D (BPA) - TPC-TPP-4
Subject: draft PSANI MOA combined Letter Agreement

Attached is the letter agreement drafted by BPA legal staff in an effort to combine all of the proposed four letter agreements into one. The thought was that, because all three parties would be signing the four letter agreements, it would be more efficient to combine them.

I have added my comments. Note that some language still needs to be developed fully.

We can discuss during our 2:30 call on Friday.

Toni

Department of Energy

Bonneville Power Administration
P.O. Box 61409
Vancouver, WA 98666-1409

TRANSMISSION SERVICES

November XX, 2014

In reply refer to: TSE/TPP-2

Contract No. 14TX-16060
Letter Agreement

Ms. Booga Gilbertson
Vice President Operations Services
Puget Sound Energy, Inc.
P.O. Box 90868
Bellevue, WA 98009-0868

Mr. Phillip West
Customer Service Energy Officer
The City of Seattle, City Light Department
700 Fifth Ave., Suite 2822
Seattle, WA 98104-5031

Dear Ms. Gilbertson and Mr. West:

The Bonneville Power Administration (BPA), Puget Sound Energy, Inc., (PSE) and The City of Seattle, City Light Department (SCL) are parties to the Memorandum of Agreement (MOA), Contract No. 11TX-15450, relating to the Preferred Puget Sound Area Plan of Service Projects and Cost Allocation. The parties to the MOA are currently in the initial stages of implementing their respective obligations under the MOA. As this has progressed, certain aspects of the MOA were identified that the parties believe need to be clarified.

This Letter Agreement describes these MOA clarifications to which the parties have agreed. As a convenience to the parties, the following clarifications to the MOA are organized by the section of the MOA in which they are located.

MOA Section 3

Concerning the Covington 500 kV Transformer Addition Project identified in Section 3(a) of the MOA, the parties agree that the transformer that would have been added at the Covington Substation will instead be added at the Raver Substation. There is no change in financial responsibility under the MOA due to this relocation.

Concerning the Puget Preferred Plan Projects identified in Section 3(b) of the MOA, the parties agree that the BPA funding originally intended for these projects will instead be directed under separate agreement to ~~replace these projects with~~ one or more of the following PSE projects: ~~[identify PSE replacement projects here]~~Whatcom County Transformer. Accordingly, the parties acknowledge that BPA is not involved in any manner or capacity in PSE's Sammamish to Lakeside to Talbot Rebuild Project or its Lakeside 230 kV Transformer Addition Project.

Concerning the Puget Preferred Plan Projects identified in Section 3(b) of the MOA, the parties agree that the SCL funding originally intended for these projects will be directed to the Lakeside 230 kV

Transformer Addition Project. Accordingly, the parties acknowledge that SCL is not involved in any manner or capacity in PSE's Sammamish to Lakeside to Talbot Rebuild Project.

Concerning the Bothell to SnoKing Reconductor Project identified in Section 3(c) of the MOA, this project was identified in the MOA as an SCL project. However, during subsequent discussions it was discovered that BPA owns the first ½ mile of these lines on the SnoKing end. The parties therefore agree that BPA will rebuild its owned portion of these lines at its cost, including any necessary replacement of equipment within SnoKing Substation associated with these lines. BPA work will mitigate any additional scope at the interconnection between the BPA rebuild project and the SCL reconductor project.

MOA Section 7

Section 7, Payment Schedule, of the MOA states that cost share payments under the MOA will be made at the completion of individual projects, but also provides that the parties will subsequently agree to the actual method and schedule for these payments. The parties now recognize that waiting until the completion of a project before exchanging funds is not the preferred course of action, given the potential for multiple year delays for completion of a project. According, the parties agree to the following alternative billing provisions:

1. Each party's cost obligation for performance of the duties associated with construction of each Preferred Plan Project shall be as specified in Sections 4 and 5 of the MOA. The cost of performing such duties shall be the actual cost of doing the work ~~plus~~ including overheads~~ (do we need to specify the rates that will be charged by Puget and Seattle City Light?)~~.

2. SCL Preferred Plan Projects

   (a) SCL shall submit invoices to BPA and Puget on a quarterly basis for BPA and Puget cost obligations associated with construction of the SCL Preferred Plan Projects. Invoices shall include supporting documentation showing cost detail. BPA shall remit payment to SCL within 30 days following receipt of the invoices. Puget shall keep an accounting of the invoices received from SCL for a final netting of SCL cost obligations against Puget cost obligations and notify SCL of PSE's acceptance of such charges.~~ [this sentence will probably require some work to make sure it captures this arrangement correctly]~~. To the extent~~d~~t PSE has not incurred sufficient capital costs to credit the SCL obligation, or SCL capital costs have exceeded the SCL obligation, PSE will remit payment to SCL within 30 days following receipt of the invoices. PSE will provide cost updates on an annual basis showing cost detail for the Lakeside 230 kV Transformer Addition Project.

   (b) SCL shall notify BPA and Puget ~~immediately if~~as soon as practicable, at any time during the course of the project, SCL expects BPA or Puget costs to exceed the funding obligation described in Section 4 (b) of the MOA. ~~If BPA and Puget agree to the cost increase, a cost modification to the MOA will be prepared to provide for the additional funding amount~~Pursuant to Section 5.

3. Puget Preferred Plan Projects

   (a) Upon completion of the Bothell to SnoKing Reconductor Project and the Delridge to Duwamish Reconductor Project, Puget shall submit an invoice~~s~~ or payment to ~~BPA and~~ SCL ~~on a quarterly basis~~ for ~~BPA and~~the SCL cost obligations associated with construction of the Puget Preferred

Formatted: Font: Times New Roman, Font color: Auto

Plan Projects~~. Invoices shall include supporting documentation showing cost detail. BPA shall remit payment to Puget within 30 days following receipt of the invoices. SCL shall keep an accounting of the invoices received from Puget for a final netting of Puget cost obligations against SCL cost obligations [same comment as above about this sentence maybe needing some work to make sure it captures this arrangement correctly].~~

~~(b) Puget shall notify BPA and SCL immediately if, at any time during the course of the project, Puget expects BPA or SCL costs to exceed the funding obligation described in Section 4 (c) of the MOA. If BPA and SCL agree to the cost increase, a cost modification to the MOA will be prepared to provide for the additional funding amount.~~

4. Billing Addresses

Bonneville Power Administration
ATTN:
P.O. Box 61409
Vancouver, WA 98666-1409

Puget Sound Energy
ATTN:
Address
City/State/Zip

Seattle City Light
ATTN:
Address
City/State/Zip

MOA Section 8

Concerning the description of National Environmental Policy Act (NEPA) considerations in Section 8 of the MOA, the parties acknowledge that BPA, as a Federal agency, has certain obligations and responsibilities under NEPA and other federal laws (collectively the NEPA review process) that it must fulfill before it can make a final decision concerning whether to participate in implementation of certain of the Preferred Plan Projects described in Section 3 of the MOA and the capital cost allocation described in Sections 4 and 5 of the MOA. The parties agree that nothing in the MOA shall be construed as obligating or committing BPA to make a final decision concerning any of the Preferred Plan Projects and capital cost allocation before completing the NEPA review process. In addition, BPA reserves the right to determine the appropriate NEPA and other environmental compliance strategies for its actions under the MOA, and to choose any alternatives considered in the NEPA process, including the no-action alternative.

Furthermore, the parties acknowledge and agree that while the MOA identifies a number of Preferred Plan Projects to be undertaken by the parties, each of these projects could proceed independently from the others and that no single project is contingent or dependent upon another in the goal of relieving transmission congestion in the Puget Sound Area. ~~As such, BPA, SCL, and Puget may elect to conduct separate NEPA or other environmental reviews, as applicable, for each project identified in the MOA.~~

Please sign all originals of this Letter Agreement, ~~retain one original for your records and~~ return the remaining ~~two~~ originals to my attention at one of the following addresses at your earliest convenience, but not later than Close of Business on November XX, 2014. BPA will issue fully executed agreements to each party:

First Class Mail	Overnight Delivery Service
Bonneville Power Administration	Bonneville Power Administration
Mail Stop: TSE/TPP-2	Mail Stop: TSE/TPP-2
P.O. Box 61409	7500 NE 41st Street – Suite 130
Vancouver, WA 98666-1409	Vancouver, WA 98662

BPA will ensure that Puget and SCL have a full set of original signature pages.

If you have any questions, please call me at (360) 619-6015.

Sincerely,

Toni L. Timberman
Senior Transmission Account Executive
Transmission Sales

CONCUR:

PUGET SOUND ENERGY, INC.

By: _____

Name: _____
(Print/Type)

Title: _____

Date: _____

THE CITY OF SEATTLE,
CITY LIGHT DEPARTMENT

By: _____

Name: _____
(Print/Type)

Title: _____

Date: _____

From: Timberman,Toni L (BPA) - TSE-TPP-2
To: Jusupovic,Jana D (BPA) - TPC-TPP-4
Subject: draft PSANI MOA combined Letter Agreement
Date: Thursday, November 13, 2014 10:39:00 AM

Actually, I don't think you should be working with John on a construction agreement –I should, right?

From: Timberman,Toni L (BPA) - TSE-TPP-2
Sent: Thursday, November 13, 2014 10:34 AM
To: Jusupovic,Jana D (BPA) - TPC-TPP-4
Subject: FW: draft PSANI MOA combined Letter Agreement

Jana, I still do not believe that the added statement regarding BPA mitigating any impact on SCL is appropriate in this letter agreement; however, in the absence of a construction agreement I do not believe I can talk Uzma out of it. Are you working with John Weiss to get a construction agreement going?

From: Siddiqi, Uzma [mailto:Uzma.Siddiqi@seattle.gov]
Sent: Monday, November 10, 2014 8:52 AM
To: Timberman,Toni L (BPA) - TSE-TPP-2; Phillips, John M - Transmission
Cc: Jusupovic,Jana D (BPA) - TPC-TPP-4
Subject: RE: draft PSANI MOA combined Letter Agreement

Toni and John,
Minor edits.

Toni,
We still need to address this paragraph.

Concerning the Bothell to SnoKing Reconductor Project identified in Section 3(c) of the MOA, this project was identified in the MOA as an SCL project. However, during subsequent discussions it was discovered that BPA owns the first ½ mile of these lines on the SnoKing end. The parties therefore agree that BPA will rebuild its owned portion of these lines at its cost, including any necessary replacement of equipment within SnoKing Substation associated with these lines.

Additional language as the last sentence of the paragraph above (trying some different words…):
BPA work will mitigate any additional scope at the interconnection between the BPA rebuild project and the SCL reconductor project.

Thanks,
Uzma

From: Phillips, John M - Transmission [mailto:john.phillips@pse.com]
Sent: Friday, November 07, 2014 3:12 PM
To: Timberman,Toni L (BPA) - TSE-TPP-2; Siddiqi, Uzma
Cc: Jusupovic,Jana D (BPA) - TPC-TPP-4
Subject: RE: draft PSANI MOA combined Letter Agreement

With one additional edit.

John Phillips
Manager of Transmission Contracts
Electric Transmission
Location: 355 110 Ave NE, Bellevue WA
Phone: (425) 462-3579

From: Phillips, John M - Transmission
Sent: Friday, November 07, 2014 3:10 PM
To: 'Timberman,Toni L (BPA) - TSE-TPP-2'; 'Uzma Siddiqi (uzma.siddiqi@seattle.gov)'
Cc: 'Jusupovic,Jana D (BPA) - TPC-TPP-4'
Subject: RE: draft PSANI MOA combined Letter Agreement

Edits base on our call today.

John Phillips
Manager of Transmission Contracts
Electric Transmission
Location: 355 110 Ave NE, Bellevue WA
Phone: (425) 462-3579

From: Phillips, John M - Transmission
Sent: Friday, November 07, 2014 2:20 PM
To: 'Timberman,Toni L (BPA) - TSE-TPP-2'; Uzma Siddiqi (uzma.siddiqi@seattle.gov)
Cc: Jusupovic,Jana D (BPA) - TPC-TPP-4
Subject: RE: draft PSANI MOA combined Letter Agreement

I have included some potential edits to the attached.

John Phillips
Manager of Transmission Contracts
Electric Transmission
Location: 355 110 Ave NE, Bellevue WA
Phone: (425) 462-3579

From: Timberman,Toni L (BPA) - TSE-TPP-2 [mailto:tltimberman@bpa.gov]
Sent: Wednesday, November 05, 2014 3:46 PM
To: Uzma Siddiqi (uzma.siddiqi@seattle.gov); Phillips, John M - Transmission
Cc: Jusupovic,Jana D (BPA) - TPC-TPP-4
Subject: draft PSANI MOA combined Letter Agreement

Attached is the letter agreement drafted by BPA legal staff in an effort to combine all of the proposed four letter agreements into one. The thought was that, because all three parties would be signing the four letter agreements, it would be more efficient to combine them.

I have added my comments. Note that some language still needs to be developed fully.

We can discuss during our 2:30 call on Friday.

Toni

Department of Energy

Bonneville Power Administration
P.O. Box 61409
Vancouver, WA 98666-1409

TRANSMISSION SERVICES

November XX, 2014

In reply refer to: TSE/TPP-2

Contract No. 14TX-16060
Letter Agreement

Ms. Booga Gilbertson
Vice President Operations Services
Puget Sound Energy, Inc.
P.O. Box 90868
Bellevue, WA 98009-0868

Mr. Phillip West
Customer Service Energy Officer
The City of Seattle, City Light Department
700 Fifth Ave., Suite 2822
Seattle, WA 98104-5031

Dear Ms. Gilbertson and Mr. West:

The Bonneville Power Administration (BPA), Puget Sound Energy, Inc., (PSE) and The City of Seattle, City Light Department (SCL) are parties to the Memorandum of Agreement (MOA), Contract No. 11TX-15450, relating to the Preferred Puget Sound Area Plan of Service Projects and Cost Allocation. The parties to the MOA are currently in the initial stages of implementing their respective obligations under the MOA. As this has progressed, certain aspects of the MOA were identified that the parties believe need to be clarified.

This Letter Agreement describes these MOA clarifications to which the parties have agreed. As a convenience to the parties, the following clarifications to the MOA are organized by the section of the MOA in which they are located.

MOA Section 3

Concerning the Covington 500 kV Transformer Addition Project identified in Section 3(a) of the MOA, the parties agree that the transformer that would have been added at the Covington Substation will instead be added at the Raver Substation. There is no change in financial responsibility under the MOA due to this relocation.

Concerning the Puget Preferred Plan Projects identified in Section 3(b) of the MOA, the parties agree that the BPA funding originally intended for these projects will instead be directed under separate agreement to ~~replace these projects with~~ one or more of the following PSE projects: ~~[identify PSE replacement projects here]~~Whatcom County Transformer. Accordingly, the parties acknowledge that BPA is not involved in any manner or capacity in PSE's Sammamish to Lakeside to Talbot Rebuild Project or its Lakeside 230 kV Transformer Addition Project.

Concerning the Puget Preferred Plan Projects identified in Section 3(b) of the MOA, the parties agree that the SCL funding originally intended for these projects will be directed to the Lakeside 230 kV

Transformer Addition Project. Accordingly, the parties acknowledge that SCL is not involved in any manner or capacity in PSE's Sammamish to Lakeside to Talbot Rebuild Project.

Concerning the Bothell to SnoKing Reconductor Project identified in Section 3(c) of the MOA, this project was identified in the MOA as an SCL project. However, during subsequent discussions it was discovered that BPA owns the first ½ mile of these lines on the SnoKing end. The parties therefore agree that BPA will rebuild its owned portion of these lines at its cost, including any necessary replacement of equipment within SnoKing Substation associated with these lines. BPA work will mitigate any additional scope at the interconnection between the BPA rebuild project and the SCL reconductor project.

MOA Section 7

Section 7, Payment Schedule, of the MOA states that cost share payments under the MOA will be made at the completion of individual projects, but also provides that the parties will subsequently agree to the actual method and schedule for these payments. The parties now recognize that waiting until the completion of a project before exchanging funds is not the preferred course of action, given the potential for multiple year delays for completion of a project. According, the parties agree to the following alternative billing provisions:

1. Each party's cost obligation for performance of the duties associated with construction of each Preferred Plan Project shall be as specified in Sections 4 and 5 of the MOA. The cost of performing such duties shall be the actual cost of doing the work ~~plus~~ including overheads~~ (do we need to specify the rates that will be charged by Puget and Seattle City Light?)~~.

2. SCL Preferred Plan Projects

   (a) SCL shall submit invoices to BPA and Puget on a quarterly basis for BPA and Puget cost obligations associated with construction of the SCL Preferred Plan Projects. Invoices shall include supporting documentation showing cost detail. BPA shall remit payment to SCL within 30 days following receipt of the invoices. Puget shall keep an accounting of the invoices received from SCL for a final netting of SCL cost obligations against Puget cost obligations and notify SCL of PSE's acceptance of such charges.~~ [this sentence will probably require some work to make sure it captures this arrangement correctly]~~. To the extent~~d~~t PSE has not incurred sufficient capital costs to credit the SCL obligation, or SCL capital costs have exceeded the SCL obligation, PSE will remit payment to SCL within 30 days following receipt of the invoices. PSE will provide cost updates on an annual basis showing cost detail for the Lakeside 230 kV Transformer Addition Project.

   (b) SCL shall notify BPA and Puget ~~immediately if~~as soon as practicable, at any time during the course of the project, SCL expects BPA or Puget costs to exceed the funding obligation described in Section 4 (b) of the MOA. ~~If BPA and Puget agree to the cost increase, a cost modification to the MOA will be prepared to provide for the additional funding amount~~Pursuant to Section 5.

3. Puget Preferred Plan Projects

   (a) Upon completion of the Bothell to SnoKing Reconductor Project and the Delridge to Duwamish Reconductor Project, Puget shall submit an invoice~~s~~ or payment to ~~BPA and~~ SCL ~~on a quarterly basis~~ for ~~BPA and~~the SCL cost obligations associated with construction of the Puget Preferred

Formatted: Font: Times New Roman, Font color: Auto

Plan Projects~~. Invoices shall include supporting documentation showing cost detail. BPA shall remit payment to Puget within 30 days following receipt of the invoices. SCL shall keep an accounting of the invoices received from Puget for a final netting of Puget cost obligations against SCL cost obligations [same comment as above about this sentence maybe needing some work to make sure it captures this arrangement correctly].~~

~~(b) Puget shall notify BPA and SCL immediately if, at any time during the course of the project, Puget expects BPA or SCL costs to exceed the funding obligation described in Section 4 (c) of the MOA. If BPA and SCL agree to the cost increase, a cost modification to the MOA will be prepared to provide for the additional funding amount.~~

4. Billing Addresses

Bonneville Power Administration
ATTN:
P.O. Box 61409
Vancouver, WA 98666-1409

Puget Sound Energy
ATTN:
Address
City/State/Zip

Seattle City Light
ATTN:
Address
City/State/Zip

MOA Section 8

Concerning the description of National Environmental Policy Act (NEPA) considerations in Section 8 of the MOA, the parties acknowledge that BPA, as a Federal agency, has certain obligations and responsibilities under NEPA and other federal laws (collectively the NEPA review process) that it must fulfill before it can make a final decision concerning whether to participate in implementation of certain of the Preferred Plan Projects described in Section 3 of the MOA and the capital cost allocation described in Sections 4 and 5 of the MOA. The parties agree that nothing in the MOA shall be construed as obligating or committing BPA to make a final decision concerning any of the Preferred Plan Projects and capital cost allocation before completing the NEPA review process. In addition, BPA reserves the right to determine the appropriate NEPA and other environmental compliance strategies for its actions under the MOA, and to choose any alternatives considered in the NEPA process, including the no-action alternative.

Furthermore, the parties acknowledge and agree that while the MOA identifies a number of Preferred Plan Projects to be undertaken by the parties, each of these projects could proceed independently from the others and that no single project is contingent or dependent upon another in the goal of relieving transmission congestion in the Puget Sound Area. ~~As such, BPA, SCL, and Puget may elect to conduct separate NEPA or other environmental reviews, as applicable, for each project identified in the MOA.~~

Please sign all originals of this Letter Agreement, ~~retain one original for your records and~~ return the remaining ~~two~~ originals to my attention at one of the following addresses at your earliest convenience, but not later than Close of Business on November XX, 2014. BPA will issue fully executed agreements to each party:

First Class Mail	Overnight Delivery Service
Bonneville Power Administration	Bonneville Power Administration
Mail Stop: TSE/TPP-2	Mail Stop: TSE/TPP-2
P.O. Box 61409	7500 NE 41st Street – Suite 130
Vancouver, WA 98666-1409	Vancouver, WA 98662

BPA will ensure that Puget and SCL have a full set of original signature pages.

If you have any questions, please call me at (360) 619-6015.

Sincerely,

Toni L. Timberman
Senior Transmission Account Executive
Transmission Sales

CONCUR:

PUGET SOUND ENERGY, INC.

By: _____

Name: _____
(Print/Type)

Title: _____

Date: _____

THE CITY OF SEATTLE,
CITY LIGHT DEPARTMENT

By: _____

Name: _____
(Print/Type)

Title: _____

Date: _____

From: Jusupovic,Jana D (BPA) - TPC-TPP-4
To: Timberman,Toni L (BPA) - TSE-TPP-2
Subject: RE: draft PSANI MOA combined Letter Agreement
Date: Thursday, November 13, 2014 10:58:42 AM

I agree with you, the construction agreement should have that language.
And whatever is best with you, I can help John or you on the construction agreement.
Just let me know how you'd like to proceed?

From: Timberman,Toni L (BPA) - TSE-TPP-2
Sent: Thursday, November 13, 2014 10:39 AM
To: Jusupovic,Jana D (BPA) - TPC-TPP-4
Subject: draft PSANI MOA combined Letter Agreement

Actually, I don't think you should be working with John on a construction agreement –I should, right?

From: Timberman,Toni L (BPA) - TSE-TPP-2
Sent: Thursday, November 13, 2014 10:34 AM
To: Jusupovic,Jana D (BPA) - TPC-TPP-4
Subject: FW: draft PSANI MOA combined Letter Agreement

Jana, I still do not believe that the added statement regarding BPA mitigating any impact on SCL is appropriate in this letter agreement; however, in the absence of a construction agreement I do not believe I can talk Uzma out of it. Are you working with John Weiss to get a construction agreement going?

From: Siddiqi, Uzma [mailto:Uzma.Siddiqi@seattle.gov]
Sent: Monday, November 10, 2014 8:52 AM
To: Timberman,Toni L (BPA) - TSE-TPP-2; Phillips, John M - Transmission
Cc: Jusupovic,Jana D (BPA) - TPC-TPP-4
Subject: RE: draft PSANI MOA combined Letter Agreement

Toni and John,
Minor edits.

Toni,
We still need to address this paragraph.

Concerning the Bothell to SnoKing Reconductor Project identified in Section 3(c) of the MOA, this project was identified in the MOA as an SCL project. However, during subsequent discussions it was discovered that BPA owns the first ½ mile of these lines on the SnoKing end. The parties therefore agree that BPA will rebuild its owned portion of these lines at its cost, including any necessary replacement of equipment within SnoKing Substation associated with these lines.

Additional language as the last sentence of the paragraph above (trying some different words…):
BPA work will mitigate any additional scope at the interconnection between the BPA rebuild project and the SCL reconductor project.

Thanks,
Uzma

From: Phillips, John M - Transmission [mailto:john.phillips@pse.com]
Sent: Friday, November 07, 2014 3:12 PM
To: Timberman,Toni L (BPA) - TSE-TPP-2; Siddiqi, Uzma
Cc: Jusupovic,Jana D (BPA) - TPC-TPP-4
Subject: RE: draft PSANI MOA combined Letter Agreement

With one additional edit.

John Phillips
Manager of Transmission Contracts
Electric Transmission
Location: 355 110 Ave NE, Bellevue WA
Phone: (425) 462-3579

From: Phillips, John M - Transmission
Sent: Friday, November 07, 2014 3:10 PM
To: 'Timberman,Toni L (BPA) - TSE-TPP-2'; 'Uzma Siddiqi (uzma.siddiqi@seattle.gov)'
Cc: 'Jusupovic,Jana D (BPA) - TPC-TPP-4'
Subject: RE: draft PSANI MOA combined Letter Agreement

Edits base on our call today.

John Phillips
Manager of Transmission Contracts
Electric Transmission
Location: 355 110 Ave NE, Bellevue WA
Phone: (425) 462-3579

From: Phillips, John M - Transmission
Sent: Friday, November 07, 2014 2:20 PM
To: 'Timberman,Toni L (BPA) - TSE-TPP-2'; Uzma Siddiqi (uzma.siddiqi@seattle.gov)
Cc: Jusupovic,Jana D (BPA) - TPC-TPP-4
Subject: RE: draft PSANI MOA combined Letter Agreement

I have included some potential edits to the attached.

John Phillips
Manager of Transmission Contracts
Electric Transmission
Location: 355 110 Ave NE, Bellevue WA
Phone: (425) 462-3579

From: Timberman,Toni L (BPA) - TSE-TPP-2 [mailto:tltimberman@bpa.gov]
Sent: Wednesday, November 05, 2014 3:46 PM
To: Uzma Siddiqi (uzma.siddiqi@seattle.gov); Phillips, John M - Transmission
Cc: Jusupovic,Jana D (BPA) - TPC-TPP-4
Subject: draft PSANI MOA combined Letter Agreement

Attached is the letter agreement drafted by BPA legal staff in an effort to combine all of the proposed four letter agreements into one. The thought was that, because all three parties would be signing the four letter agreements, it would be more efficient to combine them.

I have added my comments. Note that some language still needs to be developed fully.

We can discuss during our 2:30 call on Friday.

Toni

From:	Jusupovic,Jana D (BPA) - TPC-TPP-4
To:	Hunter,Kathy D (BPA) - TPW-TPP-4; Marleau,Michael L (BPA) - TEP-TPP-1; Timberman,Toni L (BPA) - TSE-TPP-2
Cc:	Hargin,Cheryl D (BPA) - FS-MODD
Subject:	RE: Any update on PSANI for FY2015-FY2016-FY2017?
Date:	Thursday, November 20, 2014 1:36:51 PM

Hi Kathy,

After further discussions that Toni has had with Seattle and Puget, they are requesting to abide by the MOA and request that all payments be paid upon completion of work.
They will give us yearly cost updates in July.
The earliest expected payment for Seattle is 2017, and for Puget is 2018.
As of right now, the projected cost spend for Seattle is still $5.4M and for Puget it's still $5.3M. Total expense cost is $10.7M.
Again they will be giving us cost spend updates on a yearly basis, so I will make sure and keep you updated.

Regarding any expense funds being needed for FY15 or FY16, I don't believe so. None of the projects are projected to be completed in FY15/FY16.

Let me know if you'd like any additional information for the VP meeting?

From: Hunter,Kathy D (BPA) - FBT-MODD
Sent: Monday, November 17, 2014 9:49 AM
To: Marleau,Michael L (BPA) - TEP-TPP-1; Jusupovic,Jana D (BPA) - TPC-TPP-4; Timberman,Toni L (BPA) - TSE-TPP-2
Cc: Hargin,Cheryl D (BPA) - FS-MODD
Subject: RE: Any update on PSANI for FY2015-FY2016-FY2017?

Thanks Mike – how much? And will this work. Will we have work being done in FY2015 that we may be able to accrue for this progress payment?

From: Marleau,Michael L (BPA) - TEP-TPP-1
Sent: Monday, November 17, 2014 9:44 AM
To: Hunter,Kathy D (BPA) - FBT-MODD; Jusupovic,Jana D (BPA) - TPC-TPP-4; Timberman,Toni L (BPA) - TSE-TPP-2
Cc: Hargin,Cheryl D (BPA) - FS-MODD
Subject: RE: Any update on PSANI for FY2015-FY2016-FY2017?

I would anticipate the earliest being FY2016.

From: Hunter,Kathy D (BPA) - FBT-MODD
Sent: Monday, November 17, 2014 9:33 AM
To: Jusupovic,Jana D (BPA) - TPC-TPP-4; Timberman,Toni L (BPA) - TSE-TPP-2; Marleau,Michael L (BPA) - TEP-TPP-1
Cc: Hargin,Cheryl D (BPA) - FS-MODD
Subject: RE: Any update on PSANI for FY2015-FY2016-FY2017?

Meeting with VPs on Nov 24 so really need to give them a heads up of how much and when. Also if

we need to accrue anything at the end of fiscal year we really need to know that as well as we may need to adjust budgets

---

From: Jusupovic,Jana D (BPA) - TPC-TPP-4
Sent: Monday, November 17, 2014 9:26 AM
To: Hunter,Kathy D (BPA) - FBT-MODD; Timberman,Toni L (BPA) - TSE-TPP-2; Marleau,Michael L (BPA) - TEP-TPP-1
Subject: FW: Any update on PSANI for FY2015-FY2016-FY2017?
Importance: High

We are still planning on progress payments; we are in the process of finalizing the updated financial terms and conditions language for quarterly progress payments.

Toni or Michael,
When would you expect our first progress payment, 2015/2016?

Thank you.

From: Hunter,Kathy D (BPA) - FBT-MODD
Sent: Monday, November 17, 2014 8:31 AM
To: Jusupovic,Jana D (BPA) - TPC-TPP-4
Subject: Any update on Psani for FY2015-FY2016-FY2017?

Hi Jana

Originally you said we might be doing progress payments on this vs a big lump sum into the out years, where are we at on that!
k

From: Siddiqi, Uzma
To: Timberman,Toni L (BPA) - TSE-TPP-2
Subject: RE: draft PSANI MOA combined Letter Agreement
Date: Monday, November 17, 2014 4:20:08 PM

I just wanted to let everyone know the direction I am getting.

From: Timberman,Toni L (BPA) - TSE-TPP-2 [mailto:tltimberman@bpa.gov]
Sent: Monday, November 17, 2014 4:15 PM
To: Siddiqi, Uzma; 'Phillips, John M - Transmission'
Cc: Jusupovic,Jana D (BPA) - TPC-TPP-4
Subject: RE: draft PSANI MOA combined Letter Agreement

Thanks, Uzma. We can discuss tomorrow.
I had a brief conversation with Hardev this morning and he said that Phil West scheduled a PSANI discussion for Dec. 8 from 3-4 at SCL offices. I am assuming that Booga will be there also.
Toni

From: Siddiqi, Uzma [mailto:Uzma.Siddiqi@seattle.gov]
Sent: Monday, November 17, 2014 3:43 PM
To: Phillips, John M - Transmission; Timberman,Toni L (BPA) - TSE-TPP-2
Cc: Jusupovic,Jana D (BPA) - TPC-TPP-4
Subject: RE: draft PSANI MOA combined Letter Agreement

John and Toni,
The guidance I am getting is that MOA costs will be paid upon completion of a project not periodically during the project life. Estimate changes will be communicated periodically so that there are no surprises at the end of the project. Cost questions should be asked at the time of the update.

I am attaching a draft that attempts to capture this change.

Uzma

From: Phillips, John M - Transmission [mailto:john.phillips@pse.com]
Sent: Friday, November 07, 2014 3:12 PM
To: Timberman,Toni L (BPA) - TSE-TPP-2; Siddiqi, Uzma
Cc: Jusupovic,Jana D (BPA) - TPC-TPP-4
Subject: RE: draft PSANI MOA combined Letter Agreement

With one additional edit.

John Phillips
Manager of Transmission Contracts
Electric Transmission
Location: 355 110 Ave NE, Bellevue WA
Phone: (425) 462-3579

From: Phillips, John M - Transmission
Sent: Friday, November 07, 2014 3:10 PM

To: 'Timberman,Toni L (BPA) - TSE-TPP-2'; 'Uzma Siddiqi (uzma.siddiqi@seattle.gov)'
Cc: 'Jusupovic,Jana D (BPA) - TPC-TPP-4'
Subject: RE: draft PSANI MOA combined Letter Agreement

Edits base on our call today.

John Phillips
Manager of Transmission Contracts
Electric Transmission
Location: 355 110 Ave NE, Bellevue WA
Phone: (425) 462-3579

From: Phillips, John M - Transmission
Sent: Friday, November 07, 2014 2:20 PM
To: 'Timberman,Toni L (BPA) - TSE-TPP-2'; Uzma Siddiqi (uzma.siddiqi@seattle.gov)
Cc: Jusupovic,Jana D (BPA) - TPC-TPP-4
Subject: RE: draft PSANI MOA combined Letter Agreement

I have included some potential edits to the attached.

John Phillips
Manager of Transmission Contracts
Electric Transmission
Location: 355 110 Ave NE, Bellevue WA
Phone: (425) 462-3579

From: Timberman,Toni L (BPA) - TSE-TPP-2 [mailto:tltimberman@bpa.gov]
Sent: Wednesday, November 05, 2014 3:46 PM
To: Uzma Siddiqi (uzma.siddiqi@seattle.gov); Phillips, John M - Transmission
Cc: Jusupovic,Jana D (BPA) - TPC-TPP-4
Subject: draft PSANI MOA combined Letter Agreement

Attached is the letter agreement drafted by BPA legal staff in an effort to combine all of the proposed four letter agreements into one. The thought was that, because all three parties would be signing the four letter agreements, it would be more efficient to combine them.

I have added my comments. Note that some language still needs to be developed fully.

We can discuss during our 2:30 call on Friday.

Toni

From: Jusupovic,Jana D (BPA) - TPC-TPP-4
To: Timberman,Toni L (BPA) - TSE-TPP-2
Subject: RE: Any update on PSANI for FY2015-FY2016-FY2017?
Date: Monday, November 17, 2014 5:04:52 PM

Yes please do, and Thank you for always keeping me in the loop.
Really appreciate it.
Not sure if you saw the email from Kathy earlier, she definitely needs to know earlier then later if progress payments will be required for PSANI.

From: Timberman,Toni L (BPA) - TSE-TPP-2
Sent: Monday, November 17, 2014 4:16 PM
To: Jusupovic,Jana D (BPA) - TPC-TPP-4
Subject: RE: Any update on PSANI for FY2015-FY2016-FY2017?

Need to discuss during PSANI call tomorrow.

From: Jusupovic,Jana D (BPA) - TPC-TPP-4
Sent: Monday, November 17, 2014 9:26 AM
To: Hunter,Kathy D (BPA) - FBT-MODD; Timberman,Toni L (BPA) - TSE-TPP-2; Marleau,Michael L (BPA) - TEP-TPP-1
Subject: FW: Any update on PSANI for FY2015-FY2016-FY2017?
Importance: High

We are still planning on progress payments; we are in the process of finalizing the updated financial terms and conditions language for quarterly progress payments.

Toni or Michael,
When would you expect our first progress payment, 2015/2016?

Thank you.

From: Hunter,Kathy D (BPA) - FBT-MODD
Sent: Monday, November 17, 2014 8:31 AM
To: Jusupovic,Jana D (BPA) - TPC-TPP-4
Subject: Any update on Psani for FY2015-FY2016-FY2017?

Hi Jana

Originally you said we might be doing progress payments on this vs a big lump sum into the out years, where are we at on that!
k

From:	Timberman,Toni L (BPA) - TSE-TPP-2
To:	Jusupovic,Jana D (BPA) - TPC-TPP-4
Subject:	FW: draft PSANI MOA combined Letter Agreement
Date:	Tuesday, November 18, 2014 2:02:00 PM
Attachments:	PSANI_MOA_LTR_AGMT_Draft_ver 4_scl.doc

Are you calling in to this?

From: Siddiqi, Uzma [mailto:Uzma.Siddiqi@seattle.gov]
Sent: Monday, November 17, 2014 3:43 PM
To: Phillips, John M - Transmission; Timberman,Toni L (BPA) - TSE-TPP-2
Cc: Jusupovic,Jana D (BPA) - TPC-TPP-4
Subject: RE: draft PSANI MOA combined Letter Agreement

John and Toni,
The guidance I am getting is that MOA costs will be paid upon completion of a project not periodically during the project life. Estimate changes will be communicated periodically so that there are no surprises at the end of the project. Cost questions should be asked at the time of the update.

I am attaching a draft that attempts to capture this change.

Uzma

From: Phillips, John M - Transmission [mailto:john.phillips@pse.com]
Sent: Friday, November 07, 2014 3:12 PM
To: Timberman,Toni L (BPA) - TSE-TPP-2; Siddiqi, Uzma
Cc: Jusupovic,Jana D (BPA) - TPC-TPP-4
Subject: RE: draft PSANI MOA combined Letter Agreement

With one additional edit.

John Phillips
Manager of Transmission Contracts
Electric Transmission
Location: 355 110 Ave NE, Bellevue WA
Phone: (425) 462-3579

From: Phillips, John M - Transmission
Sent: Friday, November 07, 2014 3:10 PM
To: 'Timberman,Toni L (BPA) - TSE-TPP-2'; 'Uzma Siddiqi (uzma.siddiqi@seattle.gov)'
Cc: 'Jusupovic,Jana D (BPA) - TPC-TPP-4'
Subject: RE: draft PSANI MOA combined Letter Agreement

Edits base on our call today.

John Phillips
Manager of Transmission Contracts
Electric Transmission
Location: 355 110 Ave NE, Bellevue WA
Phone: (425) 462-3579

From: Phillips, John M - Transmission
Sent: Friday, November 07, 2014 2:20 PM
To: 'Timberman,Toni L (BPA) - TSE-TPP-2'; Uzma Siddiqi (uzma.siddiqi@seattle.gov)
Cc: Jusupovic,Jana D (BPA) - TPC-TPP-4
Subject: RE: draft PSANI MOA combined Letter Agreement

I have included some potential edits to the attached.

John Phillips
Manager of Transmission Contracts
Electric Transmission
Location: 355 110 Ave NE, Bellevue WA
Phone: (425) 462-3579

From: Timberman,Toni L (BPA) - TSE-TPP-2 [mailto:tltimberman@bpa.gov]
Sent: Wednesday, November 05, 2014 3:46 PM
To: Uzma Siddiqi (uzma.siddiqi@seattle.gov); Phillips, John M - Transmission
Cc: Jusupovic,Jana D (BPA) - TPC-TPP-4
Subject: draft PSANI MOA combined Letter Agreement

Attached is the letter agreement drafted by BPA legal staff in an effort to combine all of the proposed four letter agreements into one. The thought was that, because all three parties would be signing the four letter agreements, it would be more efficient to combine them.

I have added my comments. Note that some language still needs to be developed fully.

We can discuss during our 2:30 call on Friday.

Toni

Department of Energy

Bonneville Power Administration
P.O. Box 61409
Vancouver, WA 98666-1409

TRANSMISSION SERVICES

November XX, 2014

In reply refer to: TSE/TPP-2

Contract No. 14TX-16060
Letter Agreement

Ms. Booga Gilbertson
Vice President Operations Services
Puget Sound Energy, Inc.
P.O. Box 90868
Bellevue, WA 98009-0868

Mr. Phillip West
Customer Service Energy Officer
The City of Seattle, City Light Department
700 Fifth Ave., Suite 2822
Seattle, WA 98104-5031

Dear Ms. Gilbertson and Mr. West:

The Bonneville Power Administration (BPA), Puget Sound Energy, Inc., (PSE) and The City of Seattle, City Light Department (SCL) are parties to the Memorandum of Agreement (MOA), Contract No. 11TX-15450, relating to the Preferred Puget Sound Area Plan of Service Projects and Cost Allocation. The parties to the MOA are currently in the initial stages of implementing their respective obligations under the MOA. As this has progressed, certain aspects of the MOA were identified that the parties believe need to be clarified.

This Letter Agreement describes these MOA clarifications to which the parties have agreed. As a convenience to the parties, the following clarifications to the MOA are organized by the section of the MOA in which they are located.

MOA Section 3

Concerning the Covington 500 kV Transformer Addition Project identified in Section 3(a) of the MOA, the parties agree that the transformer that would have been added at the Covington Substation will instead be added at the Raver Substation. There is no change in financial responsibility under the MOA due to this relocation.

Concerning the Puget Preferred Plan Projects identified in Section 3(b) of the MOA, the parties agree that the BPA funding originally intended for these projects will instead be directed under separate agreement to ~~replace these projects with~~ one or more of the following PSE projects: ~~[identify PSE replacement projects here]~~Whatcom County Transformer. Accordingly, the parties acknowledge that BPA is not involved in any manner or capacity in PSE's Sammamish to Lakeside to Talbot Rebuild Project or its Lakeside 230 kV Transformer Addition Project.

Concerning the Puget Preferred Plan Projects identified in Section 3(b) of the MOA, the parties agree that the SCL funding originally intended for these projects will be directed to the Lakeside 230 kV

Transformer Addition Project. Accordingly, the parties acknowledge that SCL is not involved in any manner or capacity in PSE's Sammamish to Lakeside to Talbot Rebuild Project.

Concerning the Bothell to SnoKing Reconductor Project identified in Section 3(c) of the MOA, this project was identified in the MOA as an SCL project. However, during subsequent discussions it was discovered that BPA owns the first ½ mile of these lines on the SnoKing end. The parties therefore agree that BPA will rebuild its owned portion of these lines at its cost, including any necessary replacement of equipment within SnoKing Substation associated with these lines. BPA work will mitigate any additional scope at the interconnection between the BPA rebuild project and the SCL reconductor project.

MOA Section 7

Section 7, Payment Schedule, of the MOA states that cost share payments under the MOA will be made at the completion of individual projects, but also provides that the parties will subsequently agree to the actual method and schedule for these payments. The parties now recognize that waiting until the completion of a project before exchanging funds is not the preferred course of action, given the potential for multiple year delays for completion of a project. According, the parties agree to the following alternative billing provisions:

1. Each party's cost obligation for performance of the duties associated with construction of each Preferred Plan Project shall be as specified in Sections 4 and 5 of the MOA. The cost of performing such duties shall be the actual cost of doing the work ~~plus~~ including overheads~~(do we need to specify the rates that will be charged by Puget and Seattle City Light?)~~.

2. SCL Preferred Plan Projects

   (a) Upon completion of the SCL projects, SCL shall submit final invoices to BPA and Puget ~~on a quarterly basis for BPA and Puget cost obligations~~ associated with construction of the SCL Preferred Plan Projects. ~~Invoices shall include supporting documentation showing cost detail.~~ BPA and PSE shall remit payment to SCL within 30 days following receipt of the invoices. ~~Puget shall keep an accounting of the invoices received from SCL for a final netting of SCL cost obligations against Puget cost obligations and notify SCL of PSE's acceptance of such charges. [this sentence will probably require some work to make sure it captures this arrangement correctly]. To the extend PSE has not incurred sufficient capital costs to credit the SCL obligation, or SCL capital costs have exceeded the SCL obligation, PSE remit payment to SCL within 30 days following receipt of the invoices.~~ PSE will provide cost updates on an annual basis showing cost detail for the Lakeside 230 kV Transformer Addition Project.

   (b) SCL shall notify BPA and Puget ~~immediately if~~as soon as practicable, at any time during the course of the project, SCL ~~expects BPA or Puget costs to~~project estimates are exceeding the ~~funding obligation~~estimates described in Section 4 (b) of the MOA. Pursuant to Section 5, SCL will provide supporting documentation showing estimate details. ~~If BPA and Puget agree to the cost increase, a cost modification to the MOA will be prepared to provide for the additional funding amount~~~~Pursuant to Section 5~~.

3. Puget Preferred Plan Projects

Formatted: Font: Times New Roman, Font color: Auto

(a) Upon completion of the ~~Bothell to SnoKing Reconductor Project and the Delridge to Duwamish Reconductor Project~~ Puget Projects, Puget shall submit an invoice~~s~~ or payment to ~~BPA and~~ SCL ~~on a quarterly basis~~ for ~~BPA and~~the SCL cost obligations associated with construction of the Puget Preferred Plan Projects~~. Invoices shall include supporting documentation showing cost detail. BPA shall remit payment to Puget within 30 days following receipt of the invoices. SCL shall keep an accounting of the invoices received from Puget for a final netting of Puget cost obligations against SCL cost obligations [same comment as above about this sentence maybe needing some work to make sure it captures this arrangement correctly].~~

~~(b) Puget shall notify BPA and SCL immediately if, at any time during the course of the project, Puget expects BPA or SCL costs to exceed the funding obligation described in Section 4 (c) of the MOA. If BPA and SCL agree to the cost increase, a cost modification to the MOA will be prepared to provide for the additional funding amount.~~

4. Billing Addresses

Bonneville Power Administration
ATTN:
P.O. Box 61409
Vancouver, WA 98666-1409

Puget Sound Energy
ATTN:
Address
City/State/Zip

Seattle City Light
ATTN:
Address
City/State/Zip

MOA Section 8

Concerning the description of National Environmental Policy Act (NEPA) considerations in Section 8 of the MOA, the parties acknowledge that BPA, as a Federal agency, has certain obligations and responsibilities under NEPA and other federal laws (collectively the NEPA review process) that it must fulfill before it can make a final decision concerning whether to participate in implementation of certain of the Preferred Plan Projects described in Section 3 of the MOA and the capital cost allocation described in Sections 4 and 5 of the MOA. The parties agree that nothing in the MOA shall be construed as obligating or committing BPA to make a final decision concerning any of the Preferred Plan Projects and capital cost allocation before completing the NEPA review process. In addition, BPA reserves the right to determine the appropriate NEPA and other environmental compliance strategies for its actions under the MOA, and to choose any alternatives considered in the NEPA process, including the no-action alternative.

Furthermore, the parties acknowledge and agree that while the MOA identifies a number of Preferred Plan Projects to be undertaken by the parties, each of these projects could proceed independently from the others and that no single project is contingent or dependent upon another in the goal of relieving

transmission congestion in the Puget Sound Area. ~~As such, BPA, SCL, and Puget may elect to conduct separate NEPA or other environmental reviews, as applicable, for each project identified in the MOA.~~

Please sign all originals of this Letter Agreement, ~~retain one original for your records and~~ return the remaining ~~two~~ originals to my attention at one of the following addresses at your earliest convenience, but not later than Close of Business on November XX, 2014. BPA will issue fully executed agreements to each party:

First Class Mail	Overnight Delivery Service
Bonneville Power Administration	Bonneville Power Administration
Mail Stop: TSE/TPP-2	Mail Stop: TSE/TPP-2
P.O. Box 61409	7500 NE 41st Street – Suite 130
Vancouver, WA 98666-1409	Vancouver, WA 98662

BPA will ensure that Puget and SCL have a full set of original signature pages.

If you have any questions, please call me at (360) 619-6015.

Sincerely,

Toni L. Timberman
Senior Transmission Account Executive
Transmission Sales

CONCUR:

PUGET SOUND ENERGY, INC.

By: _____

Name: _____
(Print/Type)

Title: _____

Date: _____

THE CITY OF SEATTLE,
CITY LIGHT DEPARTMENT

By: _____

Name: _____
(Print/Type)

Title: _____

Date: _____

From: Timberman,Toni L (BPA) - TSE-TPP-2
To: Jusupovic,Jana D (BPA) - TPC-TPP-4
Subject: RE: draft PSANI MOA combined Letter Agreement
Date: Tuesday, November 18, 2014 2:54:00 PM

I need to write up what we discussed – we can talk later. Earliest possible payment 2017 for Seattle, 2018 for Puget.

From: Jusupovic,Jana D (BPA) - TPC-TPP-4
Sent: Tuesday, November 18, 2014 2:53 PM
To: Timberman,Toni L (BPA) - TSE-TPP-2
Subject: FW: draft PSANI MOA combined Letter Agreement

I understand, I'm just not sure who in BPA should be keeping track if they provide the cost updates by July 1st of each year?
Also, with that being said when would they forecast the need of the first payment?

From: Timberman,Toni L (BPA) - TSE-TPP-2
Sent: Tuesday, November 18, 2014 2:39 PM
To: Jusupovic,Jana D (BPA) - TPC-TPP-4
Subject: FW: draft PSANI MOA combined Letter Agreement

Jana, during our discussion Uzma said that the direction that $$ not go to a project until it is completed came from Phil West. He said it was a conscious decision by the signers to encourage actual completion of the projects rather than getting progress payments and having them drag on. Uzma said their budget gets set by the City Council in March/April and they would provide us with updated costs by July 1 of each year. Next estimate with better idea of Broad Street land cost will be to us by March-April 2015, which is the wild card that is going to increase the Seattle project costs. I am working on changing Uzma's draft and will send it out as soon as I get it done. We need to get legal review and finance review and then meet with Hardev asap so that he can bless our new deal.

From: Siddiqi, Uzma [mailto:Uzma.Siddiqi@seattle.gov]
Sent: Monday, November 17, 2014 3:43 PM
To: Phillips, John M - Transmission; Timberman,Toni L (BPA) - TSE-TPP-2
Cc: Jusupovic,Jana D (BPA) - TPC-TPP-4
Subject: RE: draft PSANI MOA combined Letter Agreement

John and Toni,
The guidance I am getting is that MOA costs will be paid upon completion of a project not periodically during the project life. Estimate changes will be communicated periodically so that there are no surprises at the end of the project. Cost questions should be asked at the time of the update.

I am attaching a draft that attempts to capture this change.

Uzma

From: Phillips, John M - Transmission [mailto:john.phillips@pse.com]
Sent: Friday, November 07, 2014 3:12 PM
To: Timberman,Toni L (BPA) - TSE-TPP-2; Siddiqi, Uzma
Cc: Jusupovic,Jana D (BPA) - TPC-TPP-4
Subject: RE: draft PSANI MOA combined Letter Agreement

With one additional edit.

John Phillips
Manager of Transmission Contracts
Electric Transmission
Location: 355 110 Ave NE, Bellevue WA
Phone: (425) 462-3579

From: Phillips, John M - Transmission
Sent: Friday, November 07, 2014 3:10 PM
To: 'Timberman,Toni L (BPA) - TSE-TPP-2'; 'Uzma Siddiqi (uzma.siddiqi@seattle.gov)'
Cc: 'Jusupovic,Jana D (BPA) - TPC-TPP-4'
Subject: RE: draft PSANI MOA combined Letter Agreement

Edits base on our call today.

John Phillips
Manager of Transmission Contracts
Electric Transmission
Location: 355 110 Ave NE, Bellevue WA
Phone: (425) 462-3579

From: Phillips, John M - Transmission
Sent: Friday, November 07, 2014 2:20 PM
To: 'Timberman,Toni L (BPA) - TSE-TPP-2'; Uzma Siddiqi (uzma.siddiqi@seattle.gov)
Cc: Jusupovic,Jana D (BPA) - TPC-TPP-4
Subject: RE: draft PSANI MOA combined Letter Agreement

I have included some potential edits to the attached.

John Phillips
Manager of Transmission Contracts
Electric Transmission
Location: 355 110 Ave NE, Bellevue WA
Phone: (425) 462-3579

From: Timberman,Toni L (BPA) - TSE-TPP-2 [mailto:tltimberman@bpa.gov]
Sent: Wednesday, November 05, 2014 3:46 PM
To: Uzma Siddiqi (uzma.siddiqi@seattle.gov); Phillips, John M - Transmission
Cc: Jusupovic,Jana D (BPA) - TPC-TPP-4
Subject: draft PSANI MOA combined Letter Agreement

Attached is the letter agreement drafted by BPA legal staff in an effort to combine all of the proposed four letter agreements into one. The thought was that, because all three parties would be signing the four letter agreements, it would be more efficient to combine them.

I have added my comments. Note that some language still needs to be developed fully.

We can discuss during our 2:30 call on Friday.

Toni

Department of Energy

Bonneville Power Administration
P.O. Box 61409
Vancouver, WA 98666-1409

TRANSMISSION SERVICES

November XX, 2014

In reply refer to: TSE/TPP-2

Contract No. 14TX-16060
Letter Agreement

Ms. Booga Gilbertson
Vice President Operations Services
Puget Sound Energy, Inc.
P.O. Box 90868
Bellevue, WA 98009-0868

Mr. Phillip West
Customer Service Energy Officer
The City of Seattle, City Light Department
700 Fifth Ave., Suite 2822
Seattle, WA 98104-5031

Dear Ms. Gilbertson and Mr. West:

The Bonneville Power Administration (BPA), Puget Sound Energy, Inc., (PSE) and The City of Seattle, City Light Department (SCL) are parties to the Memorandum of Agreement (MOA), Contract No. 11TX-15450, relating to the Preferred Puget Sound Area Plan of Service Projects and Cost Allocation. The parties to the MOA are currently in the initial stages of implementing their respective obligations under the MOA. As this has progressed, certain aspects of the MOA were identified that the parties believe need to be clarified.

This Letter Agreement describes these MOA clarifications to which the parties have agreed. As a convenience to the parties, the following clarifications to the MOA are organized by the section of the MOA in which they are located.

MOA Section 3

Concerning the Covington 500 kV Transformer Addition Project identified in Section 3(a) of the MOA, the parties agree that the transformer that would have been added at the Covington Substation will instead be added at the Raver Substation. There is no change in financial responsibility under the MOA due to this relocation.

Concerning the Puget Preferred Plan Projects identified in Section 3(b) of the MOA, the parties agree that the BPA funding originally intended for these projects will instead be directed under separate agreement to ~~replace these projects with~~ one or more of the following PSE projects: ~~[identify PSE replacement projects here]~~Whatcom County Transformer. Accordingly, the parties acknowledge that BPA is not involved in any manner or capacity in PSE's Sammamish to Lakeside to Talbot Rebuild Project or its Lakeside 230 kV Transformer Addition Project.

Concerning the Puget Preferred Plan Projects identified in Section 3(b) of the MOA, the parties agree that the SCL funding originally intended for these projects will be directed to the Lakeside 230 kV

Transformer Addition Project. Accordingly, the parties acknowledge that SCL is not involved in any manner or capacity in PSE's Sammamish to Lakeside to Talbot Rebuild Project.

Concerning the Bothell to SnoKing Reconductor Project identified in Section 3(c) of the MOA, this project was identified in the MOA as an SCL project. However, during subsequent discussions it was discovered that BPA owns the first ½ mile of these lines on the SnoKing end. The parties therefore agree that BPA will rebuild its owned portion of these lines at its cost, including any necessary replacement of equipment within SnoKing Substation associated with these lines. BPA work will mitigate any additional scope at the interconnection between the BPA rebuild project and the SCL reconductor project.

MOA Section 7

Section 7, Payment Schedule, of the MOA states that cost share payments under the MOA will be made at the completion of individual projects, but also provides that the parties will subsequently agree to the actual method and schedule for these payments. The parties now recognize that waiting until the completion of a project before exchanging funds is not the preferred course of action, given the potential for multiple year delays for completion of a project. According, the parties agree to the following alternative billing provisions:

1. Each party's cost obligation for performance of the duties associated with construction of each Preferred Plan Project shall be as specified in Sections 4 and 5 of the MOA. The cost of performing such duties shall be the actual cost of doing the work ~~plus~~ including overheads~~(do we need to specify the rates that will be charged by Puget and Seattle City Light?)~~.

2. SCL Preferred Plan Projects

   (a) Upon completion of the SCL projects, SCL shall submit final invoices to BPA and Puget ~~on a quarterly basis for BPA and Puget cost obligations~~ associated with construction of the SCL Preferred Plan Projects. ~~Invoices shall include supporting documentation showing cost detail.~~ BPA and PSE shall remit payment to SCL within 30 days following receipt of the invoices. ~~Puget shall keep an accounting of the invoices received from SCL for a final netting of SCL cost obligations against Puget cost obligations and notify SCL of PSE's acceptance of such charges. [this sentence will probably require some work to make sure it captures this arrangement correctly]. To the extend PSE has not incurred sufficient capital costs to credit the SCL obligation, or SCL capital costs have exceeded the SCL obligation, PSE remit payment to SCL within 30 days following receipt of the invoices.~~ PSE will provide cost updates on an annual basis showing cost detail for the Lakeside 230 kV Transformer Addition Project.

   (b) SCL shall notify BPA and Puget ~~immediately if~~as soon as practicable, at any time during the course of the project, SCL ~~expects BPA or Puget costs to~~project estimates are exceeding the ~~funding obligation~~estimates described in Section 4 (b) of the MOA. Pursuant to Section 5, SCL will provide supporting documentation showing estimate details. ~~If BPA and Puget agree to the cost increase, a cost modification to the MOA will be prepared to provide for the additional funding amount~~~~Pursuant to Section 5~~.

3. Puget Preferred Plan Projects

Formatted: Font: Times New Roman, Font color: Auto

(a) Upon completion of the ~~Bothell to SnoKing Reconductor Project and the Delridge to Duwamish Reconductor Project~~ Puget Projects, Puget shall submit an invoice~~s~~ or payment to ~~BPA and~~ SCL ~~on a quarterly basis~~ for ~~BPA and~~the SCL cost obligations associated with construction of the Puget Preferred Plan Projects~~. Invoices shall include supporting documentation showing cost detail. BPA shall remit payment to Puget within 30 days following receipt of the invoices. SCL shall keep an accounting of the invoices received from Puget for a final netting of Puget cost obligations against SCL cost obligations [same comment as above about this sentence maybe needing some work to make sure it captures this arrangement correctly].~~

~~(b) Puget shall notify BPA and SCL immediately if, at any time during the course of the project, Puget expects BPA or SCL costs to exceed the funding obligation described in Section 4 (c) of the MOA. If BPA and SCL agree to the cost increase, a cost modification to the MOA will be prepared to provide for the additional funding amount.~~

4. Billing Addresses

Bonneville Power Administration
ATTN:
P.O. Box 61409
Vancouver, WA 98666-1409

Puget Sound Energy
ATTN:
Address
City/State/Zip

Seattle City Light
ATTN:
Address
City/State/Zip

MOA Section 8

Concerning the description of National Environmental Policy Act (NEPA) considerations in Section 8 of the MOA, the parties acknowledge that BPA, as a Federal agency, has certain obligations and responsibilities under NEPA and other federal laws (collectively the NEPA review process) that it must fulfill before it can make a final decision concerning whether to participate in implementation of certain of the Preferred Plan Projects described in Section 3 of the MOA and the capital cost allocation described in Sections 4 and 5 of the MOA. The parties agree that nothing in the MOA shall be construed as obligating or committing BPA to make a final decision concerning any of the Preferred Plan Projects and capital cost allocation before completing the NEPA review process. In addition, BPA reserves the right to determine the appropriate NEPA and other environmental compliance strategies for its actions under the MOA, and to choose any alternatives considered in the NEPA process, including the no-action alternative.

Furthermore, the parties acknowledge and agree that while the MOA identifies a number of Preferred Plan Projects to be undertaken by the parties, each of these projects could proceed independently from the others and that no single project is contingent or dependent upon another in the goal of relieving

transmission congestion in the Puget Sound Area. ~~As such, BPA, SCL, and Puget may elect to conduct separate NEPA or other environmental reviews, as applicable, for each project identified in the MOA.~~

Please sign all originals of this Letter Agreement, ~~retain one original for your records and~~ return the remaining ~~two~~ originals to my attention at one of the following addresses at your earliest convenience, but not later than Close of Business on November XX, 2014. BPA will issue fully executed agreements to each party:

First Class Mail	Overnight Delivery Service
Bonneville Power Administration	Bonneville Power Administration
Mail Stop: TSE/TPP-2	Mail Stop: TSE/TPP-2
P.O. Box 61409	7500 NE 41st Street – Suite 130
Vancouver, WA 98666-1409	Vancouver, WA 98662

BPA will ensure that Puget and SCL have a full set of original signature pages.

If you have any questions, please call me at (360) 619-6015.

Sincerely,

Toni L. Timberman
Senior Transmission Account Executive
Transmission Sales

CONCUR:

PUGET SOUND ENERGY, INC.

By: _____

Name: _____
(Print/Type)

Title: _____

Date: _____

THE CITY OF SEATTLE,
CITY LIGHT DEPARTMENT

By: _____

Name: _____
(Print/Type)

Title: _____

Date: _____

From: Timberman,Toni L (BPA) - TSE-TPP-2
To: Marleau,Michael L (BPA) - TEP-TPP-1
Subject: BPA PSANI project update?
Date: Tuesday, November 18, 2014 3:07:00 PM

Hi Mike,
I understand that at the last PSANI Project Manager meeting you gave an update on the BPA projects. What is the projected energization for each one? Also, do you know who is the PM for each one?
Thanks,
Toni

From:	Timberman,Toni L (BPA) - TSE-TPP-2
To:	"Siddiqi, Uzma"; "Phillips, John M - Transmission"
Cc:	Jusupovic,Jana D (BPA) - TPC-TPP-4
Subject:	RE: draft PSANI MOA combined Letter Agreement
Date:	Tuesday, November 18, 2014 4:14:00 PM

Hi Uzma,
The MOA specifies invoicing and payment upon completion of each SCL project. Because all energization dates for the SCL projects is 2017, are you suggesting that only one invoice for all projects will be issued, or will each project still be handled individually?
Toni

From: Siddiqi, Uzma [mailto:Uzma.Siddiqi@seattle.gov]
Sent: Monday, November 17, 2014 4:20 PM
To: Timberman,Toni L (BPA) - TSE-TPP-2; 'Phillips, John M - Transmission'
Cc: Jusupovic,Jana D (BPA) - TPC-TPP-4
Subject: RE: draft PSANI MOA combined Letter Agreement

Sounds like a plan.

From: Timberman,Toni L (BPA) - TSE-TPP-2 [mailto:tltimberman@bpa.gov]
Sent: Monday, November 17, 2014 4:15 PM
To: Siddiqi, Uzma; 'Phillips, John M - Transmission'
Cc: Jusupovic,Jana D (BPA) - TPC-TPP-4
Subject: RE: draft PSANI MOA combined Letter Agreement

Thanks, Uzma. We can discuss tomorrow.
I had a brief conversation with Hardev this morning and he said that Phil West scheduled a PSANI discussion for Dec. 8 from 3-4 at SCL offices. I am assuming that Booga will be there also.
Toni

From: Siddiqi, Uzma [mailto:Uzma.Siddiqi@seattle.gov]
Sent: Monday, November 17, 2014 3:43 PM
To: Phillips, John M - Transmission; Timberman,Toni L (BPA) - TSE-TPP-2
Cc: Jusupovic,Jana D (BPA) - TPC-TPP-4
Subject: RE: draft PSANI MOA combined Letter Agreement

John and Toni,
The guidance I am getting is that MOA costs will be paid upon completion of a project not periodically during the project life. Estimate changes will be communicated periodically so that there are no surprises at the end of the project. Cost questions should be asked at the time of the update.

I am attaching a draft that attempts to capture this change.

Uzma

From: Phillips, John M - Transmission [mailto:john.phillips@pse.com]

Sent: Friday, November 07, 2014 3:12 PM
To: Timberman,Toni L (BPA) - TSE-TPP-2; Siddiqi, Uzma
Cc: Jusupovic,Jana D (BPA) - TPC-TPP-4
Subject: RE: draft PSANI MOA combined Letter Agreement

With one additional edit.

John Phillips
Manager of Transmission Contracts
Electric Transmission
Location: 355 110 Ave NE, Bellevue WA
Phone: (425) 462-3579

From: Phillips, John M - Transmission
Sent: Friday, November 07, 2014 3:10 PM
To: 'Timberman,Toni L (BPA) - TSE-TPP-2'; 'Uzma Siddiqi (uzma.siddiqi@seattle.gov)'
Cc: 'Jusupovic,Jana D (BPA) - TPC-TPP-4'
Subject: RE: draft PSANI MOA combined Letter Agreement

Edits base on our call today.

John Phillips
Manager of Transmission Contracts
Electric Transmission
Location: 355 110 Ave NE, Bellevue WA
Phone: (425) 462-3579

From: Phillips, John M - Transmission
Sent: Friday, November 07, 2014 2:20 PM
To: 'Timberman,Toni L (BPA) - TSE-TPP-2'; Uzma Siddiqi (uzma.siddiqi@seattle.gov)
Cc: Jusupovic,Jana D (BPA) - TPC-TPP-4
Subject: RE: draft PSANI MOA combined Letter Agreement

I have included some potential edits to the attached.

John Phillips
Manager of Transmission Contracts
Electric Transmission
Location: 355 110 Ave NE, Bellevue WA
Phone: (425) 462-3579

From: Timberman,Toni L (BPA) - TSE-TPP-2 [mailto:tltimberman@bpa.gov]
Sent: Wednesday, November 05, 2014 3:46 PM
To: Uzma Siddiqi (uzma.siddiqi@seattle.gov); Phillips, John M - Transmission
Cc: Jusupovic,Jana D (BPA) - TPC-TPP-4
Subject: draft PSANI MOA combined Letter Agreement

Attached is the letter agreement drafted by BPA legal staff in an effort to combine all of the proposed four letter agreements into one. The thought was that, because all three parties would be signing the four letter agreements, it would be more efficient to combine them.

I have added my comments. Note that some language still needs to be developed fully.

We can discuss during our 2:30 call on Friday.

Toni

From: Jusupovic,Jana D (BPA) - TPC-TPP-4
To: Timberman,Toni L (BPA) - TSE-TPP-2
Subject: RE: draft PSANI MOA combined Letter Agreement
Date: Thursday, November 20, 2014 1:28:24 PM

Two payments to Seattle are fine.

Is the Portal Way an approved project? When is that set to move forward?
The problem with second Puget option is how long the WO's can be kept opened for the Portal Way work, so I would have to lean towards the first option with Puget.
Bill them for the work we do at Portal Way and then reimburse them that amount up to the final accounting cost of both parts to the Eastside project.

As long as there's no association of BPA's money being associated to the Eastside project we should be fine.

Does that sound right?

-----Original Message-----
From: Timberman,Toni L (BPA) - TSE-TPP-2
Sent: Thursday, November 20, 2014 8:48 AM
To: Jusupovic,Jana D (BPA) - TPC-TPP-4
Subject: RE: draft PSANI MOA combined Letter Agreement

I think two payments to Seattle would work best.

For Puget, what they suggested is that we follow our normal process of them paying us for the installation of their proposed new transformer in the area of Portal Way, and then we reimburse them for that cost up to the amount determined by the final accounting when both parts of their Eastside project has been completed.

Or, we could net out the anticipated cost for the Eastside projects as part of the final accounting for the Portal Way transformer, and then true up after the Eastside projects are done.

-----Original Message-----
From: Jusupovic,Jana D (BPA) - TPC-TPP-4
Sent: Wednesday, November 19, 2014 4:05 PM
To: Timberman,Toni L (BPA) - TSE-TPP-2
Subject: RE: draft PSANI MOA combined Letter Agreement

Hi Toni,

According to Uzma's response below, would you prefer we make 4 payments or two? And it sounds like they would all be made in 2017 still?

I assume PSE would only give us one bill, for the Lakeside 230KV Transformer addition work correct? Or are our funds being used for another project as well?
And would the projects be slated to be completed in 2018?

I'm just trying to get back to finance on when they should expect the expense funds to be needed.

Thank you!

-----Original Message-----
From: Siddiqi, Uzma [mailto:Uzma.Siddiqi@seattle.gov]
Sent: Tuesday, November 18, 2014 5:07 PM
To: Timberman,Toni L (BPA) - TSE-TPP-2; 'Phillips, John M - Transmission'

Cc: Jusupovic,Jana D (BPA) - TPC-TPP-4
Subject: RE: draft PSANI MOA combined Letter Agreement

Toni,

Four payments for the four projects would be fine with SCL.

The easier thing for BPA and PSE may be to have two invoices. The inductor projects together. The reconductor projects together.
These pair up nicely. Both inductors need to be installed to operate as planned--hence the project would be "completed". Both reconductor projects are needed to calculate the multiplier.

One payment is NOT recommended.

Thanks for asking,
Uzma

_____
From: Timberman,Toni L (BPA) - TSE-TPP-2 [tltimberman@bpa.gov]
Sent: Tuesday, November 18, 2014 4:14 PM
To: Siddiqi, Uzma; 'Phillips, John M - Transmission'
Cc: Jusupovic,Jana D (BPA) - TPC-TPP-4
Subject: RE: draft PSANI MOA combined Letter Agreement

Hi Uzma,
The MOA specifies invoicing and payment upon completion of each SCL project. Because all energization dates for the SCL projects is 2017, are you suggesting that only one invoice for all projects will be issued, or will each project still be handled individually?
Toni

From: Siddiqi, Uzma [mailto:Uzma.Siddiqi@seattle.gov]
Sent: Monday, November 17, 2014 4:20 PM
To: Timberman,Toni L (BPA) - TSE-TPP-2; 'Phillips, John M - Transmission'
Cc: Jusupovic,Jana D (BPA) - TPC-TPP-4
Subject: RE: draft PSANI MOA combined Letter Agreement

Sounds like a plan.

From: Timberman,Toni L (BPA) - TSE-TPP-2 [mailto:tltimberman@bpa.gov]
Sent: Monday, November 17, 2014 4:15 PM
To: Siddiqi, Uzma; 'Phillips, John M - Transmission'
Cc: Jusupovic,Jana D (BPA) - TPC-TPP-4
Subject: RE: draft PSANI MOA combined Letter Agreement

Thanks, Uzma. We can discuss tomorrow.
I had a brief conversation with Hardev this morning and he said that Phil West scheduled a PSANI discussion for Dec. 8 from 3-4 at SCL offices. I am assuming that Booga will be there also.
Toni

From: Siddiqi, Uzma [mailto:Uzma.Siddiqi@seattle.gov]
Sent: Monday, November 17, 2014 3:43 PM
To: Phillips, John M - Transmission; Timberman,Toni L (BPA) - TSE-TPP-2
Cc: Jusupovic,Jana D (BPA) - TPC-TPP-4
Subject: RE: draft PSANI MOA combined Letter Agreement

John and Toni,
The guidance I am getting is that MOA costs will be paid upon completion of a project not periodically during the project life. Estimate changes will be communicated periodically so that there are no surprises at the end of the project. Cost questions should be asked at the time of the update.

I am attaching a draft that attempts to capture this change.

Uzma

From: Phillips, John M - Transmission [mailto:john.phillips@pse.com]
Sent: Friday, November 07, 2014 3:12 PM
To: Timberman,Toni L (BPA) - TSE-TPP-2; Siddiqi, Uzma
Cc: Jusupovic,Jana D (BPA) - TPC-TPP-4
Subject: RE: draft PSANI MOA combined Letter Agreement

With one additional edit.

John Phillips
Manager of Transmission Contracts
Electric Transmission
Location: 355 110 Ave NE, Bellevue WA
Phone: (425) 462-3579

From: Phillips, John M - Transmission
Sent: Friday, November 07, 2014 3:10 PM
To: 'Timberman,Toni L (BPA) - TSE-TPP-2'; 'Uzma Siddiqi (uzma.siddiqi@seattle.gov<mailto:uzma.siddiqi@seattle.gov>)'
Cc: 'Jusupovic,Jana D (BPA) - TPC-TPP-4'
Subject: RE: draft PSANI MOA combined Letter Agreement

Edits base on our call today.

John Phillips
Manager of Transmission Contracts
Electric Transmission
Location: 355 110 Ave NE, Bellevue WA
Phone: (425) 462-3579

From: Phillips, John M - Transmission
Sent: Friday, November 07, 2014 2:20 PM
To: 'Timberman,Toni L (BPA) - TSE-TPP-2'; Uzma Siddiqi (uzma.siddiqi@seattle.gov<mailto:uzma.siddiqi@seattle.gov>)
Cc: Jusupovic,Jana D (BPA) - TPC-TPP-4
Subject: RE: draft PSANI MOA combined Letter Agreement

I have included some potential edits to the attached.

John Phillips
Manager of Transmission Contracts
Electric Transmission
Location: 355 110 Ave NE, Bellevue WA
Phone: (425) 462-3579

From: Timberman,Toni L (BPA) - TSE-TPP-2 [mailto:tltimberman@bpa.gov]
Sent: Wednesday, November 05, 2014 3:46 PM
To: Uzma Siddiqi (uzma.siddiqi@seattle.gov<mailto:uzma.siddiqi@seattle.gov>); Phillips, John M - Transmission
Cc: Jusupovic,Jana D (BPA) - TPC-TPP-4
Subject: draft PSANI MOA combined Letter Agreement

Attached is the letter agreement drafted by BPA legal staff in an effort to combine all of the proposed four letter agreements into one. The thought was that, because all three parties would be signing the four letter agreements, it would be more efficient to combine them.

I have added my comments. Note that some language still needs to be developed fully.

We can discuss during our 2:30 call on Friday.

Toni

From: Marleau,Michael L (BPA) - TEP-TPP-1
To: Jusupovic,Jana D (BPA) - TPC-TPP-4; Hargin,Cheryl D (BPA) - FS-MODD
Cc: Timberman,Toni L (BPA) - TSE-TPP-2; Hunter,Kathy D (BPA) - TPW-TPP-4
Subject: RE: Any update on PSANI for FY2015-FY2016-FY2017?
Date: Wednesday, November 26, 2014 10:54:46 AM

Jana,

As far as I know, PSE and SCL have not started any design/construction work on the affected projects. SCL's Bothell-SnoKing Lines 1 & 2 will be designed/constructed in FY16. I can't imagine we'd accrue any project costs from PSE or SCL in FY15.

Thanks,
Mike

From: Jusupovic,Jana D (BPA) - TPC-TPP-4
Sent: Wednesday, November 26, 2014 10:49 AM
To: Hargin,Cheryl D (BPA) - FS-MODD; Marleau,Michael L (BPA) - TEP-TPP-1
Cc: Timberman,Toni L (BPA) - TSE-TPP-2; Hunter,Kathy D (BPA) - FBT-MODD
Subject: FW: Any update on PSANI for FY2015-FY2016-FY2017?
Importance: High

Cheryl,
Great question!
One question from me, if Seattle or Puget plan to spend any money in FY15 but won't bill us for it until 2017/2018 does it matter if we don't have any budget for the work in FY15?

Toni and Michael,
Can you please answer the questions below that I have in red; I would really appreciate the help.

Thank you!

From: Hargin,Cheryl D (BPA) - FS-MODD
Sent: Tuesday, November 25, 2014 3:49 PM
To: Jusupovic,Jana D (BPA) - TPC-TPP-4
Cc: Hunter,Kathy D (BPA) - FBT-MODD
Subject: RE: Any update on PSANI for FY2015-FY2016-FY2017?

Hi Jana,
From the e-mail chain on PSANI it appears that Seattle and Puget will not be sending us progress payment invoices but will be billing us when the work is completed which appears to be in 2017/18. – Correct. However, they will be giving us yearly cost updates. Have they even started the work and will they have spent anything in FY15? – **Michael and Toni**, can you please confirm if Seattle or Puget have done any work thus far on the projects where BPA will cost share in? Do they plan to do any work in FY15? If not, we don't have to worry about accruing anything for FY15. We put $11M into IPR for PSANI - $1M in FY16 and $10M in FY17. There currently is no budget for this work in FY15. We will probably have to start accruing for the costs when we are provided actual cost spend updates. Is there an annual spread of the cost estimate? - **Toni**, have Uzma or John given you any

type of annual cost spread on the projects?

From: Hunter,Kathy D (BPA) - FBT-MODD
Sent: Monday, November 24, 2014 9:28 AM
To: Hargin,Cheryl D (BPA) - FS-MODD
Subject: FW: Any update on PSANI for FY2015-FY2016-FY2017?

FYI

From: Jusupovic,Jana D (BPA) - TPC-TPP-4
Sent: Thursday, November 20, 2014 1:37 PM
To: Hunter,Kathy D (BPA) - FBT-MODD; Marleau,Michael L (BPA) - TEP-TPP-1; Timberman,Toni L (BPA) - TSE-TPP-2
Cc: Hargin,Cheryl D (BPA) - FS-MODD
Subject: RE: Any update on PSANI for FY2015-FY2016-FY2017?

Hi Kathy,

After further discussions that Toni has had with Seattle and Puget, they are requesting to abide by the MOA and request that all payments be paid upon completion of work.
They will give us yearly cost updates in July.
The earliest expected payment for Seattle is 2017, and for Puget is 2018.
As of right now, the projected cost spend for Seattle is still $5.4M and for Puget it's still $5.3M. Total expense cost is $10.7M.
Again they will be giving us cost spend updates on a yearly basis, so I will make sure and keep you updated.

Regarding any expense funds being needed for FY15 or FY16, I don't believe so. None of the projects are projected to be completed in FY15/FY16.

Let me know if you'd like any additional information for the VP meeting?

From: Hunter,Kathy D (BPA) - FBT-MODD
Sent: Monday, November 17, 2014 9:49 AM
To: Marleau,Michael L (BPA) - TEP-TPP-1; Jusupovic,Jana D (BPA) - TPC-TPP-4; Timberman,Toni L (BPA) - TSE-TPP-2
Cc: Hargin,Cheryl D (BPA) - FS-MODD
Subject: RE: Any update on PSANI for FY2015-FY2016-FY2017?

Thanks Mike – how much? And will this work. Will we have work being done in FY2015 that we may be able to accrue for this progress payment?

From: Marleau,Michael L (BPA) - TEP-TPP-1
Sent: Monday, November 17, 2014 9:44 AM
To: Hunter,Kathy D (BPA) - FBT-MODD; Jusupovic,Jana D (BPA) - TPC-TPP-4; Timberman,Toni L (BPA) - TSE-TPP-2
Cc: Hargin,Cheryl D (BPA) - FS-MODD
Subject: RE: Any update on PSANI for FY2015-FY2016-FY2017?

I would anticipate the earliest being FY2016.

From: Hunter,Kathy D (BPA) - FBT-MODD
Sent: Monday, November 17, 2014 9:33 AM
To: Jusupovic,Jana D (BPA) - TPC-TPP-4; Timberman,Toni L (BPA) - TSE-TPP-2; Marleau,Michael L (BPA) - TEP-TPP-1
Cc: Hargin,Cheryl D (BPA) - FS-MODD
Subject: RE: Any update on PSANI for FY2015-FY2016-FY2017?

Meeting with VPs on Nov 24 so really need to give them a heads up of how much and when. Also if we need to accrue anything at the end of fiscal year we really need to know that as well as we may need to adjust budgets

---

From: Jusupovic,Jana D (BPA) - TPC-TPP-4
Sent: Monday, November 17, 2014 9:26 AM
To: Hunter,Kathy D (BPA) - FBT-MODD; Timberman,Toni L (BPA) - TSE-TPP-2; Marleau,Michael L (BPA) - TEP-TPP-1
Subject: FW: Any update on PSANI for FY2015-FY2016-FY2017?
Importance: High

We are still planning on progress payments; we are in the process of finalizing the updated financial terms and conditions language for quarterly progress payments.

Toni or Michael,
When would you expect our first progress payment, 2015/2016?

Thank you.

From: Hunter,Kathy D (BPA) - FBT-MODD
Sent: Monday, November 17, 2014 8:31 AM
To: Jusupovic,Jana D (BPA) - TPC-TPP-4
Subject: Any update on Psani for FY2015-FY2016-FY2017?

Hi Jana

Originally you said we might be doing progress payments on this vs a big lump sum into the out years, where are we at on that!
k

From: Timberman,Toni L (BPA) - TSE-TPP-2
To: King,Robert D (BPA) - TS-DITT-2
Cc: Fitzsimmons,David A (BPA) - TSE-TPP-2
Subject: Heads-up Puget Eastside Project
Date: Wednesday, December 10, 2014 2:51:00 PM

Hi Bob,
Just wanted to give you a heads-up on a hot issue.

In 2011 Hardev worked with Seattle and Puget to develop the PSANI MOA, which provides for each party to do transmission projects in the Puget Sound Area, and sets funding protocol for the projects.

One of the projects contemplated in the MOA was the rebuild of the two SnoKing-Maple Valley lines, to be funded 1/3 by each party.

Puget proposed, in lieu of the rebuild, the "Eastside Project" which is a new Puget transmission line and substation. Puget proposed that BPA and Seattle contribute to the funding of this project, capped at what the contribution would have been for 1/3 the cost of the SnoKing-Maple Valley rebuild. This was accepted and is in the MOA.

BPA, Puget and Seattle have been meeting over the last year to develop a letter agreement to clean up some of the provisions of the MOA – and one part of that agreement is that the BPA $$ that would have been allocated to the Eastside Project would instead be allocated to a different Puget project. The agreement is nearly ready for execution.

A recent discussion between Hardev and the leader of the community group opposed to Puget's Eastside Project is getting attention and Clearing Up called Doug Johnson today for more information.
Please give me a call, or let me know if you have 15 minutes or so for a briefing.

Thanks,
Toni

Toni L. Timberman
Senior Transmission Account Executive | TSE TPP-2
BONNEVILLE POWER ADMINISTRATION
Vancouver, Washington
tltimberman@bpa.gov | P 360-619-6015 | C 360-607-9093

From: Phillips, John M - Transmission
To: Timberman,Toni L (BPA) - TSE-TPP-2
Cc: Jusupovic,Jana D (BPA) - TPC-TPP-4
Subject: RE: proposed language for Hardev clarification to Don Marsh
Date: Wednesday, December 10, 2014 5:53:41 PM

Toni,
I think this looks good and it has the benefit of being true. I'll run it by our Eastside team.
Thanks and take care during the windy weather.
John

From: Timberman,Toni L (BPA) - TSE-TPP-2 [mailto:tltimberman@bpa.gov]
Sent: Wednesday, December 10, 2014 4:37 PM
To: Phillips, John M - Transmission
Cc: Jusupovic,Jana D (BPA) - TPC-TPP-4
Subject: proposed language for Hardev clarification to Don Marsh

John, please let me know if you agree with the proposed Hardev response below.
Thanks,
Toni

Hardev asked me to draft some language so that he can send it to Don Marsh to correct this statement in Don's e-mail:
++++++++++++++++
From Janine Benner's email (the "Sammamish-Lakeside-Talbot project" is Energize Eastside):
Thanks for getting in touch about the Sammamish-Lakeside-Talbot project. As you know, this is a project proposed to be built by Puget Sound Energy. Pursuant to an MOU between BPA, PSE, and Seattle City Light, BPA will pay for 1/3rd of the projected capital cost of the overall project. The cost allocation meets the parameters of FERC order 1000 in which the costs are assigned commensurate with benefits.

This 1/3rd portion was confirmed in a telephone conversation between Don Marsh and Hardev Juj, BPA's VP of Transmission Planning.
++++++++++++++++++++++++
Proposed Hardev clarification:

BPA, Puget and Seattle have been collaborating on a Letter Agreement intended to clarify some of the provisions in the PSANI MOA. Among other things, this draft agreement states the following:

Concerning the Puget Preferred Plan Projects identified in Section 3(b) of the MOA, the parties agree that the BPA funding originally intended for these projects will instead be directed under separate agreement to one or more of the following PSE projects: Whatcom County Transformer. Accordingly, the parties acknowledge that BPA is not involved in any manner or capacity in PSE's Sammamish to Lakeside to Talbot Rebuild Project or its Lakeside 230 kV Transformer Addition Project.

The parties are finalizing the Letter Agreement language and expect to execute it soon.

Toni L. Timberman
Senior Transmission Account Executive | TSE TPP-2
BONNEVILLE POWER ADMINISTRATION
Vancouver, Washington
tltimberman@bpa.gov | P 360-619-6015 | C 360-607-9093

From:	Adams,Hub V (BPA) - LN-7
To:	Baskerville,Sonya L (BPA) - DIN-WASH
Cc:	Timberman,Toni L (BPA) - TSE-TPP-2; Klumpp,Elizabeth C (BPA) - DIR-WSGL
Subject:	RE: Puget Sound Area Projects BPA Background.docx
Date:	Wednesday, December 10, 2014 5:57:03 PM

Toni is the expert on this stuff but I think the answer is a resounding yes. My understanding is they are totally different. Toni can confirm.

-----Original Message-----
From: Baskerville,Sonya L (BPA) - DKN-WASH
Sent: Wednesday, December 10, 2014 5:56 PM
To: Adams,Hub V (BPA) - LN-7
Cc: Timberman,Toni L (BPA) - TSE-TPP-2; Klumpp,Elizabeth C (BPA) - DKR-WSGL
Subject: Re: Puget Sound Area Projects BPA Background.docx

Here is what the fact sheet says:

"Puget Preferred Plan Projects. BPA and Seattle City Light are to each pay to Puget an amount equal to one-third of the adjusted projected capital cost of the Maple Valley to SnoKing Reconductor Project."

Are you saying that this project is not a part of energize eastside?

Sonya Baskerville
BPA National Relations
202.253.7352

----- Original Message -----
From: Adams,Hub V (BPA) - LN-7
Sent: Wednesday, December 10, 2014 08:45 PM
To: Baskerville,Sonya L (BPA) - DKN-WASH
Cc: Timberman,Toni L (BPA) - TSE-TPP-2; Klumpp,Elizabeth C (BPA) - DKR-WSGL
Subject: RE: Puget Sound Area Projects BPA Background.docx

(b) (5) [redacted]

Thanks,
Hub

-----Original Message-----
From: Baskerville,Sonya L (BPA) - DKN-WASH
Sent: Wednesday, December 10, 2014 11:55 AM
To: Timberman,Toni L (BPA) - TSE-TPP-2; Klumpp,Elizabeth C (BPA) - DKR-WSGL; Adams,Hub V (BPA) - LN-7
Subject: Re: Puget Sound Area Projects BPA Background.docx

Okay, so not sure I have an issue on my end. We always were clear in Washington that BPA hadn't made a final decision about any of this, so I'll just update Smith's staff when we're ready to inform about the change of plans. Thanks!

Sonya Baskerville
BPA National Relations
202.253.7352

----- Original Message -----
From: Timberman,Toni L (BPA) - TSE-TPP-2
Sent: Wednesday, December 10, 2014 02:33 PM
To: Baskerville,Sonya L (BPA) - DKN-WASH; Klumpp,Elizabeth C (BPA) - DKR-WSGL; Adams,Hub V (BPA) - LN-7
Subject: RE: Puget Sound Area Projects BPA Background.docx

BPA and Puget and Seattle have been working on a "clarification" letter agreement to the PSANI MOA that, among other things, redirects the BPA funds to other Puget projects. It has not been executed yet.

-----Original Message-----
From: Baskerville,Sonya L (BPA) - DKN-WASH
Sent: Wednesday, December 10, 2014 11:30 AM
To: Klumpp,Elizabeth C (BPA) - DKR-WSGL; Timberman,Toni L (BPA) - TSE-TPP-2; Adams,Hub V (BPA) - LN-7
Subject: RE: Puget Sound Area Projects BPA Background.docx

Looks like maybe there is confusion which needs to be cleared up with the transmission business line. In the note below, it looks like Hardev confirmed the information that Janine used from the fact sheet.
(b) (5) [redacted]

[redacted]

Thanks.

Sonya Baskerville
Manager, National Relations Office
Bonneville Power Administration
1000 Independence Ave., SW, 8G-061
Washington, DC 20585
202-586-5640 (o)
202-253-7352 (c)

-----Original Message-----
From: Klumpp,Elizabeth C (BPA) - DKR-WSGL
Sent: Wednesday, December 10, 2014 1:02 PM
To: Timberman,Toni L (BPA) - TSE-TPP-2; Baskerville,Sonya L (BPA) - DKN-WASH; Adams,Hub V (BPA) - LN-7
Subject: Re: Puget Sound Area Projects BPA Background.docx

Berhanu Tesema in TX was key author of fact sheet. I'm told that Chuck Combs likely reviewed it. Matt Perkins may have helped, but not sure. Doug Marker facilitated the production of this factsheet, but emails have expired as they are past 90 days old.

----- Original Message -----
From: Timberman,Toni L (BPA) - TSE-TPP-2
Sent: Wednesday, December 10, 2014 09:06 AM Pacific Standard Time

To: Klumpp,Elizabeth C (BPA) - DKR-WSGL; Baskerville,Sonya L (BPA) - DKN-WASH; Adams,Hub V (BPA) - LN-7
Subject: RE: Puget Sound Area Projects BPA Background.docx

Which specific attorney?

-----Original Message-----
From: Klumpp,Elizabeth C (BPA) - DKR-WSGL
Sent: Wednesday, December 10, 2014 9:06 AM
To: Timberman,Toni L (BPA) - TSE-TPP-2; Baskerville,Sonya L (BPA) - DKN-WASH; Adams,Hub V (BPA) - LN-7
Subject: Re: Puget Sound Area Projects BPA Background.docx

Office of General Counsel - legal.

----- Original Message -----
From: Timberman,Toni L (BPA) - TSE-TPP-2
Sent: Wednesday, December 10, 2014 08:27 AM Pacific Standard Time
To: Baskerville,Sonya L (BPA) - DKN-WASH; Klumpp,Elizabeth C (BPA) - DKR-WSGL; Adams,Hub V (BPA) - LN-7
Subject: RE: Puget Sound Area Projects BPA Background.docx

Who in OGC?

-----Original Message-----
From: Baskerville,Sonya L (BPA) - DKN-WASH
Sent: Wednesday, December 10, 2014 6:54 AM
To: Klumpp,Elizabeth C (BPA) - DKR-WSGL; Timberman,Toni L (BPA) - TSE-TPP-2; Adams,Hub V (BPA) - LN-7
Subject: Puget Sound Area Projects BPA Background.docx

Here's the fact sheet BPA OGC staff prepared.

Sonya Baskerville
BPA National Relations
202.253.7352

From: Jusupovic,Jana D (BPA) - TPC-TPP-4
To: Johnson,G Douglas (BPA) - DKP-7; Timberman,Toni L (BPA) - TSE-TPP-2; Klumpp,Elizabeth C (BPA) - DIR-WSGL
Subject: RE: request: proposed language for Hardev clarification to Don Marsh
Date: Thursday, December 11, 2014 4:35:54 PM

My apologizes for the delayed response, to many meetings!

Toni regarding your question to me below, the funds budgeted for the PSANI projects are not characterized according to any specific details besides being labeled as funds for "PSANI."
No WO's as of today have been opened for the customer preferred projects.

The only WO's opened are for the BPA preferred projects and they are characterized according to specific tasks and sites.

BPA has not received an invoice from the customer thus far and therefore has made no investment towards Seattle's or Puget's preferred projects.

BPA expects an invoice from both customers in the FY17/FY18 timeframe after all work has been completed. BPA would make sure in each invoice description of costs that there is no reference to the Eastside Project.

I hope that helps.

From: Johnson,G Douglas (BPA) - DKPM-7
Sent: Thursday, December 11, 2014 10:54 AM
To: Timberman,Toni L (BPA) - TSE-TPP-2; Klumpp,Elizabeth C (BPA) - DKR-WSGL; Jusupovic,Jana D (BPA) - TPC-TPP-4
Subject: RE: request: proposed language for Hardev clarification to Don Marsh

(b) (5) [redacted]

From: Timberman,Toni L (BPA) - TSE-TPP-2
Sent: Thursday, December 11, 2014 10:48 AM
To: Johnson,G Douglas (BPA) - DKPM-7; Klumpp,Elizabeth C (BPA) - DKR-WSGL; Jusupovic,Jana D (BPA) - TPC-TPP-4
Subject: RE: request: proposed language for Hardev clarification to Don Marsh

(b) (5) [redacted]

From: Johnson,G Douglas (BPA) - DKPM-7
Sent: Thursday, December 11, 2014 10:48 AM
To: Timberman,Toni L (BPA) - TSE-TPP-2; Klumpp,Elizabeth C (BPA) - DKR-WSGL; Jusupovic,Jana D (BPA) - TPC-TPP-4
Subject: RE: request: proposed language for Hardev clarification to Don Marsh

(b) (5) [redacted]

From: Timberman,Toni L (BPA) - TSE-TPP-2
Sent: Thursday, December 11, 2014 10:18 AM
To: Klumpp,Elizabeth C (BPA) - DKR-WSGL; Jusupovic,Jana D (BPA) - TPC-TPP-4
Cc: Johnson,G Douglas (BPA) - DKPM-7
Subject: RE: request: proposed language for Hardev clarification to Don Marsh

Note that the funding was done very early on in the MOA process, and if there is a specific description associated with it, that could be changed as a result of the Letter Agreement.

From: Klumpp,Elizabeth C (BPA) - DKR-WSGL
Sent: Thursday, December 11, 2014 10:08 AM
To: Timberman,Toni L (BPA) - TSE-TPP-2; Jusupovic,Jana D (BPA) - TPC-TPP-4
Cc: Johnson,G Douglas (BPA) - DKPM-7
Subject: RE: request: proposed language for Hardev clarification to Don Marsh

I can see that it might be impossible to make the funding statement as it could be impossible to distinguish our funding for specific projects within the greater Puget Sound region. I appreciate Jana checking.

If you could share with Mr. Marsh that Hardev will also send a separate email, when language is finalized, to Booga, that would be helpful. Booga, the VP, will forward the direct communication from Hardev to the city council. It will be shared in public. Please tell Mr. Marsh that this is at request of Katherine Taylor, PSE. I believe she is in govt. affairs; her (b) (6) [redacted]

Thanks.

From: Timberman,Toni L (BPA) - TSE-TPP-2
Sent: Thursday, December 11, 2014 9:49 AM
To: Jusupovic,Jana D (BPA) - TPC-TPP-4
Cc: Klumpp,Elizabeth C (BPA) - DKR-WSGL; Johnson,G Douglas (BPA) - DKPM-7
Subject: FW: request: proposed language for Hardev clarification to Don Marsh

Jana, I know we have budgeted for the PSANI projects, but how is the funding characterized? Is there anything that could clearly identify BPA funding Puget's Eastside Project?

Liz, are you suggesting that the language be forwarded to Booga <u>before</u> or <u>after</u> Hardev communicates with Mr. Marsh?

From: Klumpp,Elizabeth C (BPA) - DKR-WSGL
Sent: Thursday, December 11, 2014 9:40 AM
To: Johnson,G Douglas (BPA) - DKPM-7; Timberman,Toni L (BPA) - TSE-TPP-2
Subject: request: proposed language for Hardev clarification to Don Marsh

Just got off the phone with PSE's communications staff who work with Bellevue City Council and the citizens. They are asking if we are comfortable with the two following requests.

1) Inserting this introductory sentence below (I've inserted in red below) if it's accurate. "BPA has not budgeted for funding 1/3 or any of PSE's Energize Eastside project." (They would like some clear statement that we have no financial role.) I know our original plans outlined in the MOA have changed since we signed the MOA. Is it accurate to say we have not budgeted to fund any of this project?"
2) When we have finalized the language that BPA and Hardev support, would Hardev please email that language to Booga (sp?)? Since no one at BPA has been copied on any of these communications between the city council and the citizens, PSE would like to forward communication from Hardev to the city council.

I'm in my office, but please call my cell if we want to discuss their request.

Liz
(b) (6) [redacted]

From: Johnson,G Douglas (BPA) - DKPM-7
Sent: Wednesday, December 10, 2014 4:49 PM
To: Timberman,Toni L (BPA) - TSE-TPP-2; Klumpp,Elizabeth C (BPA) - DKR-WSGL
Subject: RE: proposed language for Hardev clarification to Don Marsh

I think that will work. The only thing we might want to add in the appropriate place is (commonly referred to as Energize Eastside). Once we have final language, I can share with Jude Noland of Clearing Up. I have a call in to Gretchen Aliabadi in PSE's public affairs office. Still have not heard back from here. Thanks for all the help Toni!!

From: Timberman,Toni L (BPA) - TSE-TPP-2
Sent: Wednesday, December 10, 2014 4:40 PM
To: Klumpp,Elizabeth C (BPA) - DKR-WSGL; Johnson,G Douglas (BPA) - DKPM-7
Subject: FW: proposed language for Hardev clarification to Don Marsh

See below –
If John Phillips at Puget approves the proposed clarification, Hardev will send it to Don Marsh. If you believe another response would be more appropriate, please let me know.
Toni

From: Timberman,Toni L (BPA) - TSE-TPP-2
Sent: Wednesday, December 10, 2014 4:37 PM
To: 'john.phillips@pse.com'
Cc: Jusupovic,Jana D (BPA) - TPC-TPP-4
Subject: proposed language for Hardev clarification to Don Marsh

John, please let me know if you agree with the proposed Hardev response below.
Thanks,
Toni

Hardev asked me to draft some language so that he can send it to Don Marsh to correct this statement in Don's e-mail:

++++++++++++++++

From Janine Benner's email (the "Sammamish-Lakeside-Talbot project" is Energize Eastside):

Thanks for getting in touch about the Sammamish-Lakeside-Talbot project. As you know, this is a project proposed to be built by Puget Sound Energy. Pursuant to an MOU between BPA, PSE, and Seattle City Light, BPA will pay for 1/3rd of the projected capital cost of the overall project. The cost allocation meets the parameters of FERC order 1000 in which the costs are assigned commensurate with benefits.

This 1/3rd portion was confirmed in a telephone conversation between Don Marsh and Hardev Juj, BPA's VP of Transmission Planning.

++++++++++++++++++++++++

Proposed Hardev clarification:

BPA, Puget and Seattle have been collaborating on a Letter Agreement intended to clarify some of the provisions in the PSANI MOA. Among other things, this draft agreement states the following:

BPA has not budgeted for funding 1/3 or any of PSE's Energize Eastside project. *Concerning the Puget Preferred Plan Projects identified in Section 3(b) of the MOA, the parties agree that the BPA funding originally intended for these projects will instead be directed under separate agreement to one or more of the following PSE projects: Whatcom County Transformer. Accordingly, the parties acknowledge that BPA is not involved in any manner or capacity in PSE's Sammamish to Lakeside to Talbot Rebuild Project or its Lakeside 230 kV Transformer Addition Project.*

The parties are finalizing the Letter Agreement language and expect to execute it soon.

Toni L. Timberman
Senior Transmission Account Executive | TSE TPP-2
BONNEVILLE POWER ADMINISTRATION
Vancouver, Washington
tltimberman@bpa.gov | P 360-619-6015 | C 360-607-9093

From: Klumpp,Elizabeth C (BPA) - DIR-WSGL
To: Timberman,Toni L (BPA) - TSE-TPP-2
Subject: RE: Does Puget mean PSE or Puget region here? Toni"s comments
Date: Thursday, December 11, 2014 10:50:23 AM

This is clear then because the word Puget below always refers to Puget Sound Energy. Thanks. That helps me.

From: Timberman,Toni L (BPA) - TSE-TPP-2
Sent: Thursday, December 11, 2014 10:48 AM
To: Klumpp,Elizabeth C (BPA) - DKR-WSGL
Subject: RE: Does Puget mean PSE or Puget region here? Toni's comments

Puget Preferred Plan Projects are the Puget projects under the MOA
Seattle Preferred Plan Projects are the Seattle projects under the MOA
Same for BPA
All projects are in the Puget Sound Area.
I am not going to change the italicized language from PSE to Puget because it is actual draft agreement language.

From: Klumpp,Elizabeth C (BPA) - DKR-WSGL
Sent: Thursday, December 11, 2014 10:39 AM
To: Timberman,Toni L (BPA) - TSE-TPP-2
Subject: Does Puget mean PSE or Puget region here? Toni's comments

If the "Puget Preferred Plan Projects" refers to PSE, then fine. However, if the "Puget" refers to the Puget Sound area, then it might be very helpful to insert that Puget refers to the Puget Sound region.

Looks great. Thanks.

From: Timberman,Toni L (BPA) - TSE-TPP-2
Sent: Thursday, December 11, 2014 10:34 AM
To: Klumpp,Elizabeth C (BPA) - DKR-WSGL
Subject: FW: Toni's comments

From: Timberman,Toni L (BPA) - TSE-TPP-2
Sent: Thursday, December 11, 2014 10:17 AM
To: Juj,Hardev S (BPA) - TP-DITT-2
Subject: Toni's comments

Here you go –

From: Juj,Hardev S (BPA) - TP-DITT-2
Sent: Thursday, December 11, 2014 10:08 AM
To: Timberman,Toni L (BPA) - TSE-TPP-2
Subject:

BPA, Puget and Seattle have been collaborating on a Letter Agreement intended to clarify some of the provisions in the MOA related to transmission projects in the Puget Sound area that was executed on January 31, 2012. In the MOA, BPA and Seattle agreed to contribute to the Puget Preferred Plan Projects a maximum of 1/3 the estimated cost of a deferred project, not 1/3 the cost of the Puget projects.

Among other things, this draft Letter Agreement states the following:

Concerning the Puget Preferred Plan Projects identified in Section 3(b) of the MOA, the parties agree that the BPA funding originally intended for these projects will instead be directed under separate agreement to one or more of the following PSE projects: Whatcom County Transformer. Accordingly, the parties acknowledge that BPA is not involved in any manner or capacity in PSE's Sammamish to Lakeside to Talbot Rebuild Project or its Lakeside 230 kV Transformer Addition Project.

The parties are finalizing the Letter Agreement language and expect to execute it soon.

Hardev S. Juj, P.E.
Chief Engineer
VP, Planning and Asset Management
Bonneville Power Administration
(360) 418-8981 (Office)
(b) (6) [redacted]

From: Timberman,Toni L (BPA) - TSE-TPP-2
To: Johnson,G Douglas (BPA) - DKP-7
Subject: RE: request: proposed language for Hardev clarification to Don Marsh
Date: Thursday, December 11, 2014 11:03:00 AM

You need to be talking to Berhanu Tesema in BPA Planning if you want to have this discussion with Clearing Up.

From: Johnson,G Douglas (BPA) - DKPM-7
Sent: Thursday, December 11, 2014 10:54 AM
To: Timberman,Toni L (BPA) - TSE-TPP-2; Klumpp,Elizabeth C (BPA) - DKR-WSGL; Jusupovic,Jana D (BPA) - TPC-TPP-4
Subject: RE: request: proposed language for Hardev clarification to Don Marsh

(b) (5) [redacted]

From: Timberman,Toni L (BPA) - TSE-TPP-2
Sent: Thursday, December 11, 2014 10:48 AM
To: Johnson,G Douglas (BPA) - DKPM-7; Klumpp,Elizabeth C (BPA) - DKR-WSGL; Jusupovic,Jana D (BPA) - TPC-TPP-4
Subject: RE: request: proposed language for Hardev clarification to Don Marsh

(b) (5) [redacted]

From: Johnson,G Douglas (BPA) - DKPM-7
Sent: Thursday, December 11, 2014 10:48 AM
To: Timberman,Toni L (BPA) - TSE-TPP-2; Klumpp,Elizabeth C (BPA) - DKR-WSGL; Jusupovic,Jana D (BPA) - TPC-TPP-4
Subject: RE: request: proposed language for Hardev clarification to Don Marsh

(b) (5) [redacted]

From: Timberman,Toni L (BPA) - TSE-TPP-2
Sent: Thursday, December 11, 2014 10:18 AM
To: Klumpp,Elizabeth C (BPA) - DKR-WSGL; Jusupovic,Jana D (BPA) - TPC-TPP-4
Cc: Johnson,G Douglas (BPA) - DKPM-7
Subject: RE: request: proposed language for Hardev clarification to Don Marsh

Note that the funding was done very early on in the MOA process, and if there is a specific description associated with it, that could be changed as a result of the Letter Agreement.

From: Klumpp,Elizabeth C (BPA) - DKR-WSGL
Sent: Thursday, December 11, 2014 10:08 AM
To: Timberman,Toni L (BPA) - TSE-TPP-2; Jusupovic,Jana D (BPA) - TPC-TPP-4
Cc: Johnson,G Douglas (BPA) - DKPM-7
Subject: RE: request: proposed language for Hardev clarification to Don Marsh

I can see that it might be impossible to make the funding statement as it could be impossible to distinguish our funding for specific projects within the greater Puget Sound region. I appreciate Jana checking.

If you could share with Mr. Marsh that Hardev will also send a separate email, when language is finalized, to Booga, that would be helpful. Booga, the VP, will forward the direct communication from Hardev to the city council. It will be shared in public. Please tell Mr. Marsh that this is at request of Katherine Taylor, PSE. I believe she is in govt. affairs; her
(b) (6) [redacted]

Thanks.

From: Timberman,Toni L (BPA) - TSE-TPP-2
Sent: Thursday, December 11, 2014 9:49 AM
To: Jusupovic,Jana D (BPA) - TPC-TPP-4
Cc: Klumpp,Elizabeth C (BPA) - DKR-WSGL; Johnson,G Douglas (BPA) - DKPM-7
Subject: FW: request: proposed language for Hardev clarification to Don Marsh

Jana, I know we have budgeted for the PSANI projects, but how is the funding characterized? Is there anything that could clearly identify BPA funding Puget's Eastside Project?

Liz, are you suggesting that the language be forwarded to Booga <u>before</u> or <u>after</u> Hardev communicates with Mr. Marsh?

From: Klumpp,Elizabeth C (BPA) - DKR-WSGL
Sent: Thursday, December 11, 2014 9:40 AM
To: Johnson,G Douglas (BPA) - DKPM-7; Timberman,Toni L (BPA) - TSE-TPP-2
Subject: request: proposed language for Hardev clarification to Don Marsh

Just got off the phone with PSE's communications staff who work with Bellevue City Council and the citizens. They are asking if we are comfortable with the two following requests.

1) Inserting this introductory sentence below (I've inserted in red below) if it's accurate. "BPA has not budgeted for funding 1/3 or any of PSE's Energize Eastside project." (They would like some clear statement that we have no financial role.) I know our original plans outlined in the MOA have changed since we signed the MOA. Is it accurate to say we have not budgeted to fund any of this project?"
2) When we have finalized the language that BPA and Hardev support, would Hardev please email that language to Booga (sp?)? Since no one at BPA has been copied on any of these communications between the city council and the citizens, PSE would like to forward communication from Hardev to the city council.

I'm in my office, but please call my cell if we want to discuss their request.

Liz
(b) (6) [redacted]

From: Johnson,G Douglas (BPA) - DKPM-7
Sent: Wednesday, December 10, 2014 4:49 PM
To: Timberman,Toni L (BPA) - TSE-TPP-2; Klumpp,Elizabeth C (BPA) - DKR-WSGL
Subject: RE: proposed language for Hardev clarification to Don Marsh

I think that will work. The only thing we might want to add in the appropriate place is (commonly referred to as Energize Eastside). Once we have final language, I can share with Jude Noland of Clearing Up. I have a call in to Gretchen Aliabadi in PSE's public affairs office. Still have not heard back from here. Thanks for all the help Toni!!

From: Timberman,Toni L (BPA) - TSE-TPP-2
Sent: Wednesday, December 10, 2014 4:40 PM
To: Klumpp,Elizabeth C (BPA) - DKR-WSGL; Johnson,G Douglas (BPA) - DKPM-7
Subject: FW: proposed language for Hardev clarification to Don Marsh

See below –
If John Phillips at Puget approves the proposed clarification, Hardev will send it to Don Marsh. If you believe another response would be more appropriate, please let me know.
Toni

From: Timberman,Toni L (BPA) - TSE-TPP-2
Sent: Wednesday, December 10, 2014 4:37 PM
To: 'john.phillips@pse.com'
Cc: Jusupovic,Jana D (BPA) - TPC-TPP-4
Subject: proposed language for Hardev clarification to Don Marsh

John, please let me know if you agree with the proposed Hardev response below.
Thanks,
Toni

Hardev asked me to draft some language so that he can send it to Don Marsh to correct this statement in Don's e-mail:
++++++++++++++++
From Janine Benner's email (the "Sammamish-Lakeside-Talbot project" is Energize Eastside):
Thanks for getting in touch about the Sammamish-Lakeside-Talbot project. As you know, this is a project proposed to be built by Puget Sound Energy. Pursuant to an MOU between BPA, PSE, and Seattle City Light, BPA will pay for 1/3rd of the projected capital cost of the overall project. The cost allocation meets the parameters of FERC order 1000 in which the costs are assigned commensurate with benefits.

This 1/3rd portion was confirmed in a telephone conversation between Don Marsh and Hardev Juj, BPA's VP of Transmission Planning.
++++++++++++++++++++++++
Proposed Hardev clarification:

BPA, Puget and Seattle have been collaborating on a Letter Agreement intended to clarify some of

the provisions in the PSANI MOA. Among other things, this draft agreement states the following:

BPA has not budgeted for funding 1/3 or any of PSE's Energize Eastside project. *Concerning the Puget Preferred Plan Projects identified in Section 3(b) of the MOA, the parties agree that the BPA funding originally intended for these projects will instead be directed under separate agreement to one or more of the following PSE projects: Whatcom County Transformer. Accordingly, the parties acknowledge that BPA is not involved in any manner or capacity in PSE's Sammamish to Lakeside to Talbot Rebuild Project or its Lakeside 230 kV Transformer Addition Project.*

The parties are finalizing the Letter Agreement language and expect to execute it soon.

Toni L. Timberman
Senior Transmission Account Executive | TSE TPP-2
BONNEVILLE POWER ADMINISTRATION
Vancouver, Washington
tltimberman@bpa.gov | P 360-619-6015 | (b) (6)

From: Jusupovic,Jana D (BPA) - TPC-TPP-4
To: Timberman,Toni L (BPA) - TSE-TPP-2
Subject: RE: Clarififaication PSANI
Date: Thursday, December 11, 2014 11:31:13 AM

That's GREAT news Toni!
Not sure how you did it, but well done!

From: Timberman,Toni L (BPA) - TSE-TPP-2
Sent: Thursday, December 11, 2014 11:12 AM
To: Jusupovic,Jana D (BPA) - TPC-TPP-4
Subject: FW: Clarififaication PSANI

From: Juj,Hardev S (BPA) - TP-DITT-2
Sent: Thursday, December 11, 2014 11:09 AM
To: don.m.marsh@hotmail.com
Cc: 'Gilbertson, Booga K.' (bk.gilbertson@pse.com); Nedrud, Jens V (jens.nedrud@pse.com); Timberman,Toni L (BPA) - TSE-TPP-2; Johnson,G Douglas (BPA) - DKPM-7
Subject: Clarififaication PSANI

Don,

The following paragraphs will clarify what BPA's contribution.

BPA, Puget and Seattle have been collaborating on a Letter Agreement intended to clarify some of the provisions in the MOA related to transmission projects in the Puget Sound area that was executed on January 31, 2012. In the MOA, BPA and Seattle agreed to contribute to the Puget Preferred Plan Projects a maximum of 1/3 the estimated cost of a deferred project, not 1/3 the cost of the Puget projects.

Among other things, this draft Letter Agreement states the following:

Concerning the Puget Preferred Plan Projects identified in Section 3(b) of the MOA, the parties agree that the BPA funding originally intended for these projects will instead be directed under separate agreement to one or more of the following PSE projects: Whatcom County Transformer. Accordingly, the parties acknowledge that BPA is not involved in any manner or capacity in PSE's Sammamish to Lakeside to Talbot Rebuild Project or its Lakeside 230 kV Transformer Addition Project.

The parties are finalizing the Letter Agreement language and expect to execute it soon.

Thanks.

Hardev S. Juj, P.E.
Chief Engineer

VP, Planning and Asset Management
Bonneville Power Administration
(360) 418-8981 (Office)
(b) (6) [redacted]

From: Timberman,Toni L (BPA) - TSE-TPP-2
To: King,Robert D (BPA) - TS-DITT-2
Subject: Re: Clarififaication PSANI
Date: Friday, December 12, 2014 3:33:13 PM

Yes...

From: King,Robert D (BPA) - TS-DITT-2
Sent: Friday, December 12, 2014 01:43 PM Pacific Standard Time
To: Timberman,Toni L (BPA) - TSE-TPP-2
Subject: Fw: Clarififaication PSANI

Is this under control???

From: Baskerville,Sonya L (BPA) - DKN-WASH
Sent: Friday, December 12, 2014 08:08 AM Pacific Standard Time
To: 'john.phillips@pse.com' <john.phillips@pse.com>; Timberman,Toni L (BPA) - TSE-TPP-2; Klumpp,Elizabeth C (BPA) - DKR-WSGL; Adams,Hub V (BPA) - LN-7
Cc: King,Robert D (BPA) - TS-DITT-2; Fitzsimmons,David A (BPA) - TSE-TPP-2
Subject: Re: Clarififaication PSANI

Hello, all. Of course the emails to DC folks have started. It appears that the underlying issue continues to be the group's misunderstanding of what Order 1000 is and isn't. They seem to believe that Order 1000 means there is a federal nexus to the project.

Both DOE and Rep. Smith's staff are sending them to FERC. DOE in particular can't be seen to be stepping into FERC's independent regulatory authority.

Thanks.

Sonya Baskerville
BPA National Relations
202.253.7352

From: Phillips, John M - Transmission [mailto:john.phillips@pse.com]
Sent: Thursday, December 11, 2014 04:04 PM
To: Baskerville,Sonya L (BPA) - DKN-WASH; Timberman,Toni L (BPA) - TSE-TPP-2; Klumpp,Elizabeth C (BPA) - DKR-WSGL; Adams,Hub V (BPA) - LN-7
Cc: King,Robert D (BPA) - TS-DITT-2; Fitzsimmons,David A (BPA) - TSE-TPP-2
Subject: RE: Clarififaication PSANI

Thanks for your support. We appreciate it.

John Phillips
Manager of Transmission Contracts
Electric Transmission
Location: 355 110 Ave NE, Bellevue WA
Phone: (425) 462-3579

From: Baskerville,Sonya L (BPA) - DKN-WASH [mailto:slbaskerville@bpa.gov]
Sent: Thursday, December 11, 2014 11:38 AM
To: Timberman,Toni L (BPA) - TSE-TPP-2; Klumpp,Elizabeth C (BPA) - DKR-WSGL; Adams,Hub V (BPA) - LN-7

Cc: King,Robert D (BPA) - TS-DITT-2; Fitzsimmons,David A (BPA) - TSE-TPP-2; Phillips, John M - Transmission
Subject: RE: Clarififaication PSANI

Thank you! I just talked with Paul Hoover in Adam Smith's office and he was very appreciative that Hardev was doing this. He said that these constituents are just trying to find any way to slow down or delay the Energize Eastside (sorry, John!). He said unfortunately (as we know) this clarification won't keep PSE and Bellevue from hearing about the constituents ever-evolving concerns, because they will continue to look for any angles to thwart this.

Paul said he has been very frank with them that there is little, if any, federal nexus to this. He said he believes they finally have heard him, and now this moving of the funds makes that even clearer.

Thanks.

Sonya Baskerville
Manager, BPA National Relations
1000 Independence Ave, SW
8G-061
Washington, DC 20585
202.586.5640 (o)
(b) (6) [redacted]
slbaskerville@bpa.gov

From: Timberman,Toni L (BPA) - TSE-TPP-2
Sent: Thursday, December 11, 2014 2:11 PM
To: Klumpp,Elizabeth C (BPA) - DKR-WSGL; Baskerville,Sonya L (BPA) - DKN-WASH; Adams,Hub V (BPA) - LN-7
Cc: King,Robert D (BPA) - TS-DITT-2; Fitzsimmons,David A (BPA) - TSE-TPP-2; 'john.phillips@pse.com'
Subject: FW: Clarififaication PSANI

E-mail from Hardev to Don Marsh.

From: Juj,Hardev S (BPA) - TP-DITT-2
Sent: Thursday, December 11, 2014 11:09 AM
To: don.m.marsh@hotmail.com
Cc: 'Gilbertson, Booga K.' (bk.gilbertson@pse.com); Nedrud, Jens V (jens.nedrud@pse.com); Timberman,Toni L (BPA) - TSE-TPP-2; Johnson,G Douglas (BPA) - DKPM-7
Subject: Clarififaication PSANI

Don,

The following paragraphs will clarify what BPA's contribution.

BPA, Puget and Seattle have been collaborating on a Letter Agreement intended to clarify some of the provisions in the MOA related to transmission projects in the Puget Sound area that was executed on January 31, 2012. In the MOA, BPA and Seattle agreed to contribute to the Puget Preferred Plan Projects a maximum of 1/3 the estimated cost of a deferred project, not 1/3 the cost

of the Puget projects.

Among other things, this draft Letter Agreement states the following:

Concerning the Puget Preferred Plan Projects identified in Section 3(b) of the MOA, the parties agree that the BPA funding originally intended for these projects will instead be directed under separate agreement to one or more of the following PSE projects: Whatcom County Transformer. Accordingly, the parties acknowledge that BPA is not involved in any manner or capacity in PSE's Sammamish to Lakeside to Talbot Rebuild Project or its Lakeside 230 kV Transformer Addition Project.

The parties are finalizing the Letter Agreement language and expect to execute it soon.

Thanks.

Hardev S. Juj, P.E.
Chief Engineer
VP, Planning and Asset Management
Bonneville Power Administration
(360) 418-8981 (Office)
(b) (6) [redacted]

From:	Don Marsh
To:	Juj,Hardev S (BPA) - TP-DITT-2
Cc:	""Gilbertson, Booga K.""; "Nedrud, Jens V"; Timberman,Toni L (BPA) - TSE-TPP-2; Johnson,G Douglas (BPA) - DKP-7
Subject:	RE: Clarififaication PSANI
Date:	Friday, December 12, 2014 7:15:57 AM

Hardev,

Thank you for this clarification. As you might have heard, we received an email from Janine Benner at DOE that stated "BPA will pay for 1/3rd of the projected capital cost of the overall project" (referring to Energize Eastside), so we were unfortunately misled.

To avoid any further confusion, it would be helpful if you identified the "deferred project" you mention below. Please let us know your estimate of the dollar amount that will be given to PSE for the Whatcom County Transformer project. Also, can you briefly describe the benefit that BPA will receive related to that project? It seems strange to a layperson that the parties would be so explicit about not compensating for the same project that defers your need. Perhaps you can help me understand that.

Sincerely,
Don Marsh

From: Juj,Hardev S (BPA) - TP-DITT-2 [mailto:hsjuj@bpa.gov]
Sent: Thursday, December 11, 2014 11:09 AM
To: don.m.marsh@hotmail.com
Cc: 'Gilbertson, Booga K.' (bk.gilbertson@pse.com); Nedrud, Jens V (jens.nedrud@pse.com); Timberman,Toni L (BPA) - TSE-TPP-2; Johnson,G Douglas (BPA) - DKPM-7
Subject: Clarififaication PSANI

Don,

The following paragraphs will clarify what BPA's contribution.

BPA, Puget and Seattle have been collaborating on a Letter Agreement intended to clarify some of the provisions in the MOA related to transmission projects in the Puget Sound area that was executed on January 31, 2012. In the MOA, BPA and Seattle agreed to contribute to the Puget Preferred Plan Projects a maximum of 1/3 the estimated cost of a deferred project, not 1/3 the cost of the Puget projects.

Among other things, this draft Letter Agreement states the following:

Concerning the Puget Preferred Plan Projects identified in Section 3(b) of the MOA, the parties agree that the BPA funding originally intended for these projects will instead be directed under separate agreement to one or more of the following PSE projects: Whatcom County Transformer.

Accordingly, the parties acknowledge that BPA is not involved in any manner or capacity in PSE's Sammamish to Lakeside to Talbot Rebuild Project or its Lakeside 230 kV Transformer Addition Project.

The parties are finalizing the Letter Agreement language and expect to execute it soon.

Thanks.

Hardev S. Juj, P.E.
Chief Engineer
VP, Planning and Asset Management
Bonneville Power Administration
(360) 418-8981 (Office)
(b) (6)

From: Juj,Hardev S (BPA) - TP-DITT-2
To: Don Marsh
Cc: BMiyake@bellevuewa.gov; MBrennan@bellevuewa.gov; NMatz@bellevuewa.gov; "Energize Eastside -- mail --"; "Pravitz, Keri"; CLee@bellevuewa.gov; CBalducci@bellevuewa.gov; KRWallace@bellevuewa.gov; JChelminiak@bellevuewa.gov; j.robertson@bellevuewa.gov; LRobinson@bellevuewa.gov; JStokes@bellevuewa.gov; Timberman,Toni L (BPA) - TSE-TPP-2; Johnson,G Douglas (BPA) - DKP-7; Tesema,Berhanu K (BPA) - TPP-OPP-3
Subject: RE: Follow up on Independent Technical Analyst
Date: Monday, December 15, 2014 3:09:29 PM

Don,

The Columbia Grid (CG) report has all the information you listed. CG should be the point of the contact for technical issues as they are the owner of the report. Questions related to East Side line should be directed to Puget Sound Energy. Thanks

---

From: Don Marsh [mailto:don.m.marsh@hotmail.com]
Sent: Sunday, December 14, 2014 12:29 PM
To: Juj,Hardev S (BPA) - TP-DITT-2
Cc: BMiyake@bellevuewa.gov; MBrennan@bellevuewa.gov; NMatz@bellevuewa.gov; 'Energize Eastside -- mail --'; 'Pravitz, Keri'; CLee@bellevuewa.gov; CBalducci@bellevuewa.gov; KRWallace@bellevuewa.gov; JChelminiak@bellevuewa.gov; j.robertson@bellevuewa.gov; LRobinson@bellevuewa.gov; JStokes@bellevuewa.gov
Subject: RE: Follow up on Independent Technical Analyst

Dear Mr. Juj,

Thank you for your clarifying email of December 11. I apologize for my misunderstanding of BPA's role in PSE's Energize Eastside project.

It would be helpful if you would provide a little more detail in regard to the following questions:

1. Which of BPA's projects is deferred by Energize Eastside? According to Jens Nedrud, Energize Eastside's Senior Project Manager, the deferred project is an upgrade of a transmission line between SnoKing and Maple Valley, with an estimated cost of $18 million. However, in BPA's 2014 WECC Progress Report, there is a project "on hold" that appears to be a second 500 kV line between Monroe and Echo Lake. Is one of these the deferred project you mentioned?

2. Can you provide a rough dollar estimate of BPA's compensation to PSE, and a brief description of how that amount will be calculated?

3. Your email says that BPA would contribute to a different PSE project in Whatcom county. Is that project related in some way to BPA's deferred project? If not, can you verify that this is normal industry practice to contribute to unrelated projects as compensation for a deferred project? I am concerned by this, because it seems more fair and transparent to directly reduce the cost of Energize Eastside to PSE's customers by the amount contributed by BPA. I would like to understand if there are advantages to this different way of handling the compensation.

We appreciate your assistance in helping us understand these complicated projects.

Sincerely,
Don Marsh

From: Pravitz, Keri [mailto:Keri.Pravitz@pse.com]
Sent: Thursday, December 11, 2014 3:33 PM
To: CLee@bellevuewa.gov; don.m.marsh@hotmail.com; CBalducci@bellevuewa.gov; KRWallace@bellevuewa.gov; JChelminiak@bellevuewa.gov; j.robertson@bellevuewa.gov; LRobinson@bellevuewa.gov; JStokes@bellevuewa.gov
Cc: BMiyake@bellevuewa.gov; MBrennan@bellevuewa.gov; NMatz@bellevuewa.gov; Energize Eastside -- mail --
Subject: RE: Follow up on Independent Technical Analyst

Don and Councilmembers,

A claim was made Monday night and in the email below sent to us by Don Marsh that BPA is paying a third of the cost of the Energize Eastside project. That is incorrect.

Attached is an email from Hardev Juj, Vice President of Transmission Planning and Asset Management at BPA, to Don Marsh, resident of Bellevue, clarifying the agreement between BPA, SCL and PSE. In short, BPA will not be funding any of the cost of the Energize Eastside project (which Mr. Juj refers to as "PSE's Sammamish to Lakeside to Talbot Rebuild Project or its Lakeside 230 kV Transformer Addition Project.").

Sincerely,

Keri Pravitz
Community Projects Manager
PUGET SOUND ENERGY

From:	Christen,Camille A (BPA) - LT-7
To:	Timberman,Toni L (BPA) - TSE-TPP-2
Cc:	Jusupovic,Jana D (BPA) - TPC-TPP-4; Marleau,Michael L (BPA) - TEP-TPP-1; Moffett,Justin T (BPA) - KEC-4; Adams,Hub V (BPA) - LN-7
Subject:	RE: PSANI MOA Letter Agreement question
Date:	Wednesday, December 31, 2014 1:41:21 PM
Attachments:	16060 PSANI MOA LTR AGMT 12 31 TT cc edits 141231.doc

Hi Toni,
I talked with Hub about this, and we provided a suggestion in the attached. Since I haven't been involved in this up to this point I had a couple of other general questions in the attached as well.

Thanks,
Camille

From: Timberman,Toni L (BPA) - TSE-TPP-2
Sent: Wednesday, December 31, 2014 12:43 PM
To: Christen,Camille A (BPA) - LT-7
Cc: Jusupovic,Jana D (BPA) - TPC-TPP-4; Marleau,Michael L (BPA) - TEP-TPP-1; Moffett,Justin T (BPA) - KEC-4
Subject: PSANI MOA Letter Agreement question

Hi Camille,

Attached is the latest draft of the PSANI MOA Letter Agreement, which is clarifying some of the language in the MOA. The MOA is also attached for your reference.

Please take a look and comment generally on the letter, but my specific question is related to the highlighted sentence added by Seattle.

Seattle's concern is that, because Seattle is using high-temperature conductor for their portion of the Bothell-SnoKing project, they know that their structures do not need to be replaced. BPA is using standard conductor, which SCL believes will place additional loading on their structure where the two types of conductor meet and might require its replacement. Seattle wants assurance from BPA that if the SCL structure needs to be replaced and this drives the project into NEPA, BPA is responsible for all additional costs related to this.

I understand Seattle's concern, but BPA does not know yet whether Seattle's structure will need to be replaced. We need to get this letter agreement signed.

Please suggest language that will satisfy Seattle and is acceptable to BPA.

Hub Adams was very involved in these discussions at the beginning because he was contacted by the Puget attorney. He is no longer involved, but might be able to suggest language that works.

Thanks,
Toni

Toni L. Timberman
Senior Transmission Account Executive | TSE TPP-2
BONNEVILLE POWER ADMINISTRATION
Vancouver, Washington
tltimberman@bpa.gov | P 360-619-6015 | (b) (6)

Department of Energy

Bonneville Power Administration
P.O. Box 61409
Vancouver, WA 98666-1409

TRANSMISSION SERVICES

January XX, 2015

In reply refer to: TSE/TPP-2

Contract No. 14TX-16060
Letter Agreement

Ms. Booga Gilbertson
Vice President Operations Services
Puget Sound Energy, Inc.
P.O. Box 90868
Bellevue, WA 98009-0868

Mr. Phillip West
Customer Service Energy Officer
The City of Seattle, City Light Department
700 Fifth Avenue, Suite 2822
Seattle, WA 98104-5031

Dear Ms. Gilbertson and Mr. West:

The Bonneville Power Administration (BPA), Puget Sound Energy, Inc., (PSE) and The City of Seattle, City Light Department (SCL) are parties to the Memorandum of Agreement (MOA), Contract No. 11TX-15450, relating to the Preferred Puget Sound Area Plan of Service Projects and Cost Allocation. The parties to the MOA are currently in the initial stages of implementing their respective obligations under the MOA. As this has progressed, certain aspects of the MOA were identified that the parties believe need to be clarified.

This Letter Agreement describes these MOA clarifications to which the parties have agreed. As a convenience to the parties, the following clarifications to the MOA are organized by the section of the MOA in which they are located.

Comment [CC1]: Why isn't this being done as an amendment to the MOA? For BPA's own internal record-keeping, I assume hat this will be linked to he MOA in CCM?

MOA Section 3

Concerning the Covington 500 kV Transformer Addition Project identified in Section 3(a) of the MOA, the parties agree that the transformer that would have been added at the Covington Substation will instead be added at the Raver Substation. There is no change in financial responsibility under the MOA due to this relocation.

Concerning the Puget Preferred Plan Projects identified in Section 3(b) of the MOA, the parties agree that the BPA funding originally intended for these projects will instead be directed under separate agreement to Puget's Whatcom County Transformer project. Accordingly, the parties acknowledge that BPA is not involved in any manner or capacity in PSE's Sammamish to Lakeside to Talbot Rebuild Project or its Lakeside 230 kV Transformer Addition Project.

Comment [CC2]: Just want to confirm--the parties are intending to enter into another agreement that addresses his specifically?

Concerning the Puget Preferred Plan Projects identified in Section 3(b) of the MOA, the parties agree that the SCL funding originally intended for these projects will be directed to the Lakeside 230 kV Transformer Addition Project. Accordingly, the parties acknowledge that SCL is not involved in any manner or capacity in PSE's Sammamish to Lakeside to Talbot Rebuild Project.

Concerning the Bothell to SnoKing Reconductor Project identified in Section 3(c) of the MOA, this project was identified in the MOA as an SCL project. However, during subsequent discussions it was discovered that BPA owns the first ½ mile of these lines on the SnoKing end. The parties therefore agree that BPA will rebuild its owned portion of these lines at its cost, including any necessary replacement of equipment within SnoKing Substation associated with these lines. In addition, BPA will be responsible for any replacement of SCL towers that may be necessary at the point of ~~BPA work will mitigate any additional scope at the~~ interconnection between the BPA rebuild project and the SCL reconductor project.

MOA Section 7

Section 7, Payment Schedule, of the MOA states that cost share payments under the MOA will be made at the completion of individual projects, but also provides that the parties will subsequently agree to the actual method and schedule for these payments. The parties now recognize that waiting until the completion of a project before exchanging funds is not the preferred course of action, given the potential for multiple year delays for completion of a project. According, the parties agree to the following alternative billing provisions:

1. Each party's cost obligation for performance of the duties associated with construction of each Preferred Plan Project shall be as specified in Sections 4 and 5 of the MOA. The cost of performing such duties shall be the actual cost of doing the work including overheads.

2. SCL Preferred Plan Projects

   Upon completion of the SCL projects, SCL shall submit final invoices to BPA and Puget associated with construction of the SCL Preferred Plan Projects. BPA and PSE shall remit payment to SCL within 30 days following receipt of the invoices.
   (a) SCL shall notify BPA and Puget as soon as practicable, at any time during the course of the project, SCL project estimates are exceeding the estimates described in Section 4 (b) of the MOA. Pursuant to Section 5. SCL will provide supporting documentation showing estimate details.
   (b) Updated Projected completion for all SCL Preferred Plan Projects is 2017, applicable to section 3 of the MOA.

3. Puget Preferred Plan Projects

   (a) Upon completion of the Puget Projects, Puget shall submit an invoice or payment to SCL for the SCL cost obligations associated with construction of the Puget Preferred Plan Projects.
   (b) Updated Projected Completion for all PSE Preferred Plan Projects is (2018?), applicable to section 3 of the MOA.

4. Billing Addresses

   Bonneville Power Administration
   ATTN:
   P.O. Box 61409
   Vancouver, WA 98666-1409

Puget Sound Energy
ATTN:
Address
City/State/Zip

The City of Seattle, City Light Department
ATTN:
Address
City/State/Zip

MOA Section 8

Concerning the description of National Environmental Policy Act (NEPA) considerations in Section 8 of the MOA, the parties acknowledge that BPA, as a Federal agency, has certain obligations and responsibilities under NEPA and other federal laws (collectively the NEPA review process) that it must fulfill before it can make a final decision concerning whether to participate in implementation of certain of the Preferred Plan Projects described in Section 3 of the MOA and the capital cost allocation described in Sections 4 and 5 of the MOA. The parties agree that nothing in the MOA shall be construed as obligating or committing BPA to make a final decision concerning any of the Preferred Plan Projects and capital cost allocation before completing the NEPA review process. In addition, BPA reserves the right to determine the appropriate NEPA and other environmental compliance strategies for its actions under the MOA, and to choose any alternatives considered in the NEPA process, including the no-action alternative.

Furthermore, the parties acknowledge and agree that while the MOA identifies a number of Preferred Plan Projects to be undertaken by the parties, each of these projects could proceed independently from the others and that no single project is contingent or dependent upon another in the goal of relieving transmission congestion in the Puget Sound Area.

Please sign all originals of this Letter Agreement, return the remaining- originals to my attention at one of the following addresses at your earliest convenience, but not later than Close of Business on January XX, 2015. BPA will issue fully executed agreements to each party:

First Class Mail	Overnight Delivery Service
Bonneville Power Administration	Bonneville Power Administration
Mail Stop: TSE/TPP-2	Mail Stop: TSE/TPP-2
P.O. Box 61409	7500 NE 41st Street – Suite 130
Vancouver, WA 98666-1409	Vancouver, WA 98662

BPA will ensure that Puget and SCL have a full set of original signature pages.

If you have any questions, please call me at (360) 619-6015.

Sincerely,

Toni L. Timberman
Senior Transmission Account Executive
Transmission Sales

Comment [CC3]: If Hardev and SCL and PSE executives signed the original MOA, why are hey not signing this document which is meant to clarify it?

CONCUR:

PUGET SOUND ENERGY, INC.

By: _____

Name: _____
(Print/Type)

Title: _____

Date: _____

THE CITY OF SEATTLE,
CITY LIGHT DEPARTMENT

By: _____

Name: _____
(Print/Type)

Title: _____

Date: _____

From: Timberman,Toni L (BPA) - TSE-TPP-2
To: Christen,Camille A (BPA) - LT-7
Subject: RE: PSANI MOA Update
Date: Tuesday, January 06, 2015 1:39:00 PM

Yes – I will forward to him.

-----Original Appointment-----
From: Christen,Camille A (BPA) - LT-7
Sent: Tuesday, January 06, 2015 12:40 PM
To: Timberman,Toni L (BPA) - TSE-TPP-2
Subject: Accepted: PSANI MOA Update
When: Wednesday, January 14, 2015 2:00 PM-3:00 PM (UTC-08:00) Pacific Time (US & Canada).
Where: TPP 293 - Phone Bridge Info below

Thanks Toni. Can Hub Adams be invited to this as well?

Thanks.

From: Siddiqi, Uzma
To: Marleau,Michael L (BPA) - TEP-TPP-1
Cc: Lin, Jimmy; Ogi, Irving; Risch, Bob; Dorf, Angela; Timberman,Toni L (BPA) - TSE-TPP-2
Subject: RE: BPA"s BO-SK Line Rebuild
Date: Thursday, January 08, 2015 1:53:18 PM

Mike,
Let me know a few dates and times and I can check availability.
Uzma

From: Marleau,Michael L (BPA) - TEP-TPP-1 [mailto:mlmarleau@bpa.gov]
Sent: Thursday, January 08, 2015 1:52 PM
To: Siddiqi, Uzma
Cc: Lin, Jimmy; Ogi, Irving; Risch, Bob; Dorf, Angela; Timberman,Toni L (BPA) - TSE-TPP-2
Subject: RE: BPA's BO-SK Line Rebuild

Hi Uzma, the contract is almost in place. I would like to meet with everyone on site towards the end of this month. Would that work for your?

Thanks,
Mike

From: Siddiqi, Uzma [mailto:Uzma.Siddiqi@seattle.gov]
Sent: Thursday, January 08, 2015 1:44 PM
To: Marleau,Michael L (BPA) - TEP-TPP-1
Cc: Lin, Jimmy; Ogi, Irving; Risch, Bob; Dorf, Angela; Timberman,Toni L (BPA) - TSE-TPP-2
Subject: BPA's BO-SK Line Rebuild

Mike,
Happy New Year!

I was just reviewing some files and came across a plan for SCL and BPA to get together to have a technical discussion about the BPA BO-SK line rebuild. (I believe you were waiting until you had an engineering contractor on board.)

Are we ready to schedule the meeting?

Thanks,
Uzma

From: Timberman,Toni L (BPA) - TSE-TPP-2
To: "Siddiqi, Uzma"
Subject: RE: SCL-BPA Stuff
Date: Thursday, January 08, 2015 2:12:00 PM
Attachments: 10TX-14661_CRS_89239_Image.pdf
RE Removal of Bothell-SnoKing RASSPS equipment.msg
16060 PSANI MOA LTR AGMT 12 31 TT.doc

Hi Uzma,

Happy New Year to you!

Regarding the PSANI Letter Agreements, I will give you a call this afternoon to discuss. I have attached the draft I worked on a bit this morning.

Regarding TP for Metaline Falls Tap line, I know that question has been asked of our reliability staff, but I will follow up again.

Regarding the Bothell-SnoKing RAS agreement, the agreement expired on April 1, 2014. Please see November e-mail exchange attached. BPA will update Seattle following the WECC RASRS meeting this spring.

Talk to you soon,
Toni

From: Siddiqi, Uzma [mailto:Uzma.Siddiqi@seattle.gov]
Sent: Thursday, January 08, 2015 1:41 PM
To: Timberman,Toni L (BPA) - TSE-TPP-2
Subject: SCL-BPA Stuff

Toni,

Hope the new year is going well for you. I'm hoping to get a few minutes of your time on the 29th. Topics I'd like to discuss with you:

1. Next steps for the PSANI letter agreements
2. Confirmation of who is the TP for the Metaline Falls line
3. Status of BPA's BO-SK RAS letter. (Current one expires on March 31. 2015) I believe the WECC RAS group is meeting in mid-April in SLC. So I was thinking BPA could send SCL a letter indicating intent with a clause that says that you will let us know if the plan doesn't go forth

We could schedule a BPAT-SCLT meeting if you want to have this discussion more formally.

Thanks!
Uzma

Department of Energy

Bonneville Power Administration
P.O. Box 61409
Vancouver, WA 98666-1409

TRANSMISSION SERVICES

March 19, 2014

In reply refer to: TSE/TPP-2
Mr. Tuan Tran, P.E.
Director, Energy Delivery Engineering
City of Seattle, City Light Department
P.O. Box 34023
Seattle, WA 98124-4023

Dear Mr. Tran:

On February 23, 2010, The Bonneville Power Administration (BPA) and the City of Seattle, City Light Department (Seattle) executed an agreement, BPA Contract No. 10TX-14661 (Agreement), providing for the installation of a Special Protection Scheme at SnoKing on the Bothell-SnoKing #1 and #2 230 kV lines. Because the Bothell terminal of these lines is owned by Seattle, BPA was requesting Seattle's permission to operate the SPS. The Agreement was subsequently extended for one year, and expires on April 1, 2014.

BPA and Seattle have agreed that the Agreement will not be extended. As of April 1, 2014, BPA will place the Bothell-SnoKing SPS in abeyance and it will not be armed.

The Agreement will be re-considered by the parties if circumstances change and it appears that arming the scheme is required for system reliability. A decision regarding whether the equipment should be removed or if it will again be put in service will be made no later than April 1, 2015, and communicated between both parties.

If you have any questions regarding this, please contact Daniel Kuraspediani, BPA Technical Operations, at (360) 418-2148, or me, at (360) 619-6015.

Sincerely,

Toni L. Timberman

Toni L. Timberman
Senior Transmission Account Executive
Transmission Sales

MAR 21 2014

cc:
Uzma Siddiqi, City of Seattle, City Light Department
Laurie Hammack, City of Seattle, City Light Department
George Grepo, City of Seattle, City Light Department
Desmond Chan, City of Seattle, City Light Department
Stephanie Lu, City of Seattle, City Light Department
Robert Jones, City of Seattle, City Light Department
Michael Watkins, City of Seattle, City Light Department
Hao Li, City of Seattle, City Light Department

bcc:

A. Chan – LT - 7
J.Kerr – TOT/DITT-1
D.Kuraspediani – TOT/DITT - 2
T. Timberman - TSE/TPP-2
P. Gibson – TSES/TPP-2
Official File – TSE/TPP-2 (TM-11 City of Seattle, City Light Department)

TLTimberman:6015: 3/12/2014 (W:\TM_WG\ACCTEXEC\Timberman\Customers\Seattle\Bothell Snowking RAS Letter.doc)

From: Siddiqi, Uzma
To: Timberman,Toni L (BPA) - TSE-TPP-2
Subject: RE: Removal of Bothell-SnoKing RAS/SPS equipment
Date: Monday, November 10, 2014 8:41:56 AM

Sounds okay.
Thanks,
Uzma

From: Timberman,Toni L (BPA) - TSE-TPP-2 [mailto:tltimberman@bpa.gov]
Sent: Friday, November 07, 2014 3:19 PM
To: Siddiqi, Uzma
Subject: FW: Removal of Bothell-SnoKing RAS/SPS equipment

BPA has consensus from Planning and TOT that the scheme can be retired. The scheme is presently in abeyance. Therefore, we will plan on presenting its removal at the Spring 2015 WECC RASRS meeting in April or May. As soon as that approval is reached, we can cut out the circuits, and begin the process of removal. TOT/RAS coordinates this portion of the process:

1) Have the affected Dispatcher Standing Order updated
2) Have TOS remove the screens and any affected IPS
3) Have equipment retired/removed—the timing and whether equipment is retired in place would likely be decided by RAS Design. I will pursue this, as well as getting a Work Order (the original PRD is 288309).

The upshot is that the scheme will not be used after May, 2015.

Department of Energy

Bonneville Power Administration
P.O. Box 61409
Vancouver, WA 98666-1409

TRANSMISSION SERVICES

January XX, 2015

In reply refer to: TSE/TPP-2

Contract No. 14TX-16060
Letter Agreement

Ms. Booga Gilbertson
Vice President Operations Services
Puget Sound Energy, Inc.
P.O. Box 90868
Bellevue, WA 98009-0868

Mr. Phillip West
Customer Service Energy Officer
The City of Seattle, City Light Department
700 Fifth Avenue, Suite 2822
Seattle, WA 98104-5031

Dear Ms. Gilbertson and Mr. West:

The Bonneville Power Administration (BPA), Puget Sound Energy, Inc., (PSE) and The City of Seattle, City Light Department (SCL) are parties to the Memorandum of Agreement (MOA), Contract No. 11TX-15450, relating to the Preferred Puget Sound Area Plan of Service Projects and Cost Allocation. The parties to the MOA are currently in the initial stages of implementing their respective obligations under the MOA. As this has progressed, certain aspects of the MOA were identified that the parties believe need to be clarified.

This Letter Agreement describes these MOA clarifications to which the parties have agreed. As a convenience to the parties, the following clarifications to the MOA are organized by the section of the MOA in which they are located.

MOA Section 3

Concerning the Covington 500 kV Transformer Addition Project identified in Section 3(a) of the MOA, the parties agree that the transformer that would have been added at the Covington Substation will instead be added at the Raver Substation. There is no change in financial responsibility under the MOA due to this relocation.

Concerning the Puget Preferred Plan Projects identified in Section 3(b) of the MOA, the parties agree that the BPA funding originally intended for these projects will instead be directed under separate agreement to Puget's Whatcom County Transformer project. Accordingly, the parties acknowledge that BPA is not involved in any manner or capacity in PSE's Sammamish to Lakeside to Talbot Rebuild Project or its Lakeside 230 kV Transformer Addition Project.

Concerning the Puget Preferred Plan Projects identified in Section 3(b) of the MOA, the parties agree that the SCL funding originally intended for these projects will be directed to the Lakeside 230 kV Transformer Addition Project. Accordingly, the parties acknowledge that SCL is not involved in any manner or capacity in PSE's Sammamish to Lakeside to Talbot Rebuild Project.

Concerning the Bothell to SnoKing Reconductor Project identified in Section 3(c) of the MOA, this project was identified in the MOA as an SCL project. However, during subsequent discussions it was discovered that BPA owns the first ½ mile of these lines on the SnoKing end. The parties therefore agree that BPA will rebuild its owned portion of these lines at its cost, including any necessary replacement of equipment within SnoKing Substation associated with these lines. BPA will mitigate any additional scope at the interconnection between the BPA rebuild project and the SCL reconductor project.

MOA Section 7

Section 7, Payment Schedule, of the MOA states that cost share payments under the MOA will be made at the completion of individual projects, but also provides that the parties will subsequently agree to the actual method and schedule for these payments. The parties now recognize that waiting until the completion of a project before exchanging funds is not the preferred course of action, given the potential for multiple year delays for completion of a project. According, the parties agree to the following alternative billing provisions:

1. Each party's cost obligation for performance of the duties associated with construction of each Preferred Plan Project shall be as specified in Sections 4 and 5 of the MOA. The cost of performing such duties shall be the actual cost of doing the work including overheads.

2. SCL Preferred Plan Projects

   Upon completion of the SCL projects, SCL shall submit final invoices to BPA and Puget associated with construction of the SCL Preferred Plan Projects. BPA and PSE shall remit payment to SCL within 30 days following receipt of the invoices.

   (a) SCL shall notify BPA and Puget as soon as practicable, at any time during the course of the project, SCL project estimates are exceeding the estimates described in Section 4 (b) of the MOA.

   (b) Pursuant to Section 5. SCL will provide supporting documentation showing estimate details.

   (c) Updated Projected Completion for all SCL Preferred Plan Projects is 2017, applicable to section 3 of the MOA.

3. Puget Preferred Plan Projects

   (a) Upon completion of the Puget Projects, Puget shall submit an invoice or payment to SCL for the SCL cost obligations associated with construction of the Puget Preferred Plan Projects.

   (b) Updated Projected Completion for all PSE Preferred Plan Projects is (2018?), applicable to section 3 of the MOA.

4. Billing Addresses

   Bonneville Power Administration
   ATTN:

P.O. Box 61409
Vancouver, WA 98666-1409

Puget Sound Energy
ATTN:
Address
City/State/Zip

The City of Seattle, City Light Department
ATTN:
Address
City/State/Zip

MOA Section 8

Concerning the description of National Environmental Policy Act (NEPA) considerations in Section 8 of the MOA, the parties acknowledge that BPA, as a Federal agency, has certain obligations and responsibilities under NEPA and other federal laws (collectively the NEPA review process) that it must fulfill before it can make a final decision concerning whether to participate in implementation of certain of the Preferred Plan Projects described in Section 3 of the MOA and the capital cost allocation described in Sections 4 and 5 of the MOA. The parties agree that nothing in the MOA shall be construed as obligating or committing BPA to make a final decision concerning any of the Preferred Plan Projects and capital cost allocation before completing the NEPA review process. In addition, BPA reserves the right to determine the appropriate NEPA and other environmental compliance strategies for its actions under the MOA, and to choose any alternatives considered in the NEPA process, including the no-action alternative.

Furthermore, the parties acknowledge and agree that while the MOA identifies a number of Preferred Plan Projects to be undertaken by the parties, each of these projects could proceed independently from the others and that no single project is contingent or dependent upon another in the goal of relieving transmission congestion in the Puget Sound Area.

Please sign all originals of this Letter Agreement, return the remaining originals to my attention at one of the following addresses at your earliest convenience, but not later than Close of Business on January XX, 2015. BPA will issue fully executed agreements to each party:

First Class Mail	Overnight Delivery Service
Bonneville Power Administration	Bonneville Power Administration
Mail Stop: TSE/TPP-2	Mail Stop: TSE/TPP-2
P.O. Box 61409	7500 NE 41st Street – Suite 130
Vancouver, WA 98666-1409	Vancouver, WA 98662

BPA will ensure that Puget and SCL have a full set of original signature pages.

If you have any questions, please call me at (360) 619-6015.

Sincerely,

Toni L. Timberman
Senior Transmission Account Executive
Transmission Sales

CONCUR:

PUGET SOUND ENERGY, INC.

By: _____

Name: _____
(Print/Type)

Title: _____

Date: _____

THE CITY OF SEATTLE,
CITY LIGHT DEPARTMENT

By: _____

Name: _____
(Print/Type)

Title: _____

Date: _____

From:	Timberman,Toni L (BPA) - TSE-TPP-2
To:	"Uzma Siddiqi (uzma.siddiqi@seattle.gov)"; "John Phillips"
Subject:	final draft PSANI MOA Letter Agreement
Date:	Thursday, February 12, 2015 3:46:00 PM
Attachments:	16060 PSANI MOA LTR AGMT Feb 12 2015 TT CLEAN.doc 16060 PSANI MOA LTR AGMT Feb 12 2015 TT.doc

---

Hi Uzma and John,

Attached are a redline and clean version of the final draft of the PSANI MOA Letter Agreement.

Please take a look and let me know if you have any comments.

Additionally, please fill in the billing address for your company.

Note that we might need to change the contract number from 14 TX___ to 15 TX

And, I am still debating whether I should sign this or Hardev. It seems odd to have me signing along with Booga and Phil when Hardev signed the original.

I will try to find out when their next meeting is and maybe we can send the copies for signature and they can all sign during the meeting.

Toni L. Timberman
Senior Transmission Account Executive | TSE TPP-2
BONNEVILLE POWER ADMINISTRATION
Vancouver, Washington
tltimberman@bpa.gov | P 360-619-6015 | (b) (6)

Department of Energy

Bonneville Power Administration
P.O. Box 61409
Vancouver, WA 98666-1409

TRANSMISSION SERVICES

February XX, 2015

In reply refer to: TSE/TPP-2

Contract No. 14TX-16060
Letter Agreement

Ms. Booga Gilbertson
Vice President Operations Services
Puget Sound Energy, Inc.
P.O. Box 90868
Bellevue, WA 98009-0868

Mr. Phillip West
Customer Service Energy Officer
The City of Seattle, City Light Department
700 Fifth Avenue, Suite 2822
Seattle, WA 98104-5031

Dear Ms. Gilbertson and Mr. West:

The Bonneville Power Administration (BPA), Puget Sound Energy, Inc., (PSE) and The City of Seattle, City Light Department (SCL) are parties to the Memorandum of Agreement (MOA), Contract No. 11TX-15450, relating to the Preferred Puget Sound Area Plan of Service Projects and Cost Allocation. The parties to the MOA are currently in the initial stages of implementing their respective obligations under the MOA. As this has progressed, certain aspects of the MOA were identified that the parties believe need to be clarified.

This Letter Agreement describes these MOA clarifications to which the parties have agreed. As a convenience to the parties, the following clarifications to the MOA are organized by the section of the MOA in which they are located.

MOA Section 3

Concerning the Covington 500 kV Transformer Addition Project identified in Section 3(a) of the MOA, the parties agree that the transformer that would have been added at the Covington Substation will instead be added at the Raver Substation. There is no change in financial responsibility under the MOA due to this relocation.

Concerning the Puget Preferred Plan Projects identified in Section 3(b) of the MOA, the parties agree that the BPA funding originally intended for these projects will instead be directed under separate agreement to Puget's Whatcom County Transformer project. Accordingly, the parties acknowledge that BPA is not involved in any manner or capacity in PSE's Sammamish to Lakeside to Talbot Rebuild Project or its Lakeside 230 kV Transformer Addition Project.

Concerning the Bothell to SnoKing Reconductor Project identified in Section 3(c) of the MOA, this project was identified in the MOA as an SCL project. However, during subsequent discussions it was discovered that BPA owns the first ½ mile of these lines on the SnoKing end. The parties therefore agree that BPA will rebuild its owned portion of these lines at its cost, including any necessary replacement of

equipment within SnoKing Substation associated with these lines. BPA will mitigate any additional scope at the interconnection between the BPA rebuild project and the SCL reconductor project.

MOA Section 7

Section 7, Payment Schedule, of the MOA states that cost share payments under the MOA will be made at the completion of individual projects, but also provides that the parties will subsequently agree to the actual method and schedule for these payments. The parties now recognize that waiting until the completion of a project before exchanging funds is not the preferred course of action, given the potential for multiple year delays for completion of a project. According, the parties agree to the following alternative billing provisions:

1. Each party's cost obligation for performance of the duties associated with construction of each Preferred Plan Project shall be as specified in Sections 4 and 5 of the MOA. The cost of performing such duties shall be the actual cost of doing the work including overheads.

2. SCL Preferred Plan Projects

   Upon completion of the SCL projects, SCL shall submit final invoices to BPA and Puget associated with construction of the SCL Preferred Plan Projects. BPA and PSE shall remit payment to SCL within 30 days following receipt of the invoices.

   (a) SCL shall notify BPA and Puget as soon as practicable, at any time during the course of the project, SCL project estimates are exceeding the estimates described in Section 4 (b) of the MOA.

   (b) Pursuant to Section 5. SCL will provide supporting documentation showing estimate details.

   (c) Updated Projected Completion for all SCL Preferred Plan Projects is 2017, applicable to section 3 of the MOA.

3. Puget Preferred Plan Projects

   (a) Upon completion of the Puget Projects, Puget shall submit an invoice or payment to SCL for the SCL cost obligations associated with construction of the Puget Preferred Plan Projects.

   (b) Updated Projected Completion for all PSE Preferred Plan Projects is (2018?), applicable to section 3 of the MOA.

4. Billing Addresses

   Bonneville Power Administration
   ATTN:
   Transmission Account Executive
   for City of Seattle, City Light Department
   TSE TPP-2
   P.O. Box 61409
   Vancouver, WA 98666-1409

Puget Sound Energy, Inc.
ATTN:
Address
City/State/Zip

The City of Seattle, City Light Department
ATTN:
Address
City/State/Zip

MOA Section 8

Concerning the description of National Environmental Policy Act (NEPA) considerations in Section 8 of the MOA, the parties acknowledge that BPA, as a Federal agency, has certain obligations and responsibilities under NEPA and other federal laws (collectively the NEPA review process) that it must fulfill before it can make a final decision concerning whether to participate in implementation of certain of the Preferred Plan Projects described in Section 3 of the MOA and the capital cost allocation described in Sections 4 and 5 of the MOA. The parties agree that nothing in the MOA shall be construed as obligating or committing BPA to make a final decision concerning any of the Preferred Plan Projects and capital cost allocation before completing the NEPA review process. In addition, BPA reserves the right to determine the appropriate NEPA and other environmental compliance strategies for its actions under the MOA, and to choose any alternatives considered in the NEPA process, including the no-action alternative.

Furthermore, the parties acknowledge and agree that while the MOA identifies a number of Preferred Plan Projects to be undertaken by the parties, each of these projects could proceed independently from the others and that no single project is contingent or dependent upon another in the goal of relieving transmission congestion in the Puget Sound Area.

Please sign all originals of this Letter Agreement, return the remaining originals to my attention at one of the following addresses at your earliest convenience, but not later than Close of Business on (Month) XX, 2015. BPA will issue fully executed agreements to each party:

First Class Mail	Overnight Delivery Service
Bonneville Power Administration	Bonneville Power Administration
Mail Stop: TSE/TPP-2	Mail Stop: TSE/TPP-2
P.O. Box 61409	7500 NE 41st Street – Suite 130
Vancouver, WA 98666-1409	Vancouver, WA 98662

BPA will ensure that Puget and SCL have a full set of original signature pages.

If you have any questions, please call me at (360) 619-6015.

Sincerely,

Toni L. Timberman
Senior Transmission Account Executive
Transmission Sales

CONCUR:

PUGET SOUND ENERGY, INC.

By: _____

Name: _____
(Print/Type)

Title: _____

Date: _____

THE CITY OF SEATTLE,
CITY LIGHT DEPARTMENT

By: _____

Name: _____
(Print/Type)

Title: _____

Date: _____

Department of Energy

Bonneville Power Administration
P.O. Box 61409
Vancouver, WA 98666-1409

TRANSMISSION SERVICES

~~January~~ February XX, 2015

In reply refer to: TSE/TPP-2

Contract No. 14TX-16060
Letter Agreement

Ms. Booga Gilbertson
Vice President Operations Services
Puget Sound Energy, Inc.
P.O. Box 90868
Bellevue, WA 98009-0868

Mr. Phillip West
Customer Service Energy Officer
The City of Seattle, City Light Department
700 Fifth Avenue, Suite 2822
Seattle, WA 98104-5031

Dear Ms. Gilbertson and Mr. West:

The Bonneville Power Administration (BPA), Puget Sound Energy, Inc., (PSE) and The ~~-~~City of Seattle, City Light Department (SCL) are parties to the Memorandum of Agreement (MOA), Contract No. 11TX-15450, relating to the Preferred Puget Sound Area Plan of Service Projects and Cost Allocation. The parties to the MOA are currently in the initial stages of implementing their respective obligations under the MOA. As this has progressed, certain aspects of the MOA were identified that the parties believe need to be clarified.

This Letter Agreement describes these MOA clarifications to which the parties have agreed. As a convenience to the parties, the following clarifications to the MOA are organized by the section of the MOA in which they are located.

MOA Section 3

Concerning the Covington 500 kV Transformer Addition Project identified in Section 3(a) of the MOA, the parties agree that the transformer that would have been added at the Covington Substation will instead be added at the Raver Substation. There is no change in financial responsibility under the MOA due to this relocation.

Concerning the Puget Preferred Plan Projects identified in Section 3(b) of the MOA, the parties agree that the BPA funding originally intended for these projects will instead be directed under separate agreement to Puget's Whatcom County Transformer project. Accordingly, the parties acknowledge that BPA is not involved in any manner or capacity in PSE's Sammamish to Lakeside to Talbot Rebuild Project or its Lakeside 230 kV Transformer Addition Project.

~~Concerning the Puget Preferred Plan Projects identified in Section 3(b) of the MOA, the parties agree that the SCL funding originally intended for these projects will be directed to the Lakeside 230 kV Transformer Addition Project. Accordingly, the parties acknowledge that SCL is not involved in any manner or capacity in PSE's Sammamish to Lakeside to Talbot Rebuild Project.~~

Comment [TLT1]: Deleted per Phil West

Concerning the Bothell to SnoKing Reconductor Project identified in Section 3(c) of the MOA, this project was identified in the MOA as an SCL project. However, during subsequent discussions it was discovered that BPA owns the first ½ mile of these lines on the SnoKing end. The parties therefore agree that BPA will rebuild its owned portion of these lines at its cost, including any necessary replacement of equipment within SnoKing Substation associated with these lines. BPA ~~work~~ will mitigate any additional scope at the interconnection between the BPA rebuild project and the SCL reconductor project.

Formatted: Not Highlight

MOA Section 7

Section 7, Payment Schedule, of the MOA states that cost share payments under the MOA will be made at the completion of individual projects, but also provides that the parties will subsequently agree to the actual method and schedule for these payments. The parties now recognize that waiting until the completion of a project before exchanging funds is not the preferred course of action, given the potential for multiple year delays for completion of a project. According, the parties agree to the following alternative billing provisions:

1. Each party's cost obligation for performance of the duties associated with construction of each Preferred Plan Project shall be as specified in Sections 4 and 5 of the MOA. The cost of performing such duties shall be the actual cost of doing the work including overheads.

2. SCL Preferred Plan Projects

   Upon completion of the SCL projects, SCL shall submit final invoices to BPA and Puget associated with construction of the SCL Preferred Plan Projects. BPA and PSE shall remit payment to SCL within 30 days following receipt of the invoices.

   (a) SCL shall notify BPA and Puget as soon as practicable, at any time during the course of the project, SCL project estimates are exceeding the estimates described in Section 4 (b) of the MOA~~.~~

   (b) Pursuant to Section 5. SCL will provide supporting documentation showing estimate details.

   ~~(a)~~(c) Updated Projected C~~c~~ompletion for all SCL Preferred Plan Projects is 2017, applicable to section 3 of the MOA.

3. Puget Preferred Plan Projects

   (a) Upon completion of the Puget Projects, Puget shall submit an invoice or payment to SCL for the SCL cost obligations associated with construction of the Puget Preferred Plan Projects.

   ~~(a)~~(b) Updated Projected Completion for all PSE Preferred Plan Projects is (2018?), applicable to section 3 of the MOA.

4. Billing Addresses

   Bonneville Power Administration

ATTN:
Transmission Account Executive
for City of Seattle, City Light Department
TSE TPP-2
P.O. Box 61409
Vancouver, WA 98666-1409

Puget Sound Energy, Inc.
ATTN:
Address
City/State/Zip

The City of Seattle, City Light Department
ATTN:
Address
City/State/Zip

MOA Section 8

Concerning the description of National Environmental Policy Act (NEPA) considerations in Section 8 of the MOA, the parties acknowledge that BPA, as a Federal agency, has certain obligations and responsibilities under NEPA and other federal laws (collectively the NEPA review process) that it must fulfill before it can make a final decision concerning whether to participate in implementation of certain of the Preferred Plan Projects described in Section 3 of the MOA and the capital cost allocation described in Sections 4 and 5 of the MOA. The parties agree that nothing in the MOA shall be construed as obligating or committing BPA to make a final decision concerning any of the Preferred Plan Projects and capital cost allocation before completing the NEPA review process. In addition, BPA reserves the right to determine the appropriate NEPA and other environmental compliance strategies for its actions under the MOA, and to choose any alternatives considered in the NEPA process, including the no-action alternative.

Furthermore, the parties acknowledge and agree that while the MOA identifies a number of Preferred Plan Projects to be undertaken by the parties, each of these projects could proceed independently from the others and that no single project is contingent or dependent upon another in the goal of relieving transmission congestion in the Puget Sound Area.

Please sign all originals of this Letter Agreement, return the remaining originals to my attention at one of the following addresses at your earliest convenience, but not later than Close of Business on (~~January~~ Month), XX, 2015. BPA will issue fully executed agreements to each party:

First Class Mail	Overnight Delivery Service
Bonneville Power Administration	Bonneville Power Administration
Mail Stop: TSE/TPP-2	Mail Stop: TSE/TPP-2
P.O. Box 61409	7500 NE 41st Street – Suite 130
Vancouver, WA 98666-1409	Vancouver, WA 98662

BPA will ensure that Puget and SCL have a full set of original signature pages.

Formatted: Font color: Auto, Not Highlight
Formatted: Font color: Auto
Formatted: Highlight
Formatted: Highlight
Formatted: Highlight

If you have any questions, please call me at (360) 619-6015.

Sincerely,

Toni L. Timberman
Senior Transmission Account Executive
Transmission Sales

CONCUR:

PUGET SOUND ENERGY, INC.

By: _____

Name: _____
(Print/Type)

Title: _____

Date: _____

THE CITY OF SEATTLE,
CITY LIGHT DEPARTMENT

By: _____

Name: _____
(Print/Type)

Title: _____

Date: _____

From:	Timberman,Toni L (BPA) - TSE-TPP-2
To:	"Uzma Siddiqi (uzma.siddiqi@seattle.gov)"; "John Phillips"
Subject:	FW: final draft PSANI MOA Letter Agreement
Date:	Thursday, February 12, 2015 4:12:00 PM
Attachments:	16060 PSANI MOA LTR AGMT Feb 12 2015 TT CLEAN.doc 16060 PSANI MOA LTR AGMT Feb 12 2015 TT.doc

---

I see from Hardev's calendar that he is meeting with Phil and Booga at 1:00 on Feb 19th at SCL offices. We will not be ready to have them sign that quickly, but soon after…

From: Timberman,Toni L (BPA) - TSE-TPP-2
Sent: Thursday, February 12, 2015 3:46 PM
To: 'Uzma Siddiqi (uzma.siddiqi@seattle.gov)'; 'John Phillips'
Subject: final draft PSANI MOA Letter Agreement

Hi Uzma and John,

Attached are a redline and clean version of the final draft of the PSANI MOA Letter Agreement.

Please take a look and let me know if you have any comments.

Additionally, please fill in the billing address for your company.

Note that we might need to change the contract number from 14 TX___ to 15 TX

And, I am still debating whether I should sign this or Hardev. It seems odd to have me signing along with Booga and Phil when Hardev signed the original.

I will try to find out when their next meeting is and maybe we can send the copies for signature and they can all sign during the meeting.

Toni L. Timberman
Senior Transmission Account Executive | TSE TPP-2
BONNEVILLE POWER ADMINISTRATION
Vancouver, Washington
tltimberman@bpa.gov | P 360-619-6015 | (b) (6)

Department of Energy

Bonneville Power Administration
P.O. Box 61409
Vancouver, WA 98666-1409

TRANSMISSION SERVICES

February XX, 2015

In reply refer to: TSE/TPP-2

Contract No. 14TX-16060
Letter Agreement

Ms. Booga Gilbertson
Vice President Operations Services
Puget Sound Energy, Inc.
P.O. Box 90868
Bellevue, WA 98009-0868

Mr. Phillip West
Customer Service Energy Officer
The City of Seattle, City Light Department
700 Fifth Avenue, Suite 2822
Seattle, WA 98104-5031

Dear Ms. Gilbertson and Mr. West:

The Bonneville Power Administration (BPA), Puget Sound Energy, Inc., (PSE) and The City of Seattle, City Light Department (SCL) are parties to the Memorandum of Agreement (MOA), Contract No. 11TX-15450, relating to the Preferred Puget Sound Area Plan of Service Projects and Cost Allocation. The parties to the MOA are currently in the initial stages of implementing their respective obligations under the MOA. As this has progressed, certain aspects of the MOA were identified that the parties believe need to be clarified.

This Letter Agreement describes these MOA clarifications to which the parties have agreed. As a convenience to the parties, the following clarifications to the MOA are organized by the section of the MOA in which they are located.

MOA Section 3

Concerning the Covington 500 kV Transformer Addition Project identified in Section 3(a) of the MOA, the parties agree that the transformer that would have been added at the Covington Substation will instead be added at the Raver Substation. There is no change in financial responsibility under the MOA due to this relocation.

Concerning the Puget Preferred Plan Projects identified in Section 3(b) of the MOA, the parties agree that the BPA funding originally intended for these projects will instead be directed under separate agreement to Puget's Whatcom County Transformer project. Accordingly, the parties acknowledge that BPA is not involved in any manner or capacity in PSE's Sammamish to Lakeside to Talbot Rebuild Project or its Lakeside 230 kV Transformer Addition Project.

Concerning the Bothell to SnoKing Reconductor Project identified in Section 3(c) of the MOA, this project was identified in the MOA as an SCL project. However, during subsequent discussions it was discovered that BPA owns the first ½ mile of these lines on the SnoKing end. The parties therefore agree that BPA will rebuild its owned portion of these lines at its cost, including any necessary replacement of

equipment within SnoKing Substation associated with these lines. BPA will mitigate any additional scope at the interconnection between the BPA rebuild project and the SCL reconductor project.

MOA Section 7

Section 7, Payment Schedule, of the MOA states that cost share payments under the MOA will be made at the completion of individual projects, but also provides that the parties will subsequently agree to the actual method and schedule for these payments. The parties now recognize that waiting until the completion of a project before exchanging funds is not the preferred course of action, given the potential for multiple year delays for completion of a project. According, the parties agree to the following alternative billing provisions:

1. Each party's cost obligation for performance of the duties associated with construction of each Preferred Plan Project shall be as specified in Sections 4 and 5 of the MOA. The cost of performing such duties shall be the actual cost of doing the work including overheads.

2. SCL Preferred Plan Projects

   Upon completion of the SCL projects, SCL shall submit final invoices to BPA and Puget associated with construction of the SCL Preferred Plan Projects. BPA and PSE shall remit payment to SCL within 30 days following receipt of the invoices.

   (a) SCL shall notify BPA and Puget as soon as practicable, at any time during the course of the project, SCL project estimates are exceeding the estimates described in Section 4 (b) of the MOA.

   (b) Pursuant to Section 5. SCL will provide supporting documentation showing estimate details.

   (c) Updated Projected Completion for all SCL Preferred Plan Projects is 2017, applicable to section 3 of the MOA.

3. Puget Preferred Plan Projects

   (a) Upon completion of the Puget Projects, Puget shall submit an invoice or payment to SCL for the SCL cost obligations associated with construction of the Puget Preferred Plan Projects.

   (b) Updated Projected Completion for all PSE Preferred Plan Projects is (2018?), applicable to section 3 of the MOA.

4. Billing Addresses

   Bonneville Power Administration
   ATTN:
   Transmission Account Executive
   for City of Seattle, City Light Department
   TSE TPP-2
   P.O. Box 61409
   Vancouver, WA 98666-1409

Puget Sound Energy, Inc.
ATTN:
Address
City/State/Zip

The City of Seattle, City Light Department
ATTN:
Address
City/State/Zip

MOA Section 8

Concerning the description of National Environmental Policy Act (NEPA) considerations in Section 8 of the MOA, the parties acknowledge that BPA, as a Federal agency, has certain obligations and responsibilities under NEPA and other federal laws (collectively the NEPA review process) that it must fulfill before it can make a final decision concerning whether to participate in implementation of certain of the Preferred Plan Projects described in Section 3 of the MOA and the capital cost allocation described in Sections 4 and 5 of the MOA. The parties agree that nothing in the MOA shall be construed as obligating or committing BPA to make a final decision concerning any of the Preferred Plan Projects and capital cost allocation before completing the NEPA review process. In addition, BPA reserves the right to determine the appropriate NEPA and other environmental compliance strategies for its actions under the MOA, and to choose any alternatives considered in the NEPA process, including the no-action alternative.

Furthermore, the parties acknowledge and agree that while the MOA identifies a number of Preferred Plan Projects to be undertaken by the parties, each of these projects could proceed independently from the others and that no single project is contingent or dependent upon another in the goal of relieving transmission congestion in the Puget Sound Area.

Please sign all originals of this Letter Agreement, return the remaining originals to my attention at one of the following addresses at your earliest convenience, but not later than Close of Business on (Month) XX, 2015. BPA will issue fully executed agreements to each party:

First Class Mail	Overnight Delivery Service
Bonneville Power Administration	Bonneville Power Administration
Mail Stop: TSE/TPP-2	Mail Stop: TSE/TPP-2
P.O. Box 61409	7500 NE 41st Street – Suite 130
Vancouver, WA 98666-1409	Vancouver, WA 98662

BPA will ensure that Puget and SCL have a full set of original signature pages.

If you have any questions, please call me at (360) 619-6015.

Sincerely,

Toni L. Timberman
Senior Transmission Account Executive
Transmission Sales

CONCUR:

PUGET SOUND ENERGY, INC.

By: _____

Name: _____
(Print/Type)

Title: _____

Date: _____

THE CITY OF SEATTLE,
CITY LIGHT DEPARTMENT

By: _____

Name: _____
(Print/Type)

Title: _____

Date: _____

Department of Energy

Bonneville Power Administration
P.O. Box 61409
Vancouver, WA 98666-1409

TRANSMISSION SERVICES

~~January~~ February XX, 2015

In reply refer to: TSE/TPP-2

Contract No. 14TX-16060
Letter Agreement

Ms. Booga Gilbertson
Vice President Operations Services
Puget Sound Energy, Inc.
P.O. Box 90868
Bellevue, WA 98009-0868

Mr. Phillip West
Customer Service Energy Officer
The City of Seattle, City Light Department
700 Fifth Avenue, Suite 2822
Seattle, WA 98104-5031

Dear Ms. Gilbertson and Mr. West:

The Bonneville Power Administration (BPA), Puget Sound Energy, Inc., (PSE) and The ~~-~~City of Seattle, City Light Department (SCL) are parties to the Memorandum of Agreement (MOA), Contract No. 11TX-15450, relating to the Preferred Puget Sound Area Plan of Service Projects and Cost Allocation. The parties to the MOA are currently in the initial stages of implementing their respective obligations under the MOA. As this has progressed, certain aspects of the MOA were identified that the parties believe need to be clarified.

This Letter Agreement describes these MOA clarifications to which the parties have agreed. As a convenience to the parties, the following clarifications to the MOA are organized by the section of the MOA in which they are located.

MOA Section 3

Concerning the Covington 500 kV Transformer Addition Project identified in Section 3(a) of the MOA, the parties agree that the transformer that would have been added at the Covington Substation will instead be added at the Raver Substation. There is no change in financial responsibility under the MOA due to this relocation.

Concerning the Puget Preferred Plan Projects identified in Section 3(b) of the MOA, the parties agree that the BPA funding originally intended for these projects will instead be directed under separate agreement to Puget's Whatcom County Transformer project. Accordingly, the parties acknowledge that BPA is not involved in any manner or capacity in PSE's Sammamish to Lakeside to Talbot Rebuild Project or its Lakeside 230 kV Transformer Addition Project.

~~Concerning the Puget Preferred Plan Projects identified in Section 3(b) of the MOA, the parties agree that the SCL funding originally intended for these projects will be directed to the Lakeside 230 kV Transformer Addition Project. Accordingly, the parties acknowledge that SCL is not involved in any manner or capacity in PSE's Sammamish to Lakeside to Talbot Rebuild Project.~~

Comment [TLT1]: Deleted per Phil West

Concerning the Bothell to SnoKing Reconductor Project identified in Section 3(c) of the MOA, this project was identified in the MOA as an SCL project. However, during subsequent discussions it was discovered that BPA owns the first ½ mile of these lines on the SnoKing end. The parties therefore agree that BPA will rebuild its owned portion of these lines at its cost, including any necessary replacement of equipment within SnoKing Substation associated with these lines. BPA ~~work~~ will mitigate any additional scope at the interconnection between the BPA rebuild project and the SCL reconductor project.

Formatted: Not Highlight

MOA Section 7

Section 7, Payment Schedule, of the MOA states that cost share payments under the MOA will be made at the completion of individual projects, but also provides that the parties will subsequently agree to the actual method and schedule for these payments. The parties now recognize that waiting until the completion of a project before exchanging funds is not the preferred course of action, given the potential for multiple year delays for completion of a project. According, the parties agree to the following alternative billing provisions:

1. Each party's cost obligation for performance of the duties associated with construction of each Preferred Plan Project shall be as specified in Sections 4 and 5 of the MOA. The cost of performing such duties shall be the actual cost of doing the work including overheads.

2. SCL Preferred Plan Projects

   Upon completion of the SCL projects, SCL shall submit final invoices to BPA and Puget associated with construction of the SCL Preferred Plan Projects. BPA and PSE shall remit payment to SCL within 30 days following receipt of the invoices.

   (a) SCL shall notify BPA and Puget as soon as practicable, at any time during the course of the project, SCL project estimates are exceeding the estimates described in Section 4 (b) of the MOA~~.~~

   (b) Pursuant to Section 5. SCL will provide supporting documentation showing estimate details.

   ~~(a)~~(c) Updated Projected C~~c~~ompletion for all SCL Preferred Plan Projects is 2017, applicable to section 3 of the MOA.

3. Puget Preferred Plan Projects

   (a) Upon completion of the Puget Projects, Puget shall submit an invoice or payment to SCL for the SCL cost obligations associated with construction of the Puget Preferred Plan Projects.

   ~~(a)~~(b) Updated Projected Completion for all PSE Preferred Plan Projects is (2018?), applicable to section 3 of the MOA.

4. Billing Addresses

   Bonneville Power Administration

ATTN:
Transmission Account Executive
for City of Seattle, City Light Department
TSE TPP-2
P.O. Box 61409
Vancouver, WA 98666-1409

Puget Sound Energy, Inc.
ATTN:
Address
City/State/Zip

The City of Seattle, City Light Department
ATTN:
Address
City/State/Zip

MOA Section 8

Concerning the description of National Environmental Policy Act (NEPA) considerations in Section 8 of the MOA, the parties acknowledge that BPA, as a Federal agency, has certain obligations and responsibilities under NEPA and other federal laws (collectively the NEPA review process) that it must fulfill before it can make a final decision concerning whether to participate in implementation of certain of the Preferred Plan Projects described in Section 3 of the MOA and the capital cost allocation described in Sections 4 and 5 of the MOA. The parties agree that nothing in the MOA shall be construed as obligating or committing BPA to make a final decision concerning any of the Preferred Plan Projects and capital cost allocation before completing the NEPA review process. In addition, BPA reserves the right to determine the appropriate NEPA and other environmental compliance strategies for its actions under the MOA, and to choose any alternatives considered in the NEPA process, including the no-action alternative.

Furthermore, the parties acknowledge and agree that while the MOA identifies a number of Preferred Plan Projects to be undertaken by the parties, each of these projects could proceed independently from the others and that no single project is contingent or dependent upon another in the goal of relieving transmission congestion in the Puget Sound Area.

Please sign all originals of this Letter Agreement, return the remaining originals to my attention at one of the following addresses at your earliest convenience, but not later than Close of Business on (~~January~~ Month), XX, 2015. BPA will issue fully executed agreements to each party:

First Class Mail	Overnight Delivery Service
Bonneville Power Administration	Bonneville Power Administration
Mail Stop: TSE/TPP-2	Mail Stop: TSE/TPP-2
P.O. Box 61409	7500 NE 41st Street – Suite 130
Vancouver, WA 98666-1409	Vancouver, WA 98662

BPA will ensure that Puget and SCL have a full set of original signature pages.

Formatted: Font color: Auto, Not Highlight
Formatted: Font color: Auto
Formatted: Highlight
Formatted: Highlight
Formatted: Highlight

If you have any questions, please call me at (360) 619-6015.

Sincerely,

Toni L. Timberman
Senior Transmission Account Executive
Transmission Sales

CONCUR:

PUGET SOUND ENERGY, INC.

By: _____

Name: _____
(Print/Type)

Title: _____

Date: _____

THE CITY OF SEATTLE,
CITY LIGHT DEPARTMENT

By: _____

Name: _____
(Print/Type)

Title: _____

Date: _____