Department of Energy

Bonneville Power Administration
P.O. Box 3621
Portland, Oregon 97208-3621

Freedom of Information Act Program

September 9, 2015

In reply refer to: FOIA #BPA-2015-01341-F

William Campbell
(b)(6)

Mr. Campbell:

This is a final response to your request for Bonneville Power Administration (BPA) records under the Freedom of Information Act (FOIA), 5 U.S.C. § 552. Your request was received in this office on Wednesday, May 20, 2015, with an acknowledgement letter sent to you on May 26, 2015.

In letters dated June 22, July 10, and August 7, 2015, BPA provided estimated targets dates for completing your request.

You requested:

"Copies of Revision A and Revision B of Appendix D, Underground Route Study, to the I-5 Corridor Reinforcement Project Draft Environmental Impact Statement. Appendix D was prepared by Power Engineers. Appendix D makes reference to these revisions on the page preceding the Table of Contents (Page i)."

We conducted a search for the requested records. BPA is releasing Revision A in full—to the extent that there is any material in it that may be deliberative under Exemption 5, BPA is making a discretionary release. BPA never received, nor used, Revision B from Power Engineers (internal contractor document), and therefore it is not an agency record subject to FOIA.

There are no fees associated with this request.

Appeal:

You may still seek administrative appeal pursuant to Department of Energy FOIA regulations at 10 C.F.R. § 1004.8 if you feel the search was not adequate. If you choose to appeal, you must do so in writing within 30 days, and include the following information:

(1) The nature of your appeal - denial of records, partial denial of records, adequacy of search, or denial of fee waiver;
(2) Any legal authorities relied upon to support the appeal; and
(3) A copy of this determination letter.

Clearly mark both your letter and envelope with the words "FOIA Appeal," and direct it to the following address:

Director, Office of Hearings and Appeals
Department of Energy
1000 Independence Avenue SW
Washington DC 20585-1615

I appreciate the opportunity to assist you. If you have any questions, please contact Kim Winn, Case Coordinator, at kswinn@bpa.gov.

Sincerely,

C. M. Frost
Freedom of Information/Privacy Act Officer

Enclosure: Responsive documents

July 6, 2010

BONNEVILLE POWER ADMINISTRATION

I-5 Transmission Corridor Project

Underground Route Study

PROJECT NUMBER:
119864

PROJECT CONTACT:
DENNIS JOHNSON
EMAIL:
DEJOHNSON@POWERENG.COM
PHONE:
(913) 338-0599

POWER ENGINEERS

UNDERGROUND ROUTE STUDY

PREPARED FOR: BONNEVILLE POWER ADMINISTRATION

PREPARED BY: DENNIS JOHNSON
(208) 788-0417
DEJOHNSON@POWERENG.COM

REVISION HISTORY		
DATE	REVISED BY	REVISION
07/06/10	Dennis Johnson	A

TABLE OF CONTENTS

1.0 EXECUTIVE SUMMARY 1

1.1 SCOPE OF WORK 1
1.2 COST ESTIMATES 1

2.0 UNDERGROUND CABLE SYSTEMS 3

2.1 EXPERIENCE 3
2.2 CABLE SYSTEM RATING 4
2.3 EMF 5
2.4 CONSTRUCTION METHODS 6
2.4.1 Open Trench 6
2.4.2 Trenchless Installation 7
2.4.3 Manholes 8
2.4.4 Cable Installation and Testing 9
2.5 LAND USE 10
2.6 ELECTRICAL CONSIDERATIONS 12
2.6.1 Reactive Compensation 12
2.7 TRANSITION STATIONS/SUBSTATIONS 13
2.8 MAINTENANCE 15
2.8.1 Cable System Maintenance 15
2.9 CABLE FAILURE LOCATING AND REPAIR 16
2.9.1 Fault Locating 16
2.9.2 Cable Repair 17

3.0 CONCEPTUAL DESIGN 18

3.1 CABLE SYSTEM DESIGN 19
3.1.1 Open Cut Trench Design 20
3.2 ELECTRICAL CHARACTERISTICS 21
3.3 MAGNETIC FIELD CALCULATIONS 22

4.0 COST ESTIMATES 24

4.1 INTRODUCTION 24
4.2 COST ESTIMATE ASSUMPTIONS 24
4.3 SUMMARY OF COST ESTIMATES 25
4.3.1 East Route 25
4.3.2 West Route 25
4.3.3 Unit Costs 26

APPENDIX A

APPENDIX B

1.0 EXECUTIVE SUMMARY

1.0 EXECUTIVE SUMMARY

1.1 Scope of Work

Bonneville Power Administration (BPA) is proposing to install a new single circuit 500kV transmission line from a new proposed substation near Castle Rock, Washington extending approximately 70 miles south to a new proposed substation near Troutdale, Oregon. The line is being developed to proactively counter the growing demand within BPA's existing electrical transmission system in southwest Washington and northwest Oregon. To ease congestion and keep pace with these growing demands, an in depth analysis at implementing a new transmission line through the proposed project area has been under taken to comply with the provisions of the National Environmental Policy Act (NEPA). The NEPA process is intended to promote better agency decisions by ensuring that high quality environmental information is available to agency officials and the public before the agency decides whether and how to undertake a federal action. As part of the NEPA scoping process, BPA has enlisted POWER Engineers, Inc. (POWER) to investigate the availability and feasibility of placing all or portions of the proposed transmission line underground. This report provides an overview of available underground transmission technologies, applications, and capabilities; as well as construction, operation, maintenance, repair, and estimated costs for a 500kV underground transmission line.

BPA identified the study area and various possible overhead line routes. Each potential route was divided into a number of smaller segments. A map showing the study area and route segments is included in Appendix A. BPA narrowed the project area to two preliminary underground routes. These routes are constructed of a number of different route segments. The studied routes and associated route segments are:

- Eastern Route – Segments 3, 7, 11, 21, 29, 34, 35, 49, 51, 52
- Western Route – Segments 2, 4, 9, 25, 36, 41, 45, 50, 52

Furthermore, to minimize the overall scope of design work, this study focuses solely on high voltage extruded dielectric cable (HVED); namely cross-linked polyethylene (XLPE). While other cable technologies do exist, the current US trend is to utilize XLPE cable for favorable traits in reliability, constructability, and long term operation and maintenance.

1.2 Cost Estimates

The estimated installed costs for the proposed transmission line for each route can be seen in Table 1-1. Furthermore, per unit costs on a per mile basis were developed for the different types of terrain, flat cross country, urban, hilly or mountainous, wetlands and other water bodies, which may be encountered in the area. To cross the wetlands and other water bodies, it was assumed a trenchless installation method, horizontal directional drilling (HDD), would be needed. Table 1-2 shows these per unit costs.

TABLE 1-1 COST ESTIMATES

Route/Installation	Material Costs	Labor Costs	Total Cost
Eastern Route	$1,027,167,774	$419,661,886	$1,446,829,660
Western Route	$1,034,061,217	$426,271,912	$1,460,333,129

TABLE 1-2 PER UNIT COSTS			
Route/Installation	**Material Costs**	**Labor Costs**	**Total Cost**
Flat Cross Country Installation	$14,529,560	$5,447,953	$19,977,513
Hilly/Mountainous Installation	$14,466,310	$7,258,225	$21,724,535
Urban Installation	$14,853,745	$5,230,258	$20,084,003
HDD Installation	$10,370,240	$7,208,143	$17,578,383
Transition Station	$2,272,314	$1,044,632	$3,316,946

2.0 UNDERGROUND CABLE SYSTEMS

2.0 UNDERGROUND CABLE SYSTEMS

Today, primarily two types of underground cable systems are being installed at the 500kV voltage level worldwide. They are:

- High Voltage Extruded Dielectric (HVED) cable system
- Self Contained Fluid-Filled (SCFF) cable system.

While a majority of the EHV underground cable installations worldwide are SCFF, a significant amount of HVED cable has recently been installed. As the cable manufacturing process has evolved and utilizing cross-linked polyethylene (XLPE) as the primary insulation material, HVED cable systems have largely become the preferred underground cable system for EHV cable installations. With the emergence of the XLPE cable technology at higher voltages, installations of SCFF cable systems have fallen significantly. Also, XLPE cable systems eliminate the need for continuous monitoring of the fluid pressure and environmental concerns regarding possible leakage of the dielectric fluid associated with SCFF cable systems.

While other EHV technologies, Gas Insulated Transmission Line (GITL) and High Temperature Superconducting (HTS), exists, GITL is not recommended for long distance applications and HTS cable has not been developed for use at 500kV and long length applications.

At the request of BPA this report only addresses the use of an HVED cable system. Brief discussions of XLPE and SCFF cable systems are included in the Appendix.

2.1 Experience

There are a limited number of underground XLPE cable systems installed in the world at 500kV. However, there have been an increasing number of 400kV installations around the world. The highest voltage of XLPE cable installed in the US is 345kV.

The following is a list of underground cable installations for voltages 345kV and above.

TABLE 2-1 UNDERGROUND CABLE EXPERIENCE OVER 400KV

Country	Date	Voltage (kV)	Circuit Length (km)	Installation Type
Taiwan	2000	345	20.6	Tunnel
Korea	2003	345	19.6	Tunnel
USA	2006	345	13.9	Duct/manhole
USA	2007	345	3.8	Duct/manhole
USA	2008	345	13.0	Duct/manhole
Denmark	1997	380-400	21.3	Direct Buried
Germany	1998	380-400	12.6	Tunnel
Denmark	1999	380-400	12.0	Direct Buried
Germany	2000	380-400	10.4	Tunnel
Saudi Arabia	2000	380-400	11.2	Direct Buried
Iraq	2001	380-400	4.0	
Spain	2002	380-400	6.0	Tunnel
Abu Dhabi	2003	380-400	12.5	Direct Buried

TABLE 2-1 UNDERGROUND CABLE EXPERIENCE OVER 400KV

Country	Date	Voltage (kV)	Circuit Length (km)	Installation Type
Denmark	2004	380-400	27.0	Direct Buried/ducts
Italy	2006	380-400	16.8	Direct Buried
Spain	2004	380-400	25.6	Tunnel
UK	2005	380-400	20.6	Tunnel
UK	2005	380-400	5.4	Tunnel
Austria	2005	380-400	10.4	Direct Buried/Tunnel
Netherlands	2005	380-400	4.5	Direct Buried/ducts
Italy	2005	380-400	1.3	Direct Buried
UAE	2006	380-400	2.7	
Italy	2006	380-400	8.2	Direct Buried
UK	2007	380-400	13.3	Tunnel
Italy	2007	380-400	3.5	Direct Buried
Turkey	2007	380-400	13.2	Direct Buried
Netherlands	2007	380-400	1.5	Direct Buried/pipes
Netherlands	2008	380-400	7.8	Direct Buried
Qatar	2009	380-400	1.3	
Abu-Dhabi	2009	380-400	6.0	Direct Buried
Qatar	2009	380-400	16.4	Direct Buried
France	2009	380-400	5.0	Duct
Qatar	2010	380-400	22.0	Direct Buried
Qatar	2010	380-400	11.2	Direct Buried
Netherlands	2010	380-400	12.8	Direct Buried/pipes
Netherlands	2010	380-400	4.4	Duct
UK	2010	380-400	7.3	Direct Buried
UK	2010	380-400	11.0	Tunnel
UK	2010	380-400	1.8	Trough
Japan		500	80	Tunnel/Bridge
Russia		500	1.5	
China		500	34.3	Tunnel

2.2 Cable System Rating

The ampacity, or current rating, of a cable is one of the most important concepts to understand when designing an underground cable system, since its calculation encompasses many aspects of the cable construction and installation. There are many factors that come into play when trying to design the optimal and most economical underground cable systems. One of the main factors is the thermal performance of the underground cable system.

There are many design parameters that must be determined to achieve optimal thermal performance, thus achieving the load transfer requirements. These considerations are as follows:

- Cable Size – increasing the cable size generally allows for an increased load transfer. However, there is a limit to the maximum conductor size that can be manufactured by the majority of the cable manufacturers. This conductor size is typically accepted to be 3000-3500 kcmil for HPFF and up to 5000 kcmil for XLPE. The larger conductor sizes are typically manufactured at a significant increase in cost.

- Soil Thermal Resistivity – the ability of the heat to dissipate away from the cable is based on the thermal properties of the material installed around the cable.

- Cable Depth – the deeper the cable is from the surface the harder it is for the surrounding soil to dissipate the heat, thus resulting in a lower ampacity. Typically, HDD construction will require a larger cable.

- Cable Separation – other cables in close proximity also generate heat, thus resulting in mutual heating. This mutual heating could be reduced further by increasing the separation of the cables. However, the further the cables are separated the larger the excavation would need to be and an increase in cost would result.

2.3 EMF

Electric and magnetic field (EMF) is a term used to describe electrical and magnetic fields created by electric voltage (electric fields) and electric current (magnetic fields). Electric fields are present whenever voltage exists on an object and are not dependent on current. Similarly magnetic fields are present whenever current flows in a conductor and are not dependent on the presence of a voltage. When an object has voltage and carries current, it produces both an electric and magnetic field and this is referred to as EMF. For shielded underground cables, the electric field is entirely contained within the cable. While no electric field exists external to the cable, the term EMF is still used for underground cable, but only refers to the magnetic field.

The movement of electric charges along a conductive path is called electric current and is measured in amperes (“amps”) or (“A”). Current measures the “flow” of electricity, and the moving charges in an electric current produce a magnetic field that exerts force on other moving charges. Wires running in parallel and carrying currents in the same direction attract, while wires carrying currents in opposite directions repel. This is the principle by which electric motors generate force. Magnetic fields are measured in gauss (“G”) or tesla (“T”) (1 T = 10,000 G). Smaller fields are measured in milligauss (1 mG = 0.001 G) or microtesla (1 μT = one-millionth of a tesla). In the United States, the milligauss is the unit most often used to measure the strength of power frequency magnetic fields.

Due to symmetry, the magnetic fields are the highest directly over the underground lines. However, the strength of the magnetic fields fall-off very rapidly with lateral distance from the cable system. Furthermore, the phase arrangement of the cables can be positioned to help reduce EMF fields through a cancelation effect.

One method to further decrease the magnetic field is to install the duct bank deeper; however, this will result in higher installation costs and may impact the ampacity of the circuit resulting in a larger cable requirement. While installing the duct bank deeper does result in lower magnetic fields, it would not reduce the magnetic field at the transition structures.

2.4 Construction Methods

There are two ways that a HVED cable system is typically installed. These ways are direct buried or in concrete encased ducts. Even though direct buried is the most economical method for installing a HVED cable system, the most common method in the US is to install a duct bank system. The reason a duct bank is the most common installation method is as follows:

- Provides mechanical protection
- Eliminates any re-excavation in the event of a cable failure.
- Easier to repair
- Short length of trench can be opened for construction activities. A direct buried system requires that the entire trench be left open in order to be able to install the cable.

The most common construction method for constructing an underground duct bank is by open cut trenching. Trenchless methods such as horizontal directional drilling (HDD) and jack and bore are also common when open trenching is not allowed.

2.4.1 Open Trench

This consists of using excavation equipment to remove any concrete, asphalt road surface, topsoil and sub-grade material to the desired depth. The material removed is taken to an appropriate off-site location for disposal or used for fill as appropriate. Once a portion of the trench is dug, PVC conduit is assembled and lowered into the trench. The area around the conduit is filled with a high strength thermally corrective concrete (3000 psi). After the concrete is installed the trench is backfilled and the site restored. Backfill materials can be clean excavated material, thermal sand and/or a thermally corrective concrete mix. Figure 2-1 shows a typical trench excavation.

Figure 2-1 Typical trench excavation

2.4.2 Trenchless Installation

There are two types of trenchless methods that are commonly utilized when open trenching may not be allowed. They are: jack and bore and horizontal directional drilling (HDD). Common areas where open trenching may not be allowed are: crossing roadways, street intersections, railroad crossings, bodies of water, wetlands and other environmentally sensitive areas.

Jack and Bore

The jack and boring method is commonly used for short crossings, under 400 feet, and where no bends would be necessary. A jack and bore installation for a HVED consists of installing a casing under the obstruction and then installing the conduit inside the casing. Selection of the casing material is very important. Historically, most bores have been installed with steel casings, but there has been a trend to non-metallic casings such as HDPE, fiberglass or reinforced concrete pipe (RCP) due to the affect on ampacity.

To initiate a jack and bore installation, a bore pit having a minimum size of 40 ft long by 10 ft wide would be excavated. This bore pit is required by the boring equipment and for placing and welding 20-ft sections of casing pipe. Also, prior to starting the boring process, an exit pit approximately 10 ft in length should be excavated on the opposite side of the crossing. Since a bore is basically at a greater depth than an open trench, the entrance and exit pits require shoring (and possibly tight sheeting) in accordance with OSHA regulations. Secondly, if the boring is to be done in poorly consolidated soil (soil that begins to slough or flow if unsupported after a few minutes), solid sheeting would be required to enclose the entire entrance pit, allowing only an opening for inserting and installing the casing and auger. Once the boring machine is in place, the bore would begin and continue until the casing reaches the other side.

Casing sizes can vary for cable systems from 14 to 84 in, depending upon the type of cable system, number of circuits being installed, and length of the bore. The longer the bore, the more difficult it is to control the direction of the bore and to fill the casing after the pipe/duct installation.

Horizontal Directional Drilling (HDD)

The HDD method is commonly used for longer crossing and where bends may be needed. A HDD installation for a HVED cable system consists of installing a casing with conduits inside or just installing the conduits in a bundle by themselves.

The HDD method consists of a process, where a small diameter pilot hole is drilled from entry to exit, followed by a reamer that is pulled back to enlarge the pilot hole. Finally, the product pipe is pulled into the enlarged hole. HDD operations have become quite popular with utilities since it eliminates the need to excavate large bore pits and the work can be performed from the surface. While this method does not require any significant pit excavation, it does require a significant area at the entry point and exit points of the drill. A typical entry point site requires an area of about 100 ft by 150 ft and an exit area of 100 ft by 100 ft. Figure 2-2 shows a typical HDD set up.

Figure 2-2 Typical HDD Set-up

If a casing is installed, the duct would be installed using specially designed spacers. The pipe would then be filled with a thermally approved grout. Without a casing, the conduits would be bundled together using specially designed spacers and then pulled back into the hole as a complete package.

When crossing any body of water a number of concerns arise, and generally these concerns are area specific. The main issues involve the type of the body of water to be crossed, whether or not the area is environmentally sensitive, the location of any access points, environmental control, and permitting. When performing any work around bodies of water special permitting is usually required, as is an environmental impact study. In addition, extensive measures must be taken in preserving the natural water flow. This can range anywhere from erosion control to complete removal of all excavated soils. Because horizontal directional drilling uses bentonite, a clay type drilling fluid to stabilize the bore and reduce mechanical wear, concerns of frac-out into the water body arise. However, because bentonite is of a natural origin, fracing-out into the body of water generally is not a large concern.

2.4.3 Manholes

Manholes are needed periodically along an underground route to facilitate cable installation, for maintenance requirements and access for future repairs. Manholes are typically spaced every 1,500 to 2,500 feet along the route. The manhole size and layout is based on the type of cable system installed. The manhole size is determined on the space required for cable pulling, splicing and supporting the cable in the manhole. For a 500 kV XLPE cable, the typical outside dimensions for each manhole would be about 10 foot wide by 35 foot long and the spacing between manholes would be about 1300 to 1800 depending on the cable size. Many utilities require a separate manhole for each set of cables for safety reasons. These utilities do not allow entrance to the manhole with any cables being energized. So for the purpose of this report, POWER assumed a manhole would be installed for each set of three cables at each splice location. During detail design specially designed manholes could be investigated that would allow multiple circuits to be installed in a single manhole and reduce the overall footprint of the manholes at each splice location.

The factors contributing to the final placement of the manholes are: allowable pulling tensions, sidewall pressure on the cable as it goes around a bend and the maximum length of cable that can be transported on a reel, based on the reels width, height and weight.

Typically the manholes are pre-cast and delivered to the site on a tractor trailer. A crane is then used to set the manhole. Figure 2-3 shows the setting of a pre-cast manhole.

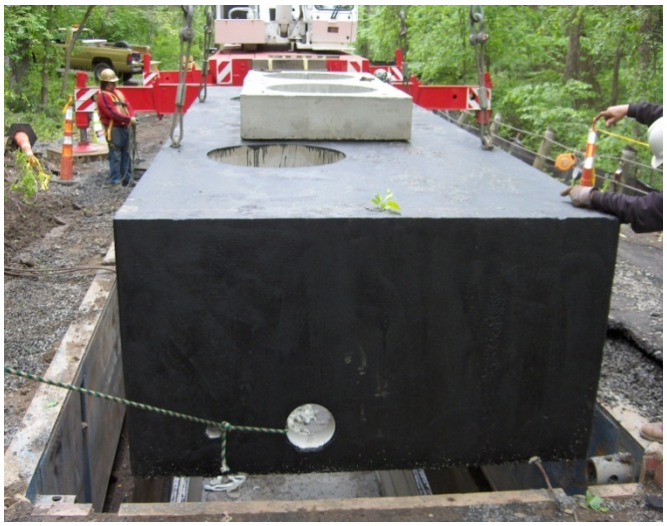

Figure 2-3 Typical Manhole Placement

2.4.4 Cable Installation and Testing

Following the installation of the duct bank and manholes, the cable would be installed. Prior to installation of the cable, the conduit would be tested and cleaned by pulling a mandrel and swap through each of the ducts. If the mandrel is pulled successfully, the conduit would be declared suitable for installation of the cable. Cable installation procedures and equipment would be based on environmental conditions, equipment and material placement and pulling requirements.

The typical cable pulling setup would be to set the reel of cable at the transition structure or at one of the manholes and place the winch truck at the opposite end. The cable should always be pulled from the transition structure to the nearest manhole. Direction of pull between manholes should be determined based on the direction that results in the lowest pulling or sidewall tensions. Once all the cable is pulled into a manhole from each direction, splicing of the cable could commence. This process would be followed until all the cable has been pulled, terminated or spliced. Once this has occurred the cable would be tested. Figure 2-4 shows a typical cable reel set up.

Figure 2-4 Typical Cable Pulling Set up

2.5 Land Use

When routing an underground line, it is important to know the type of area and terrain that the line will be crossing.

Urban

Urban areas are becoming more and more congested with traffic and underground utilities. This makes the installation of a new underground transmission lines difficult. When choosing routes in urban areas for new circuits, extreme care is required to locate the existing underground facilities. The typical location for a new underground circuit in an urban area is within the road right-of-way. There is usually very little undeveloped land available that could be used for installing an underground line. Major thoroughfares should be avoided because of the large amount of traffic that would have to be controlled. The designer should be aware that a significant cost of installing circuits in urban locations is traffic control.

Suburban

Suburban areas, like urban areas, are becoming congested with traffic and construction activities. Schools, churches, and homes will likely be included in the route selected through suburban areas, requiring additional safety considerations during construction. These areas should be avoided, if possible. During construction, the entire road may have to be closed to provide sufficient working space for the installation of the underground cable system.

Rural

Rural areas are generally easier locations in which to construct underground lines because they usually have fewer existing underground utilities; however, they also lend themselves to overhead transmission lines more easily than suburban and urban areas. Since rural areas are generally undeveloped, the type of terrain the underground line must traverse is an important design consideration. The different terrains a transmission route may encounter are: flat, rolling hills, mountains, and wetlands or other large water bodies/obstructions. A disadvantage to rural areas is the possible limited accessibility to the route corridor for construction and future maintenance.

The type of terrain and soil conditions can greatly impact the cost of installing an underground cable system.

- Flat terrain – this type of terrain is the easiest type of terrain to perform open cut trenching unless there are environmentally sensitive wetlands. If open trenching of the wetland is unacceptable, HDD is typically used to cross under the wetland. Typically, a construction road is constructed along the full length of the trenching operation in rural areas to provide the necessary construction access.
- Rolling hills – this type of a terrain is also well suited for open cut trenching as long as the slope of the hills are not extreme (<10%). Extreme slopes can make open cutting a big challenge. The main challenge is to be able get all the necessary construction equipment, concrete trucks, tractor trailers, cranes, and cable reels, up and down the slopes to the necessary locations. Suitable access roads for the construction equipment are needed to get up and down the hill. These access roads can be constructed by cutting into the hill or designing some type of switch back. The type of design is predicated on the extent of the slope. While HDD could be utilized to cross a series of hills to avoid the slope issue, the issue of gaining access to each drill location is still a primary concern and maybe impossible to achieve.
- Mountains – this type of terrain can be a challenge to the construction of an underground cable system. The same issues about the grade slope discussed above, applies to the mountain terrain as well. In addition, mountainous terrain, usually indicate the existence of rock. To excavate the rock, explosive may need to be used.
- Wetlands – while open cutting can be used to cross wetlands, typically, there are significant environmental controls applied to the process, which will generally significantly increase the costs. In some cases, HDD can be used to span a large wetland area.
- Large waterbodies/obstructions – there are some situations where open trenching is not practical. This situations involve crossing of large rivers, waterways, highways or railroad tracks where open cutting is not allowed.

The type of land use often determines the amount of easement or right-of-way available for the underground line. Underground lines are frequently located in existing roadway rights-of-way. Typically, no easement is required to install the underground line in public right-of-way; however, the owner of the road usually reserves the right to have the utility relocate the underground line if a future conflict occurs. For this reason, some utilities prefer to install underground circuits within a dedicated easement adjacent and parallel to the public right-of-way, and to accept the added cost. Additionally, underground lines can be installed in existing overhead line right-of-ways or in joint use easements when long cross-country inter-ties are being installed.

While typically only a 30 foot right-of-way is required for most projects, this project would require a larger amount of right-of-way depending on the installation method. Because it is assumed a large majority of each route will be located in rural communities, right-of-way width may be a non-issue. In an attempt to minimize conductor size, each duct bank will need at least 10 foot center-to-center separation resulting in a total right-of-way width of approximately 50 feet after access and constructability is considered. Further, temporary construction easements may be required if the underground installation could not be installed within or at the edge of road right-of-way and the road right-of-way is not suitable for the set up of the installation equipment. All trees in the permanent and temporary easements would need to be cleared for construction. All federal, state, county, city and other applicable agencies would need to be contacted to determine permitting requirements. The final decision on the amount required for right-of-way would be determined during final route selection.

2.6 Electrical Considerations

The characteristics of 500 kV underground cables are significantly different from those of 500 kV overhead lines, and these differences must be taken into account when considering integrating underground cables into a transmission system composed primarily of overhead lines. The following is a list of some of the important design considerations.

- Cable reactive-compensation requirements
- Effects on power flows
- Effects on switching devices
- Effects on surge-protective devices
- Steady-state voltage effects
- Impact on system parallel harmonic resonance frequency
- Short-term overload characteristics
- Losses

An in-depth analysis of these topics requires sophisticated load-flow, transient-stability, short-circuit, and overvoltage calculation computer programs. No attempt was made to perform any system analysis. Before an underground 500 kV cable is considered further, comprehensive system analysis should be performed to determine the impact of the underground cable system on BPA’s network.

2.6.1 Reactive Compensation

One significant design consideration with a 500 kV underground cable system is the amount of capacitance which would be added to BPA’s system and the resulting charging current. Most 500 kV transmission systems cannot accept the amount of capacitance that would be added to the system as a result of adding underground cables. As a result, reactive compensation must be added to the system to mitigate this additional capacitance. Shunt reactors are often placed at one or both ends of long cable circuits to limit the voltage rise during light-load conditions, especially where the local power system is relatively weak (high system impedances) at the cable location. The optimum amount and location of shunt compensation must be determined by running load-flow cases at different load levels and studying the effects of future system expansion. In systems having a significant amount of cables, system power factor can be influenced at light-load periods to the extent that the system could go leading if not corrected by reducing other capacitive VAR sources.

For the purpose of this report, it was assumed that reactive compensation would be added at each substation. The amount of compensation would be equivalent to the capacitance being added by the underground cables to the system. Capacitance calculations were performed to estimate the capacitance being added to the electric system for each design option, and the amount of reactive compensation to offset the capacitance. The results of these calculations are included in Section 3.

2.7 Transition Stations/Substations

Because of the potential need for reactive compensation and the number of cables per circuit, special attention would need to be given to the design of the overhead to underground transition facility at each end. For voltages under 230kV, the overhead to underground transition is commonly accommodated on a single shaft structure; however this is typically not the case for a 500kV line for the following reasons:

1. Typically, multiple cables per circuit are required and could not be accommodated on a single shaft structure.

2. The charging current for a 500 kV underground lines of any length is usually large (>3 amps) and could not be broken by lifting a jumper. This would mean a switch would need to be installed and many 500 kV disconnect switches cannot break over 2 amperes of capacitive current. This means that breakers or other special interrupting devices would be needed to allow the utility to isolate any set of cables while operating the remaining cables. With the capacitive charge, special consideration in the selection of the breakers and disconnect switches need to be made.

3. The need to apply reactive compensation to the system. While reactors could be installed at nearby substations, the best location is as close to the end of the cable as possible. The other benefit of placing the reactors near the cable is that the reactor will help in bleeding off the capacitive charge of the cable.

The design of a 500 kV transition station turns out to be similar to a small switching station. The layout and size of a transition site would be determined by the amount of equipment that would be needed, such as disconnect switches, shunt reactors, breakers, control house, pressurization plants, etc. For this application, the transition station would consist of a single overhead take-off tower typically an A-frame structure located at one end of the yard. Disconnect switches and circuit breakers are generally installed between the overhead line and underground cables. Figure 2-5 shows the minimum size layout for a transition station with three cables per phase with a shunt reactor for power factor correction.

Alternative the design below, a breaker and a half or ring bus scheme could be utilized. By changing the breaker scheme the system can still be operated, at a reduced capacity, if one set of cables needs to be taken out of service. This will also allow for maintenance of different station equipment, breakers, reactors, ect, without de-energizing the line.

Switches would be installed for each set of cables to allow for further isolation. It is important to note that the switches would only be operable when the charging current has been discharged from the cable. If reactors are located in the transition station, the reactor will allow the cable to discharge through the reactor more quickly. Depending on the amount of capacitance and system stability, shunt reactors would need to be installed at one or both ends of each underground circuit.

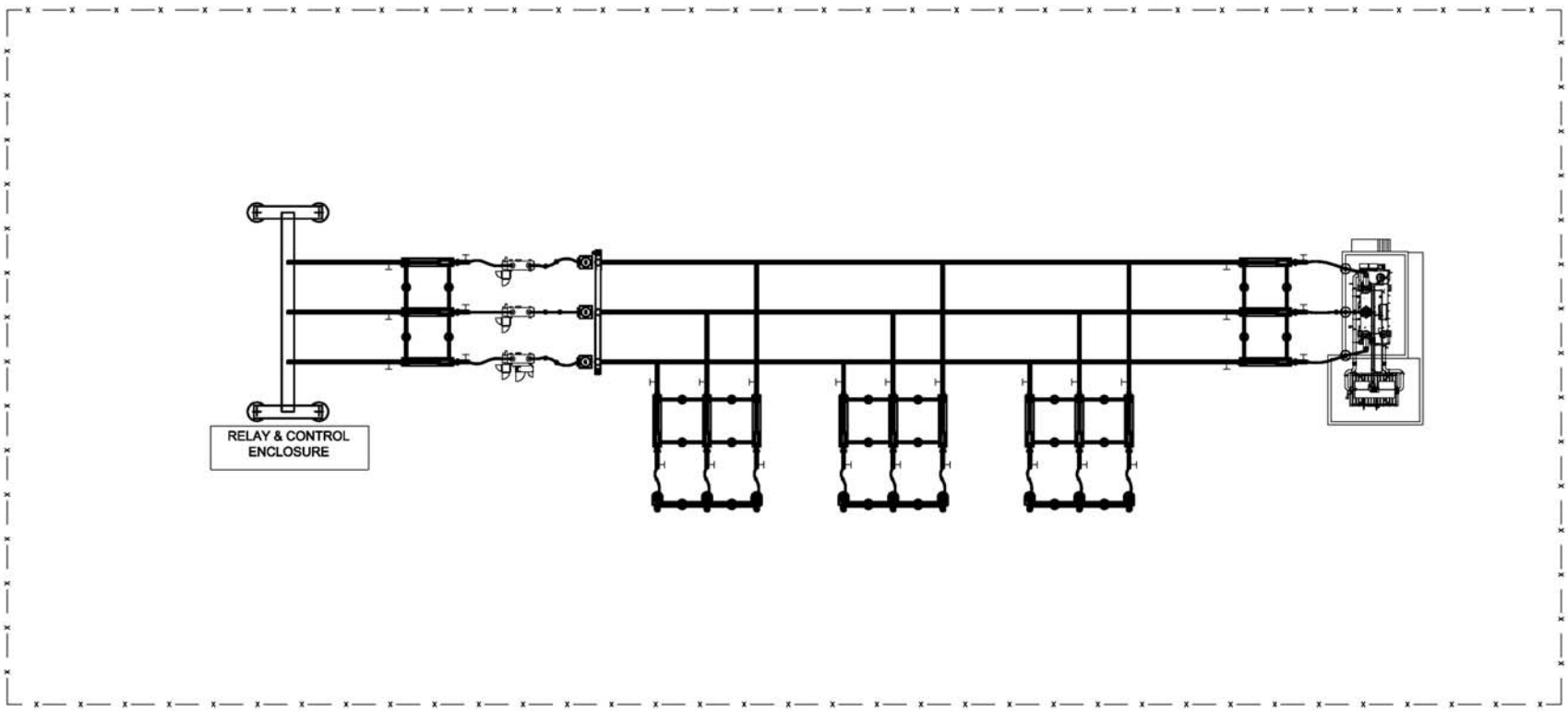

Figure 2-5 Typical Transition Station Layout

2.8 Maintenance

Routine maintenance on underground cables should be performed regularly to ensure the cables would operate with uninterrupted services.

Typical major components to be checked are as follows:

1. Terminators
2. Manholes
3. Lighting Arrestors
4. Grounds (Very Important)
5. Cables

The method of checking the condition and maintenance of the above items involve various methods of inspection, primarily visual and performed as follows:

Note: Some inspections should be performed only during an outage. Use extreme caution when working around energized lines. Work should be performed per standard utility practices.

2.8.1 Cable System Maintenance

Routine maintenance on XLPE cables should be performed regularly every six months to a year, and scheduled around an outage.

Terminators

Terminators should be inspected to determine if the insulator skirts are chipped or cracked, if so, they must be repaired or replaced. Chipped or cracked porcelain must be repaired in order to prevent ingress of moisture into the terminator.

Terminators should be checked for buildup of dirt and contaminant along the skirts, or at the ferrule. In severe cases of buildup they should be wiped clean to prevent flashovers.

Visual inspection should be made for any sign of oil leaks, cracked lead wipes, damaged grounds, sagging support brackets, overheating of connections, and damaged stand-off insulators. If any of the above is found they should be repaired.

These inspections should be performed every year.

Manholes

Manholes should be inspected to ensure cables are securely fastened to the brackets/clamps, and that ground connections are intact, and brackets are securely attached to the walls. It is recommended that the cable system operator pump, as practical and feasible, any water inside the manholes.

These inspections should be performed every six months.

Lightning Arrestors

Lightning arrestors should be checked for signs of tracking, and chipped or cracked skirts. Verify that ground connections are tight.

These inspections should be performed every year.

Grounds

Grounds should be checked that all connections are tight, non-corroded, and show no signs of overheating. Grounds should be checked for proper ground resistance. A clamp on ammeter may be used to ensure there is no excessive current flowing through the grounds. Current should be approximately 10 amps or less.

These inspections should be performed every year.

Cables

Cables should be checked for signs of mechanical damage such as accidental dig-in or cable movement. This would ensure the cable jackets have not cracked, or been scraped/eroded due to movement.

Cables entering terminators should be securely fastened to support grips/cable cleats minimizing cable strain to the terminators.

It is recommended that a jacket integrity test be performed to verify the integrity of the jacket, if mechanical damage is suspected or in the event the cable system undergoes a severe electrical transient condition. Lightning strikes and line-to-line or line-to-ground faults on connected above ground facilities are examples of unusual or severe transients.

These inspections should be performed every six months and the jacket integrity test every year.

2.9 Cable Failure Locating and Repair

In general, an underground transmission cable system is very reliable. The main reliability issue with an underground cable circuit compared to an overhead circuit is the length of the outage in the event of a circuit failure. With an overhead circuit, the line can generally be placed back into service in a relatively short amount of time, typically less than a day, thus increasing the circuit's availability for transmitting load. When there is a fault on an underground line, the line may be out of services for a significant amount of time, more than two weeks and up to 6 months, depending on the type of failure and how quickly it can be located and repaired. Because of these longer outage times an underground circuit has a lower circuit availability compared to an overhead circuit.

2.9.1 Fault Locating

One of the essential steps in repairing an underground cable failure is the step of accurately locating the cable failure. Locating a fault on an overhead line is relatively easy, but since an underground line is out of site specialized fault locating methods are needed. Faults can be located the same day technicians arrive on site, but may take up to a week depending on the type of fault, type of fault locating equipment and experience of the personnel operating the equipment.

The most common method of locating the fault location is to apply a capacitor discharge (thumper) signal and then detect the return signal using an acoustical/magnetic device.

The following sequence outlines the fault locating procedures:

1. The first step is to determine if the circuit fault occurred in the overhead or underground section of the line. This can be done by investigating the status of relaying after the event provided relaying equipment has been installed to monitor the underground segment independently of the overhead section of line. If this monitoring is not installed, the utility would need to drive the line to find evidence of a fault in the overhead or underground sections. The cable should be tested even if the fault is determined to be in the overhead section of the line.

2. Once it is determined the fault is in the underground section, the location of the failure needs to be determined. The primary cause of a cable fault may lead repair crews to the location as would be the case when the fault is due to a dig-in. Terminations and splices are common fault locations and should be visually inspected prior to assuming the fault is in the cable. If visual inspections fail to locate the failure, it can be assumed the fault is somewhere in the cable and special equipment is needed to locate the fault.

3. Two common methods for locating underground faults are the thumping method or VLF (very low frequency) detection. Both methods take specialized equipment. Utilities without substantial underground cable infrastructure typically contract with specialists to locate the fault.

2.9.2 Cable Repair

Once the fault is located in an XLPE cable, a special contractor would be needed to make the necessary repairs. This special contractor may be the cable manufacturer. The type of failure would determine the material needed to repair the faulted cable. This could mean having to install additional manholes, repair a damaged splice or termination, remove damaged cable and install a new cable. If multiple cables are damaged, new cable may need to be purchased.

The time required to repair a cable depends to a great extent on cable type and failure location. Failures can be repaired in only a few days but can take several months when new cable or accessories are needed.

3.0 CONCEPTUAL DESIGN

3.0 CONCEPTUAL DESIGN

Bonneville Power Administration (BPA) is proposing to install a new single circuit 500kV transmission line from a new proposed substation near Castle Rock, Washington extending approximately 70 miles south to a new proposed substation near Troutdale, Oregon.

BPA identified the study area and various possible overhead line routes. Each potential route was divided into a number of smaller segments. A map showing the study area and route segments is included in Appendix A. BPA narrowed the project area to two preliminary underground routes. These routes are constructed of a number of different route segments.

Eastern Route

Appendix A shows the general routing of the Eastern Route. Segments comprising this route are: 3, 7, 11, 21, 29, 34, 35, 49, 51, and 52. In locations where roadways provide the corridor for the underground installation, right-of-way widths may need to be reduced and additional engineering efforts may be required to determine impact to the cable sizing and availability of right-of-way.

Spanning a vast project area, installation methodology may further be altered by geological conditions to include rock or sand. In these locations alternate methods of installation may be required which often times have adverse affects to both schedule and budget. Furthermore, steep grades along the route may require supplementary engineering and/or alternate routing; while additional wetland areas often times require a non-evasive installation technique.

Route segments encroaching on urban areas will typically encounter the most stringent design and permitting guidelines however right-of-way can often be developed into existing roadway designs. In locations where the duct separation must be reduced, additional ampacity models will need to be developed during final cable design to ensure proper operation of the cable system. Furthermore, an all inclusive geotechnical report for the entire route, returning soil thermal resistivity values, water table depths, and ambient soil temperatures, will need to be performed to ensure cable design.

It has been assumed the route can be constructed using the open cut and HDD conceptual designs. During final route design, the trench details will need to be finalized to account for cable design, splicing/manhole locations, crossing requirements, land user agreements, easement requirements, and any county, state, and federal permitting requirements.

Along the route a significant number of crossings exist that will need some means of trenchless technology to install the cable system. These crossings include but are not limited to:’

- Interstate 5 (Segment 3)
- Kalama River (Segment 11)
- Lake Merwin (Segment 11)
- Lewis River (Segment 21)
- Canyon Creek (Segment 29)
- East Fork Lewis River (Segment 29)
- Little Washougal River (Segment 51)
- Camas Slough (Segment 52)
- Columbia River (Segment 52)

Western Route

Appendix A shows the general routing of the Western Route. Segments comprising this route are: 2, 4, 9, 25, 36, 41, 45, 50, and 52

Similar to the Eastern Route, the Western Route has a large majority of routing through rural areas in existing transmission corridors and have the same routing concerns.

Along the route a significant number of crossings exist that will need some means of trenchless technology to install the cable system. These crossings include but are not limited to:

- Cowlitz River (Segment 4)
- Interstate 5 (Segment 9)
- Coweeman River (Segment 9)
- Kalama River (Segment 9)
- Lewis River (Segment 25)
- East Fork Lewis River (Segment 25)
- Salmon Creek (Segment 25)
- Interstate 205 (Segment 25)
- Camas Slough (Segment 52)
- Columbia River (Segment 52)

Additionally, the new line may be constructed as a hybrid system with both overhead and underground portions, thus cost estimates on a per mile basis were prepared for urban, rural, and HDD installations.

3.1 Cable System Design

POWER investigated various trench configurations, number of cables per circuit and cable sizes to determine the appropriate designs for each route. Each cable system was analyzed using the following design criteria:

• Ultimate Ampacity Rating	4560 Amps
• Load Factor	75%
• Bonding Method	Cross-Bonded
• Conductor Type/Material	Segmental/Copper
• Insulation Type	XLPE
• Thermal Resistivity (p, rho)	
➢ Native Soil	90°C-cm/W
➢ Concrete Encasement	60°C-cm/W at 6% moisture
• Ambient Temperature	
➢ Earth	20°C
➢ Air	30°C
• Maximum Conductor Operating Temperature	
➢ Steady State	90°C
➢ Emergency	105°C
• Depth/Spacing	Varies depending on installation method

3.1.1 Open Cut Trench Design

Since the proposed alignments are almost all entirely rural installations, POWER has assumed a maximum trench depth of 5 feet, allowing for approximately 3 feet of cover. While other underground facilities along the route appear to be minimal, it is anticipated that some existing utility crossings will be encountered. Their crossings will need to be determined during final routing design, but in most cases can be crossed either above or below by means of open cut trenching. Where large crossings are required, jack and bore or HDD installation may be required. Figure 3-1 shows a conceptual design for all open cut trench installations to be placed within a 50 foot right-of-way predominantly in rural areas. To meet the power transfer requirements specified by BPA, three cables per phase are required resulting in construction of three independent duct banks; one per set of cables.

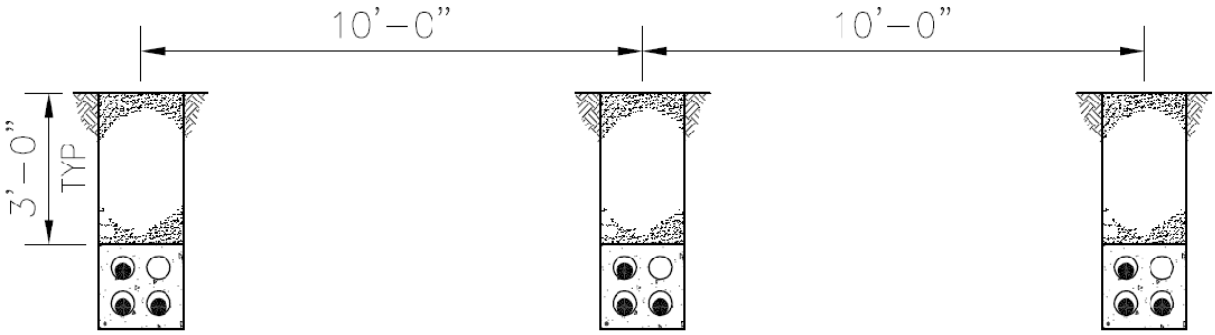

Figure 3-1 Open Cut Trench Design

HDD Design

Figure 3-2 shows a conceptual design for a large crossing HDD installation. The design has been developed utilizing typical design criteria as well as assumed environmental restrictions on depth and setbacks. Because of the depth required to install the product casing, the cable installation must be modified to four larger cables per phase to meet the target system ampacity. This larger cable reduces the total cable length that can be placed on a standard shipping reel, thus restricting the maximum HDD length to approximately 1300 feet. With a minimum casing separation of 20 feet, the right-of-way width must be increased to approximately 80 feet. Figure 3-5 shows the magnetic field for the initial HDD design. The calculations are based on the maximum ampacity of the installation, 4640 Amps.

It should be noted that at all HDD locations, a transition station will be required to transition between three cables per phase, for duct bank installation, to the four cables per phase required for HDD installation. The typical size requirements of the transition sites would be 100 by 150 feet. If sufficient space is not available on either side of the crossing, a fourth cable per phase could be installed for the entire route length.

It is anticipated that HDD installations will be utilized at all major waterway crossings as well as any crossings in excess of approximately 400 feet, or the maximum distance of a jack and bore installation. Because some segments have large waterway crossings, in excess of the 1300 foot limitation of the HDD installation, alternate routing, more cables per phase or other cable delivery methods may be required.

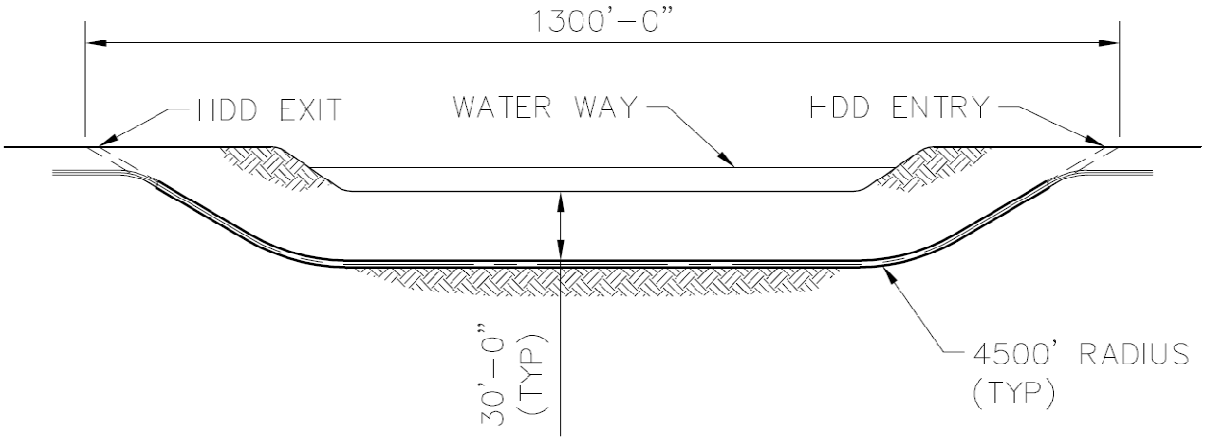

Figure 3-2 HDD Design

3.2 Electrical Characteristics

POWER Engineers, Inc. (POWER) performed preliminary cable ampacity calculations. POWER used CYME International's Cable Ampacity Program (CAP) to model the proposed cable system. Based on the designs developed for the ultimate rating, POWER investigated the number of cables per circuit that would need to be installed today to meet the initial ampacity rating of each design options. Table 3-1 shows the results of the ampacity calculations for each installation method. Table 3-2 shows the electrical characteristics for the cable size and routes.

TABLE 3-1 AMPACITY SUMMARY

CABLE TYPE	DESIGN	CABLE SIZE (KCMIL)	NO. CABLES/ CIRCUIT	AMPACITY/ CABLE (A)	TOTAL CKT MAX AMPACITY (A)	MINIMUM ROUTE ROW (FT)	MINIMUM TRANSITION SITE ROW (FT)
XLPE	Duct Bank	3500	3	1560	4680	50	250 x 150
	HDD	5000	4	1160	4640	80	350 x 150

TABLE 3-2 ELECTRICAL DESIGN SUMMARY

CABLE TYPE	DESIGN	CABLE SIZE (KCMIL)	DESIGN LENGTH (MI)	NO. CABLES/ CIRCUIT	SHUNT CAPACITANCE/ CABLE (µF/MI)	TOTAL SHUNT CAPACITANCE (µF/CKT)	REACTIVE CHARGING POWER/ CABLE (MVAR/MI)	REACTIVE CHARGING POWER (MVAR/CKT)	CHARGING CURRENT/ CABLE (A/MI)	TOTAL CHARGING CURRENT/CKT (KA)
EASTERN ROUTE	Duct Bank	3500	65.03	3	0.284	166.45	80.4	5229.0	30.95	18.12
	HDD	5000	0.25	4	0.316	0.932	119.0	29.28	34.36	0.102
WESTERN ROUTE	Duct Bank	3500	63.53	3	0.284	162.61	80.4	5108.13	30.95	17.70
	HDD	5000	0.25	4	0.316	0.932	119.0	29.28	34.36	0.102

3.3 Magnetic Field Calculations

Figures 3-3 and 3-4 show the magnetic field for the open cut trench and HDD designs, respectively. The calculations are based on the maximum ampacity of the installation, 4680 Amps.

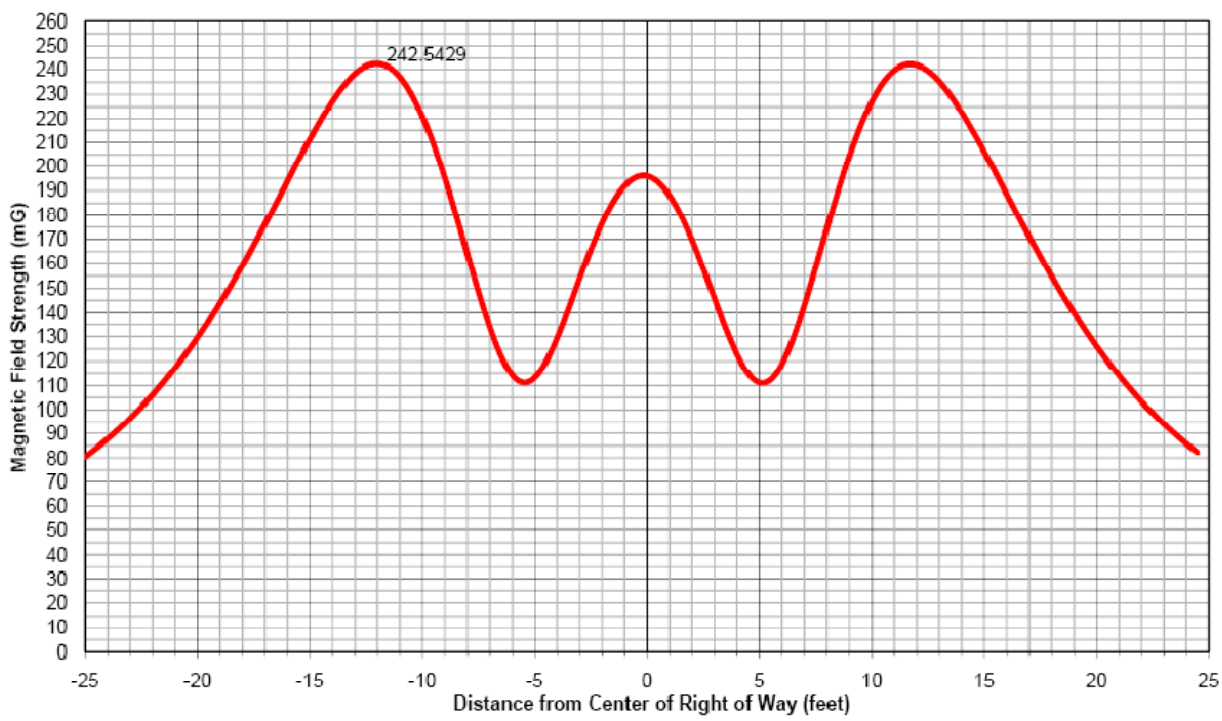

Figure 3-3 Open Cut Trench EMF Calculations

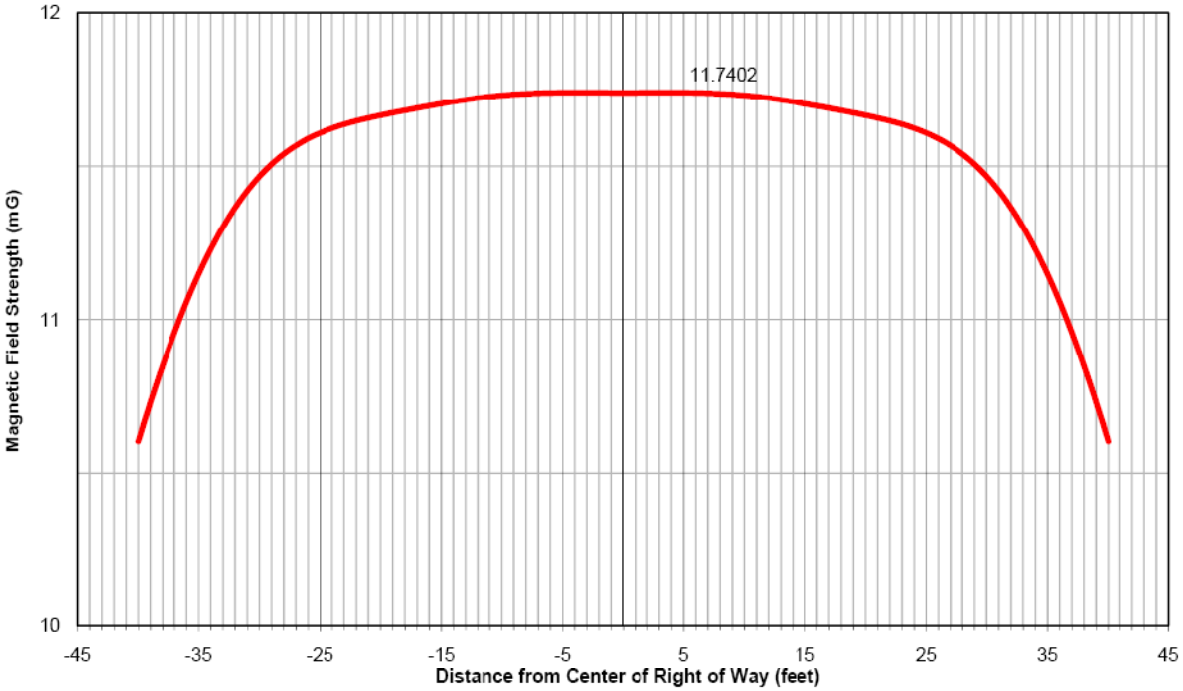

Figure 3-4 HDD EMF Calculations

4.0 COST ESTIMATES

4.0 COST ESTIMATES

4.1 Introduction

The cost estimate is based on pricing obtained from manufactures in early 2010 and recent underground projects. There are many factors that affect the overall cost of an underground project. These factors are:

1. Cost of materials. Recent increases in the cost of copper have resulted in a significant increase in the cable cost.

2. Contractor/Manufacturer availability.

3. Subsurface conditions. The type and depth of soil and rock that must be excavated to place the cable can dramatically impact the cost. For example, construction costs in rock formations are significantly higher than construction costs in clay soils. The presence of existing underground facilities also presents a significant uncertainty when estimating the cost of an underground project.

4.2 Cost Estimate Assumptions

1. Costs represent direct cost to BPA and do not include staff costs, tax, or interest accrued during construction.

2. Costs are in 2010 dollars. No escalation included.

3. Materials used in the cost estimates meet all applicable industry standards.

4. Cross-bonding of XLPE cable sheaths was assumed.

5. Construction would be performed by qualified craftsmen experienced in installing high voltage underground transmission systems.

6. BPA to obtain all environmental, local, state, and federal permits as required. The estimates in this document do not include these costs.

7. BPA to obtain all necessary right-of-way and property. The estimates in this document do not include these costs.

8. No spare cable or parts have been included in the estimate.

9. 15% contingency has been added to material and labor costs.

10. Reactive compensation costs have not been included in these costs.

11. Excavation costs were estimated based on geological study.

12. Due to market volatility these costs are subject to market fluctuations.

4.3 Summary of Cost Estimates

A summary of the costs for each proposed cable system investigated have been included in the tables below.

4.3.1 East Route

Segment	Length (l-ft)	Material Cost	Labor Cost	Estimated Cost
3	39,500	$111,411,500	$44,868,027	$156,279,527
7	10,500	$28,994,232	$11,310,107	$40,304,339
11	144,000	$407,271,189	$164,511,123	$571,782,312
21	7,000	$22,967,283	$10,721,450	$33,688,733
29	76,500	$212,866,053	$83,802,599	$296,668,652
34	13,000	$35,413,244	$13,682,902	$49,096,146
35	18,000	$49,704,668	$19,390,553	$69,095,221
49	17,000	$46,506,087	$17,766,552	$64,272,639
51	11,000	$30,285,883	$11,675,260	$41,961,143
52	24,000	$81,747,635	$41,933,313	$123,680,948
Total	**360,500**	**$1,027,167,774**	**$419,661,886**	**$1,446,829,660**

4.3.2 West Route

Segment	Length (l-ft)	Material Cost	Labor Cost	Estimated Cost
2	33,000	$92,254,863	$36,716,798	$128,971,661
4	4,000	$12,865,188	$6,238,060	$19,103,248
9	101,400	$284,267,471	$112,779,092	$397,046,563
25	162,500	$464,025,184	$189,896,395	$653,921,579
36	6,000	$16,970,102	$6,934,673	$23,904,775
41	6,500	$17,829,830	$6,881,025	$24,710,855
45	5,000	$13,509,137	$5,099,532	$18,608,669
50	18,250	$50,591,807	$19,793,024	$70,384,831
52	24,000	$81,747,635	$41,933,313	$123,680,948
Total	**360,650**	**$1,034,061,217**	**$426,271,912**	**$1,460,333,129**

4.3.3 Unit Costs

Segment	Length (l-ft)	Material Cost	Labor Cost	Estimated Cost
Country	5,280	$14,529,560	$5,447,953	$19,977,513
Mountain	5,280	$14,466,310	$7,258,225	$21,724,535
Urban	5,280	$14,853,745	$5,230,258	$20,084,003
HDD	1,500	$10,370,240	$7,208,143	$17,578,383
Transition	500	$2,272,314	$1,044,632	$3,316,946

Appendix A

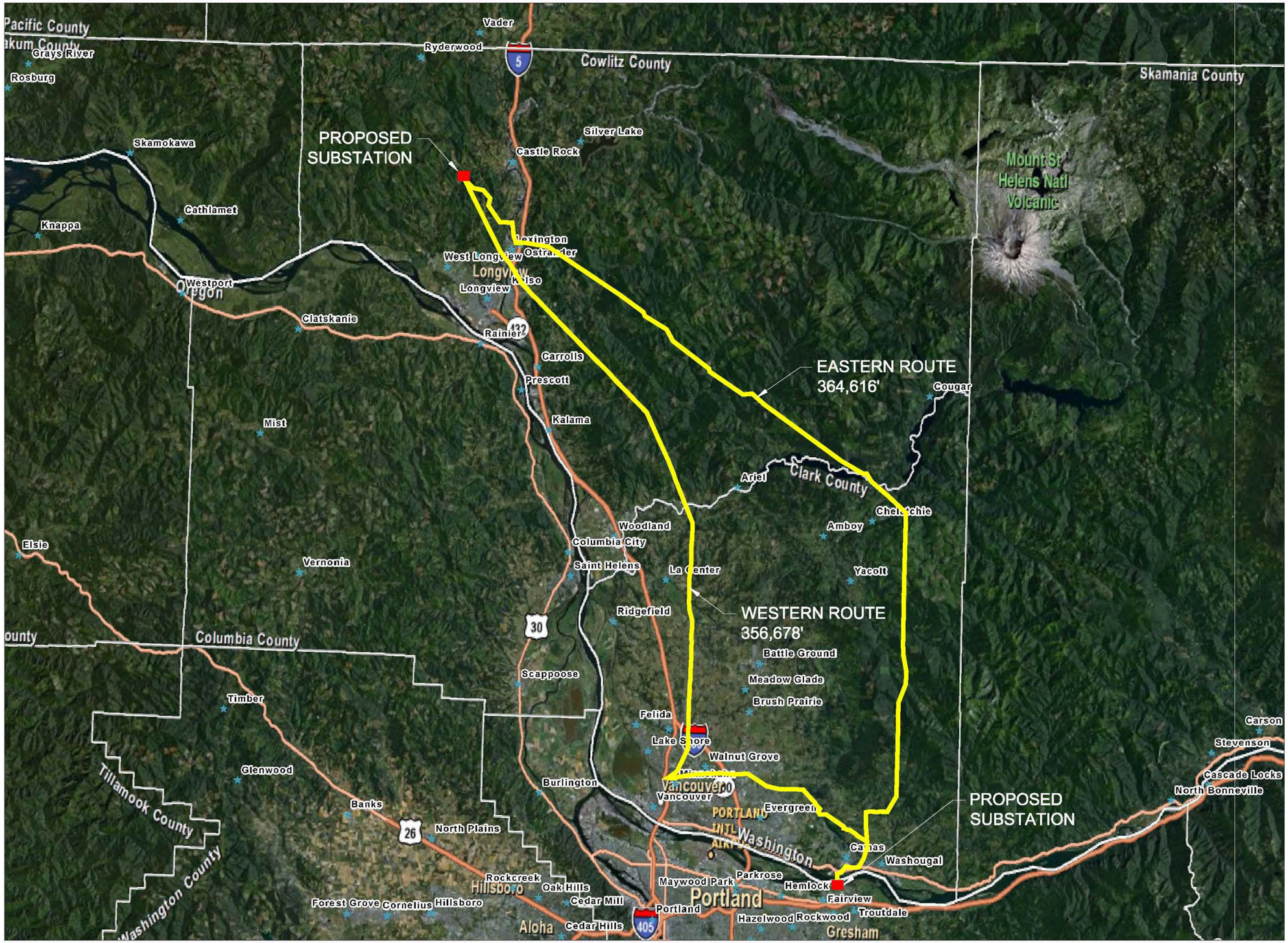

THIS DRAWING WAS PREPARED BY POWER ENGINEERS, INC. FOR A SPECIFIC PROJECT, TAKING INTO CONSIDERATION THE SPECIFIC AND UNIQUE REQUIREMENTS OF THE PROJECT. REUSE OF THIS DRAWING OR ANY INFORMATION CONTAINED IN THIS DRAWING FOR ANY PURPOSE IS PROHIBITED UNLESS WRITTEN PERMISSION FROM BOTH POWER AND POWER'S CLIENT IS GRANTED.

21xxx\10_1.dwg

REV	REVISIONS	DATE	DRN	DSGN	CKD	APPD
A	ISSUED FOR REVIEW	07/02/10	BOQ	BJH	BJH	JAJ

REFERENCE DRAWINGS

DSGN	BJH	06/15/10
DRN	BOQ	06/15/10
CKD	BJH	06/15/10

SCALE: AS SHOWN

FOR 22x34 DWG ONLY

POWER ENGINEERS
www.powereng.com

BONNEVILLE POWER ADMINISTRATION

I-5 CORRIDOR PROJECT

ROUTE ALIGNMENTS

JOB NUMBER 119864

REV A

DRAWING NUMBER P2-1

Appendix B

I. EXTRUDED DIELECTRIC CABLE SYSTEMS

HVED cable installations in the US are commonly in concrete encased duct banks because direct burial and tunnel installations have not proven reliable or economically feasible. Therefore, this report will look solely at HVED cable systems from a duct bank installation standpoint.

HVED cables have been used extensively in North America at voltages 138 kV and higher since the mid-1980s, and have seen extensive use overseas since the 1970's. XLPE-insulated cables have been used at 500 kV and higher throughout the world since the late 1990's. Two long, over 25 miles, 500kV installations have been in service in Japan since 2001. Installation of several major 345kV XLPE cable systems, totaling more than 100 circuit miles, have been installed in the US in the last 10 years.

A. Cable

The components of a typical dielectric cable are shown in Figure 2-1. The typical cable consists of a stranded copper or aluminum conductor, inner semi-conducting conductor shield, extruded solid dielectric insulation, outer semi-conducting shield, a metallic moisture barrier, and a protective jacket.

Insulation materials used for solid dielectric cables include:

- Thermoplastic Polyethylene Compounds

  Typical thermoplastic polyethylene insulation materials are low density polyethylene (LDPE), high molecular weight polyethylene (HMWPE) and high density polyethylene (HDPE).

- Thermosetting Compounds

  Ethylene propylene rubber (EPR) and cross-linked polyethylene (XLPE) are typical thermosetting insulation compounds.

For voltages over 69 kV, the preferred insulation in the United States for a HVED cable system is XLPE. This is due to the higher dielectric losses associated with EPR-insulated cables.

Materials used for semi-conducting extruded conductor and insulation shields are semi-conducting PE, XLPE and EPR compounds. PE compounds are used with PE and XLPE insulation, XLPE compounds with XLPE insulation, and EPR compounds with EPR insulation.

Cable Jackets are typically extruded PE and on rare occasions polyvinyl chloride (PVC)

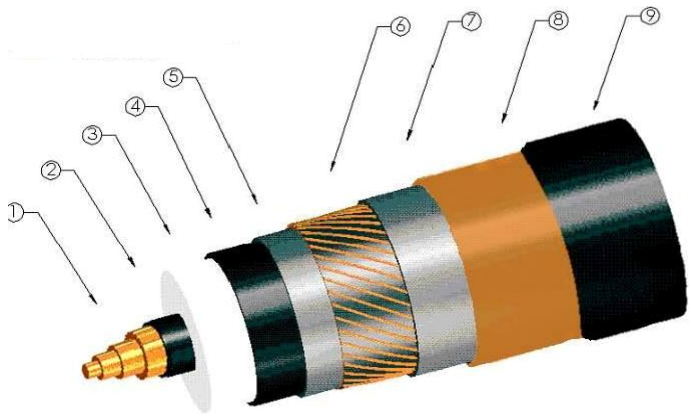

1 - CONDUCTOR
Material: copper

2 - INNER SEMI-CONDUCTIVE SHIELD

3 - EXTRUDED SOLID DIELECTRIC INSULATION
Material: cross-linked polyethylene

4 - OUTER SEMI-CONDUCTIVE SHIELD

5 - SEMI CONDUCTIVE SWELLING/BEDDING TAPES

6 - CONCENTRIC COPPER WIRE METALLIC SHIELD

7 - SEMI CONDUCTIVE SWELLING/BEDDING TAPES

8 - MOISTURE BARRIER/SHEATH
Material: copper, aluminum, lead, or stainless steel

9- PROTECTIVE JACKET
Material: medium density polyethylene

Figure 2-1 Typical Solid Dielectric Cable Cross-Section

The manufacturing process for extruded cables is of critical importance in ensuring a reliable end product. Triple extrusion is the preferred and recommended technique. Most transmission cable manufactures use this “true triple head” extrusion technique today. Microscopic voids and contaminants can lead to cable failures. As such, quality control during manufacture of extruded dielectric cables is critical to minimize moisture contamination, voids, contaminants and protrusions. Manufacturers minimize insulation contamination by using super clean insulation compounds; transporting and storing the compounds in sealed facilities; and screening out contaminants at the extruder head.

B. Cable Accessories

The three basic cable accessories for extruded dielectric cables are splices, terminations and sheath bonding materials.

Splices

Pre-fabricated or pre-molded splices are commonly used to joint extruded dielectric cables. Cable preparation for these types of splices is generally the same. Insulation and shields are removed from the conductor; and the insulation is penciled. The conductor ends are then joined by a compression splice or MIG welding (aluminum conductor only). An advantage of these types of splices is that all parts can be factory tested prior to field installation. Figure 2-2 shows a typical pre-molded splice.

Figure 2-2 Typical Pre-molded 345kV XLPE Splice

Terminations

Terminations are available for extruded dielectric cable to allow transitions to overhead lines or above ground equipment. Termination bodies are typically made of porcelain or polymer and include skirts to minimize the probability of external flashovers due to contamination. Figure 2-3 shows a typical XLPE termination.

Figure 2-3 Typical 345kV XLPE Termination

Sheath Bonding

Another important component of an HVED cable system is the grounding/bonding of the cable shield. A typical underground distribution system grounds the shield at each splice and termination point. However, bonding method, known as multi-point bonding, enables circulating currents to be developed on the cable shield resulting in additional heating in the cable and ultimately resulting in reduced power transfer. The way to maximize the ampacity of an underground cable is to eliminate the circulating currents. This is accomplished by using special bonding methods such as single-point and cross-bonding. These methods eliminate or reduce the amount of current, which would flow on the cable shield resulting in no or limited additional heating and therefore higher ampacity ratings.

II. SELF CONTAINED FLUID FILLED (SCFF) CABLE SYSTEM

A. Introduction

While AC SCFF cable has historically been used extensively outside of the United States, there are very few SCFF currently in operation in the US. As older SCFF lines are retired, they are being replaced with XLPE-insulated cables. SCFF cables have been manufactured for AC system voltages from 69 kV up to 525 kV, and tested up to 1100 kV. There is one relatively short 525-kV SCFF AC cable installation in the US, in Grand Coulee Dam.

B. Cable

A SCFF cable system consists of installing three individual single-core cables in a duct system or direct buried.

The SCFF cable consists of a hollow copper conductor which is filled with dielectric fluid typically pressurized to 3-60 psig, high quality Kraft paper or laminated paper polypropylene insulation, outer shielding, and a sheath which is covered by a plastic jacket. Cable jackets are typically extruded polyethylene (PE). The metallic sheath is typically aluminum or an extruded lead-alloy. In this construction the metallic sheath serves both as a hermetic moisture seal and as a pressure containment vessel. In the case of a lead sheath, bronze tapes are frequently required to strengthen the lead sheath and to keep it from deforming due to the cable pressure.

While cables with Kraft paper had a proven track record at voltages below 345kV, the industry identified in the mid 1980’s that in order to achieve higher voltages a new insulation was needed to reduce the dielectric losses of the insulation. In 1985, a new paper insulation, laminated paper polypropylene (LPP), was introduced to the paper cable industry for use on EHV cables. LPP insulation utilizes a composite construction involving a layer of low-loss, electrical-grade, homocast polypropylene film (unoriented), bonded without adhesive between two layers of high-purity Kraft electrical-insulating paper. This laminate tape looks and handles like a paper-insulating tape of equal thickness. The LPP composite is manufactured by laminating an extruded polypropylene film that is sandwiched, while hot, between two cellulose-paper layers. The three layers are bonded using two pressure rollers. No adhesive or copolymer materials are used in making the LPP laminate.

The major advantages of LPP over conventional paper in EHV cables are due to the polypropylene film and include the following:

- Lower dielectric loss
- Higher ac and impulse strength
- Thinner insulation walls
- Higher ampacity ratings

In a SCFF cable, the central duct is filled with dielectric fluid. This fluid is allowed to flow through the wires of the conductor into the insulation. The volumetric change in the fluid due to the heating effects of load currents is compensated by connecting the duct to fluid reservoirs or tanks at intervals along the route using special “stop” or feed joints or at the ends of the route. When the cable cools, the fluid is driven back into the cable by maintaining the reservoirs at a positive pressure at all temperatures. The pressure is kept as low as possible, consistent with the profile of the route, and the minimum pressure is typically 3 psig. A low-viscosity impregnant is chosen to ensure that the fluid may flow readily through the duct, especially during heating and cooling transients and thus maintain the internal pressure within the design range. As the fluid flows freely throughout the insulation, the cable has some self-healing properties, because there are no voids in the insulation or joints.

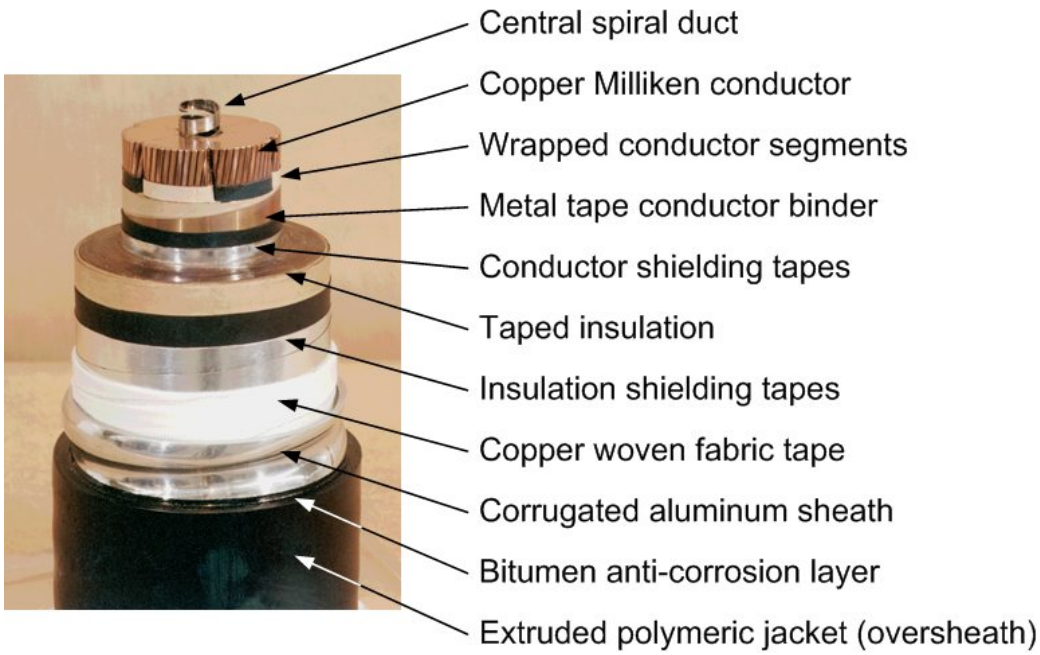

Typical SCFF Cable Cross-Section

The manufacturing process is as follows: a conductor core is helically wound with layers of metalized or carbon black paper tape for the conductor; high quality Kraft paper or paper/polypropylene laminate is then helically wound around the conductor in multiple layers for the insulation; additional layers of metalized or carbon black paper tape helically wound around the insulation to form the insulation shield. Prior to the installation of the sheath and jacket, the cable is dried and placed into impregnating tanks. After the cable is impregnated with the appropriate dielectric fluid, fabric tapes are wound around the core to provide a bedding layer to absorb any expansion and contraction of the cable core under the sheath. The outer sheath and jacket is then extruded on to the core.

As well as electrical performance, it is necessary for the cable to have a satisfactory mechanical performance. For large insulation thicknesses, it is usually necessary to have thicker paper tapes on the outside of the cable to achieve this. Thus the density of the papers may be varied in the wall of the insulation.

C. Cable Accessories

The three basic cable accessories for extruded dielectric cables are splices, terminations and sheath bonding materials.

Splicing of each SCFF cable begins with removal of the outer sheath and jacket and the insulation is step-penciled. The conductor ends are then joined by compression connector or MIG welding (aluminum conductor only). Insulation paper tape is wound around the spliced conductor, filling the step-penciled area of the insulation. Metalized tapes or carbon black tapes are used to re-establish the conductor and insulation shields. An outer joint casing is placed around the jointed cable to provide a continuation of the outer sheath and contain the fluid in the cable.

Terminations are available for SCFF cable to allow transitions to overhead lines or above ground equipment. Termination bodies are typically made of porcelain and include skirts to minimize the probability of external flashovers due to contamination.

Once the cable installation is completed the cable is filled with filtered synthetic dielectric fluid and pressurized to a nominal 2-60 psig depending on the cable system design. To maintain these pressures during the operation of the cable system, pressure reservoirs are placed at one end, at intermediate locations or at both ends depending on the cable system design. If significant elevation changes exist along the route, reservoirs may be required at these locations as well. If higher pressures are needed, a special pressurization plant is needed. Regardless of the type of pressurization system, a monitoring system is required at each pressurization point. The monitoring equipment controls the operation of the system and communicates the system status to the utility. This is the biggest disadvantage of the SCFF system.

Another important component of a SCFF cable system is the grounding/bonding of the cable shield. Unlike an underground distribution system, which grounds the shield at each splice and termination, an underground transmission line requires alternative grounding/bonding methods. Grounding at each splice and terminations causes circulating currents to be developed on the cable shield resulting in additional heating in the cable and lower ampacity. The way to maximize the ampacity of an underground cable is to eliminate the circulating currents. This is accomplished with underground transmission cables by using special bonding methods such as single-point and cross-bonding. These methods eliminate or reduce the amount of current, which would flow on the cable shield resulting in no or limited additional heating and ultimately a higher ampacity.

When connecting a SCFF cable system directly to an overhead line, a small fenced transition station consisting of an A-frame structure and termination stand. The pressure reservoirs would be mounted near each termination. A larger transition station would be required if a larger pressurization plant would be required.