Spill Gate Trunnion Bushing Failure

Recovery and Lessons Learned

Garrett Bishop
Manager Engineering & Construction
Idaho Power Company

Bliss Dam

Hydroelectric Facilities and Nameplate Capacities

1	Hells Canyon	391.5 MW
2	Oxbow	190.0 MW
3	Brownlee	585.4 MW
4	Cascade	12.4 MW
5	Swan Falls	27.2 MW
6	C. J. Strike	82.8 MW
7	Bliss	75.0 MW
8	Lower Malad	13.5 MW
9	Upper Malad	8.3 MW
10	Lower Salmon	60.0 MW
11	Upper Salmon	34.5 MW
12	Thousand Springs	8.8 MW
13	Clear Lake	2.5 MW
14	Shoshone Falls	12.5 MW
15	Twin Falls	52.9 MW
16	Milner	59.4 MW
17	American Falls	92.3 MW
	Total	1,709.0 MW

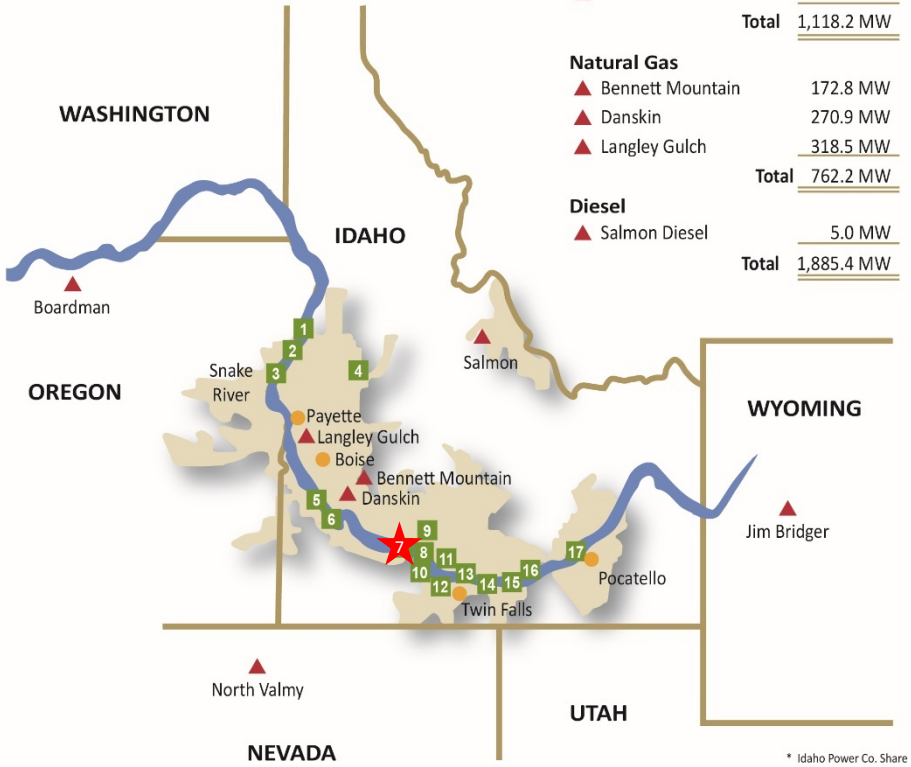

Thermal Facilities And Capacities

Coal

Jim Bridger	770.5 MW*
North Valmy	283.5 MW*
Boardman	64.2 MW*
Total	1,118.2 MW

Natural Gas

Bennett Mountain	172.8 MW
Danskin	270.9 MW
Langley Gulch	318.5 MW
Total	762.2 MW

Diesel

Salmon Diesel	5.0 MW
Total	1,885.4 MW

* Idaho Power Co. Share

- Built 1948-9
- 216’ long
- 3 units
- 75mw total
- 70’ net head
- 4 main spill gates
- 1 sluicing spill gate

Main Gates

- 39’ wide X 30’ high
- 110,000 lbs each

Trunnions

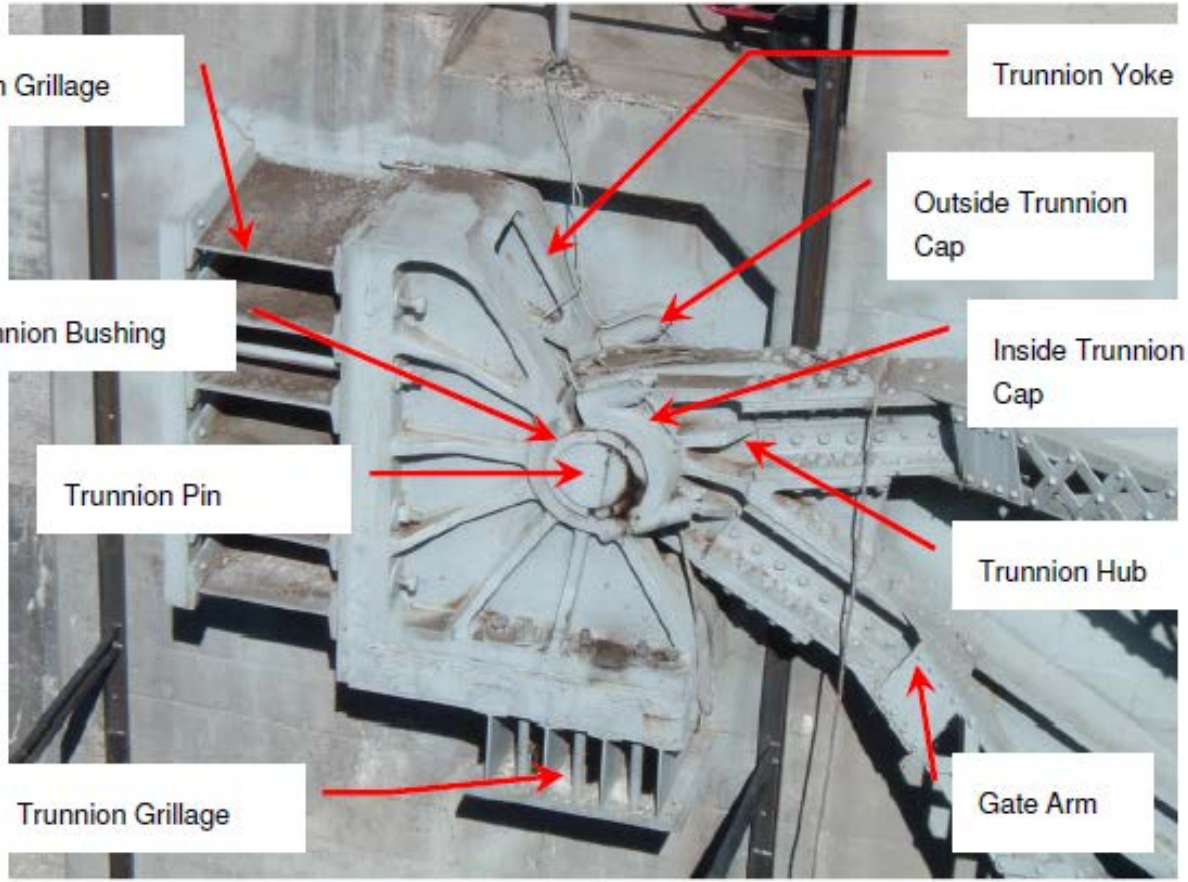
Trunnion Grillage
Trunnion Yoke
Outside Trunnion Cap
Trunnion Bushing
Inside Trunnion Cap
Trunnion Pin
Trunnion Hub
Trunnion Grillage
Gate Arm

Planned Maintenance

- Summer 2009
  - Chains replaced on gates 2&3
  - Plan-replace chains on remaining gates in 2010
- Summer 2010
  - Maintenance outage - crew identified broken bolts on trunnion cap on radial spill gate #4

08.01.2010 01:33

Potential Contributing Factors

Observations during last full open test (April 2009)

- Lifting chains in poor condition
- Popping, creaking, banging noises - attributed to worn chains
- Chains froze temporarily a few times, potentially causing gate racking
- Side rollers were in poor condition and didn’t appear to move freely
- During trunnion greasing, we did not notice broken trunnion cap bolts
- Concluded-no other damage and the cap is not load bearing: RCA and repair

12.02.2010 16:09

Disassembly

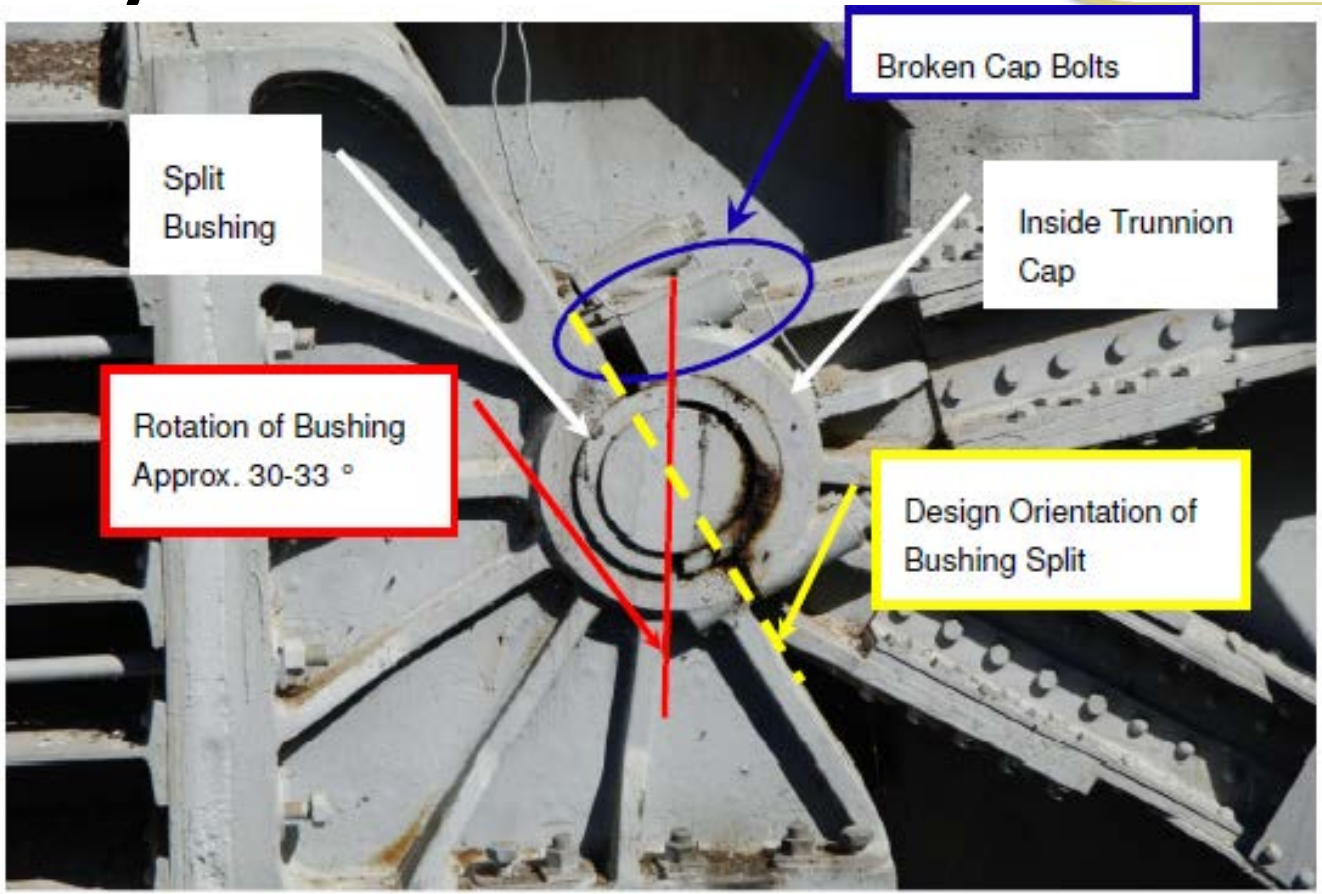

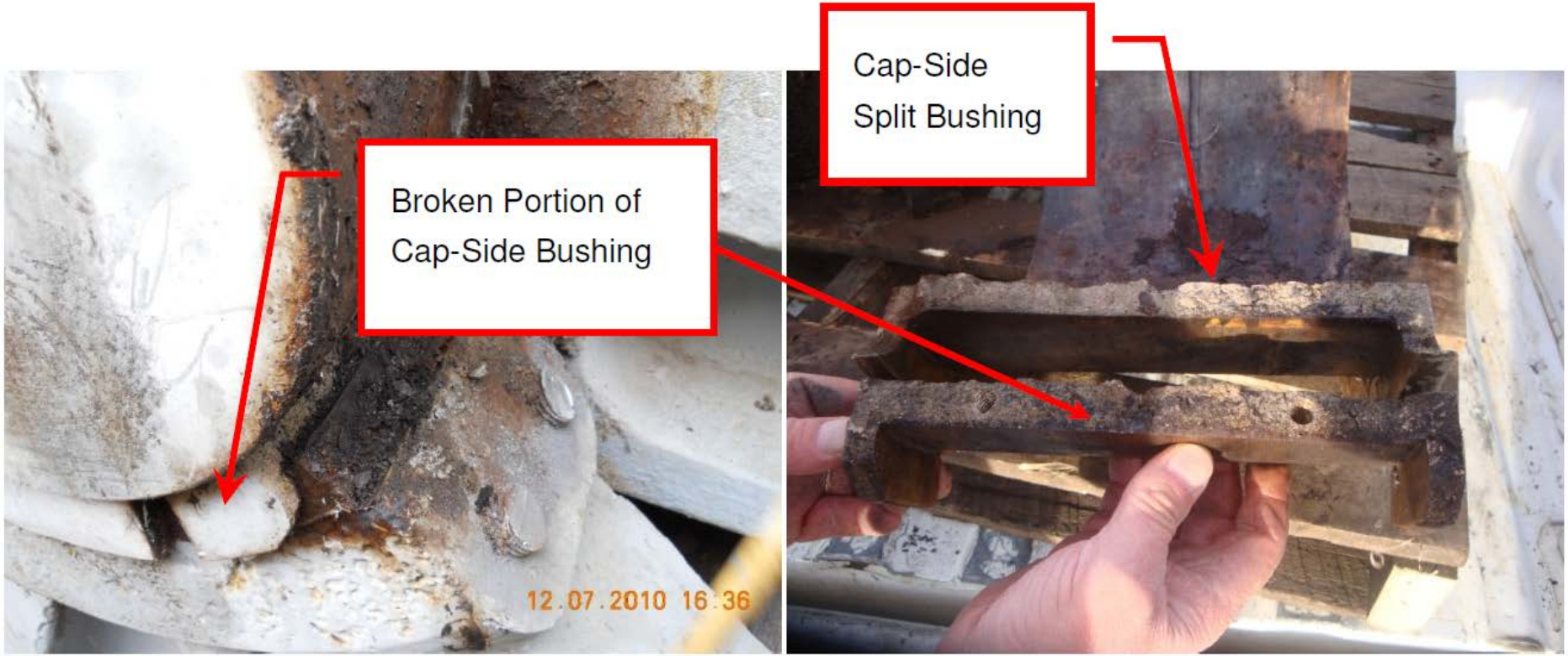

Figure 7. Gate 4, North Trunnion Broken Split Bushing

Disassembly

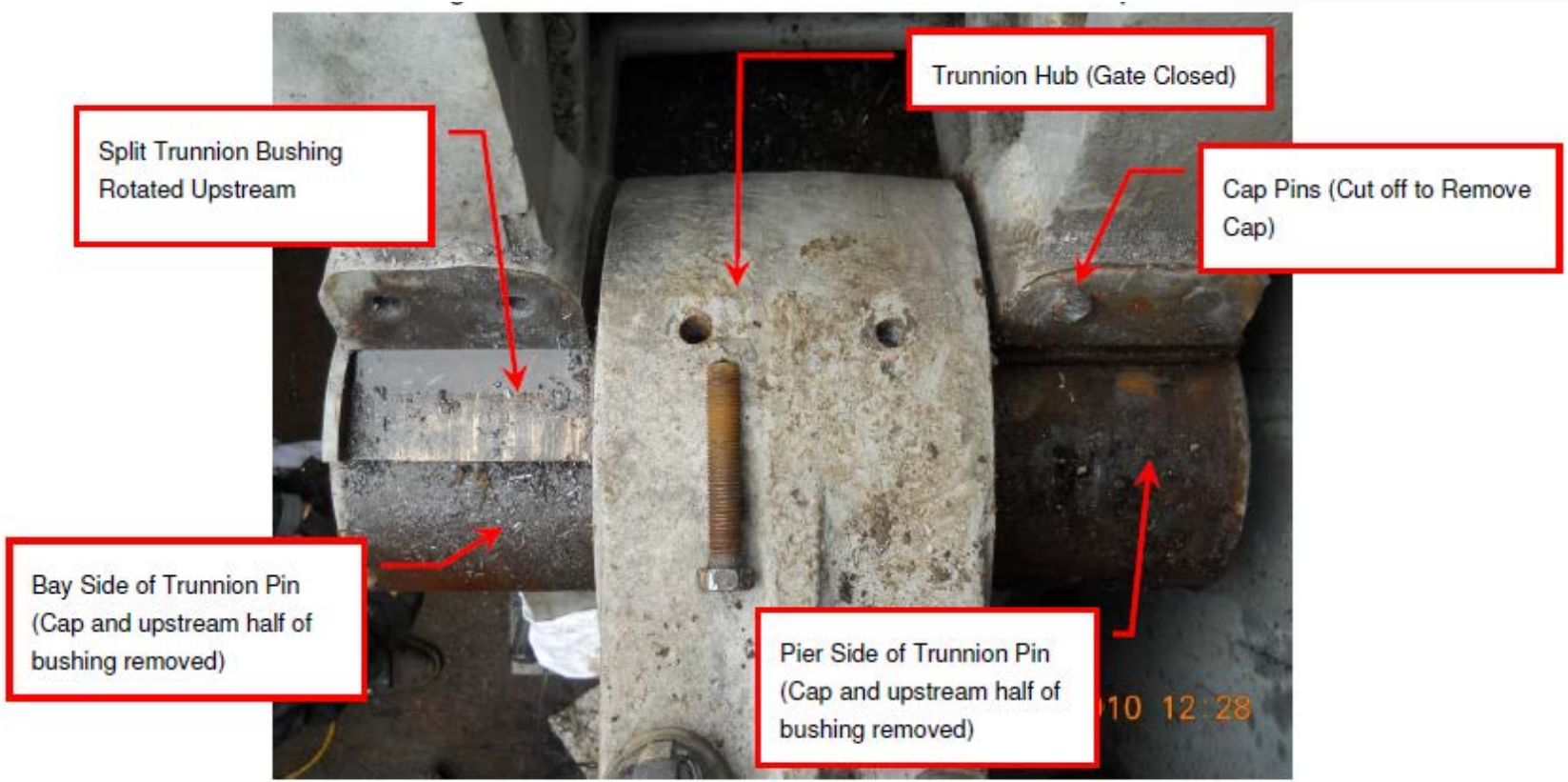

Figure 6 Gate 4, North Trunnion. Trunnion Caps Removed.

Figure 8. Gate 4, Trunnion Pin after Cap/Bushing Removal

Figure 10. Downstream Half of Inside Trunnion Bushing.

11.19.2010 14:01

11.19.2010 13:59

Figure 9. Inside Portion of Trunnion Pin (Cut Off at Face of Trunnion Hub).

Investigation Conclusions

- Relatively large friction forces must have been present
- Bolts breaking and bushing breaking did not occur at the same time, based on
  - Condition of the fracture planes of the bolts indicates they were not broken recently
  - Break in split bushing was recent and believed to be caused by the separation of the cap
- Gates have been subject to unbalanced loading multiple times. However, FEA could not produce trunnion reactions to indicate this being a source of the bolt failure.

Theory of Cause of Failure

- Bolts likely over-tightened initially, causing cracks that propagated over time
- Foreign matter infiltrated bushing/pin interface
- Grease gathered in unloaded side of bushing/pin
- Corrosion built and applied additional pressure, eventually breaking the bolts
- High friction sheared anti-rotation pin in bushing
- Bushing rotated as gate closed during the last gate operation

Recommended Actions

- Strain gate testing
  - Determine actual friction coefficients seen and compare to arm design and 0.30 friction coefficient used in previous analyses
  - Determine how widespread this issue was on similar gates
- Inspection/Rehab program for similar gates
  - Greaseless bushings and stainless steel pins

Multiple Paths

- Identified and inspected all similar gates
- Design studies
- Conversion to greaseless bushings and stainless pins
- Expanded our gate arm strain gage testing program to cover this design in our system

Identification of Similar Gates

- 4 remaining gates at the Bliss Dam
- Identified another dam with 8 similar gates
- Inspection and testing

Design Studies

- Side rollers
  - Adequate, necessary
- Gate arm strength
  - sufficient
- Bushing design review
  - Greaseless bushings

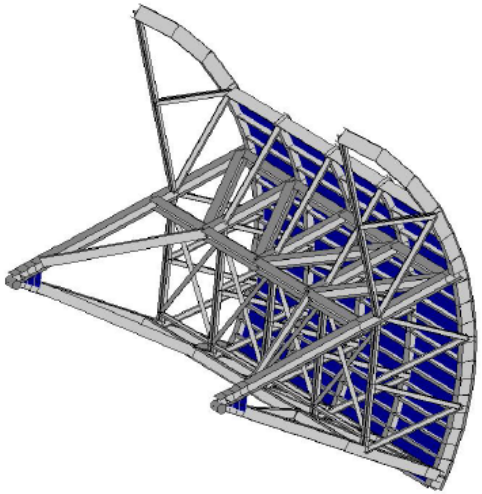

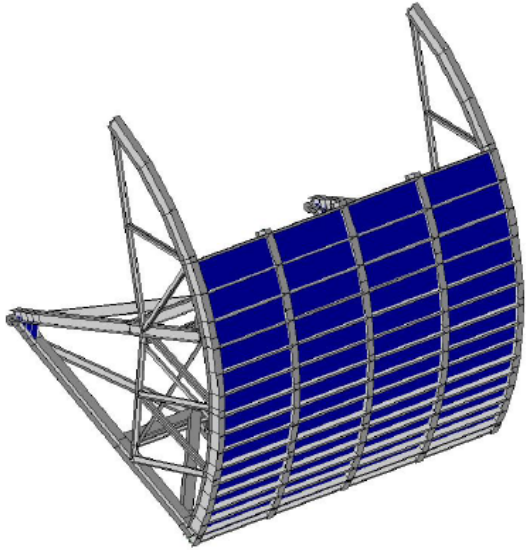

Refurbishment Scope of Bliss Gates

- New greaseless bushings
- New stainless steel pins
- Blast and paint
- New lift chains
- New gate seals and side spring plates
- Refurbish side rollers

Challenges and Lessons Learned

- 5 gates refurbished
- Planning to refurbish remaining 8 similar gates
- Ongoing trunnion friction testing program

Floating Bulkhead

Floating Bulkhead

Floating Bulkhead

Floating Bulkhead

Access

Access

Access

Access

Access

Access

Access

Access

Access

Access

Access

Work continued over several years, covering all 4 seasons

Chain Replacement

Chain Replacement

Seals and Spring Plates

Seals and Spring Plates

Seals and Spring Plates

Seals and Spring Plates

Side Rollers

Side Rollers

Greaseless Bushings

Bushing Suppliers Considered

- Lubrite
- Deva/Federal Mogul
- Kamatics Corporation
- Thordon Technologies

Shipping Damage to Bushings

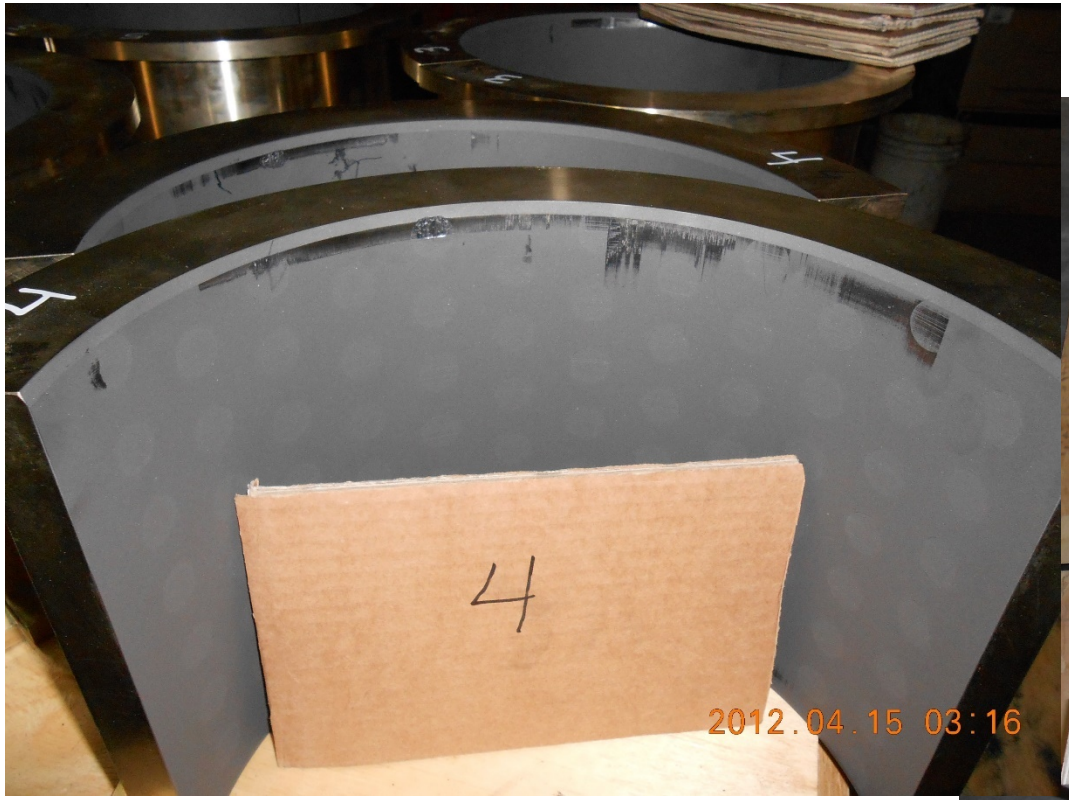

Shipping Damage to Bushings

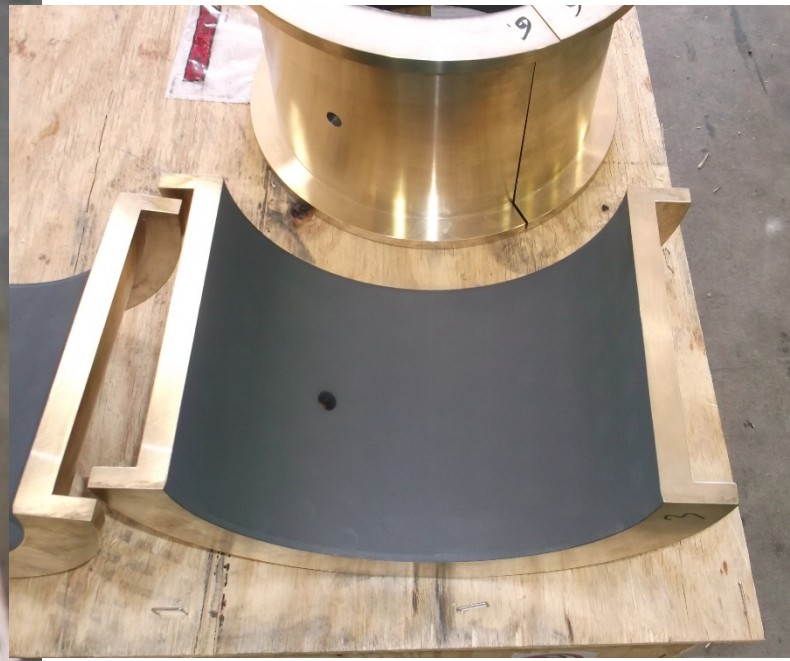

Bird Spikes

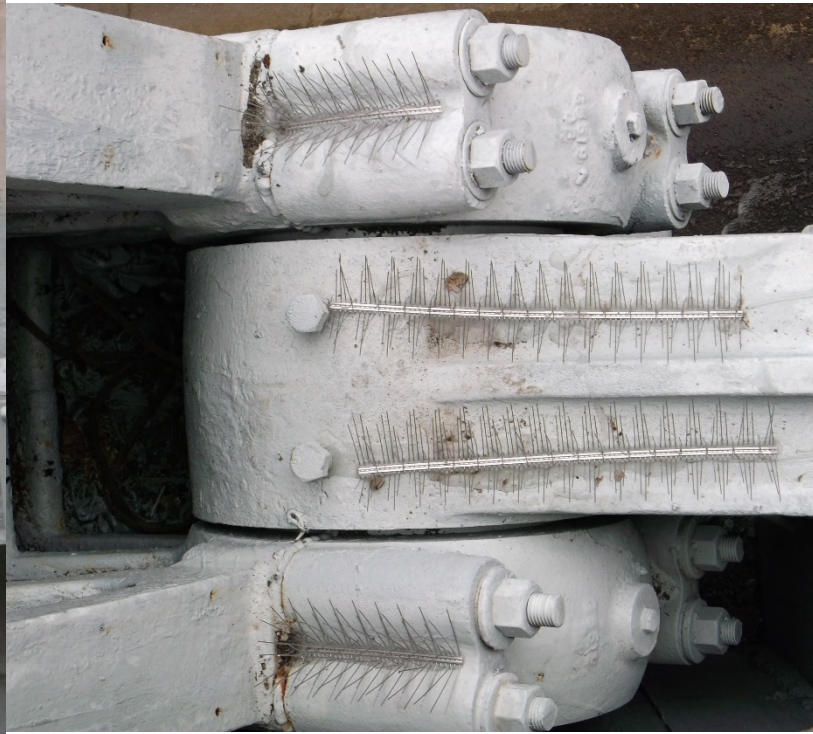

Pin Removal

- Heating
- Cooling
- Pushing
- Hammering
- Finally cutting it out

Pin Removal

Pin Removal

Pin Removal

Pin Removal

Pin Removal

Wire Saw (IPC built)

Wire Saw (IPC built)

Wire Saw (IPC built)

Wire Saw (IPC built)

New Pins

Testing

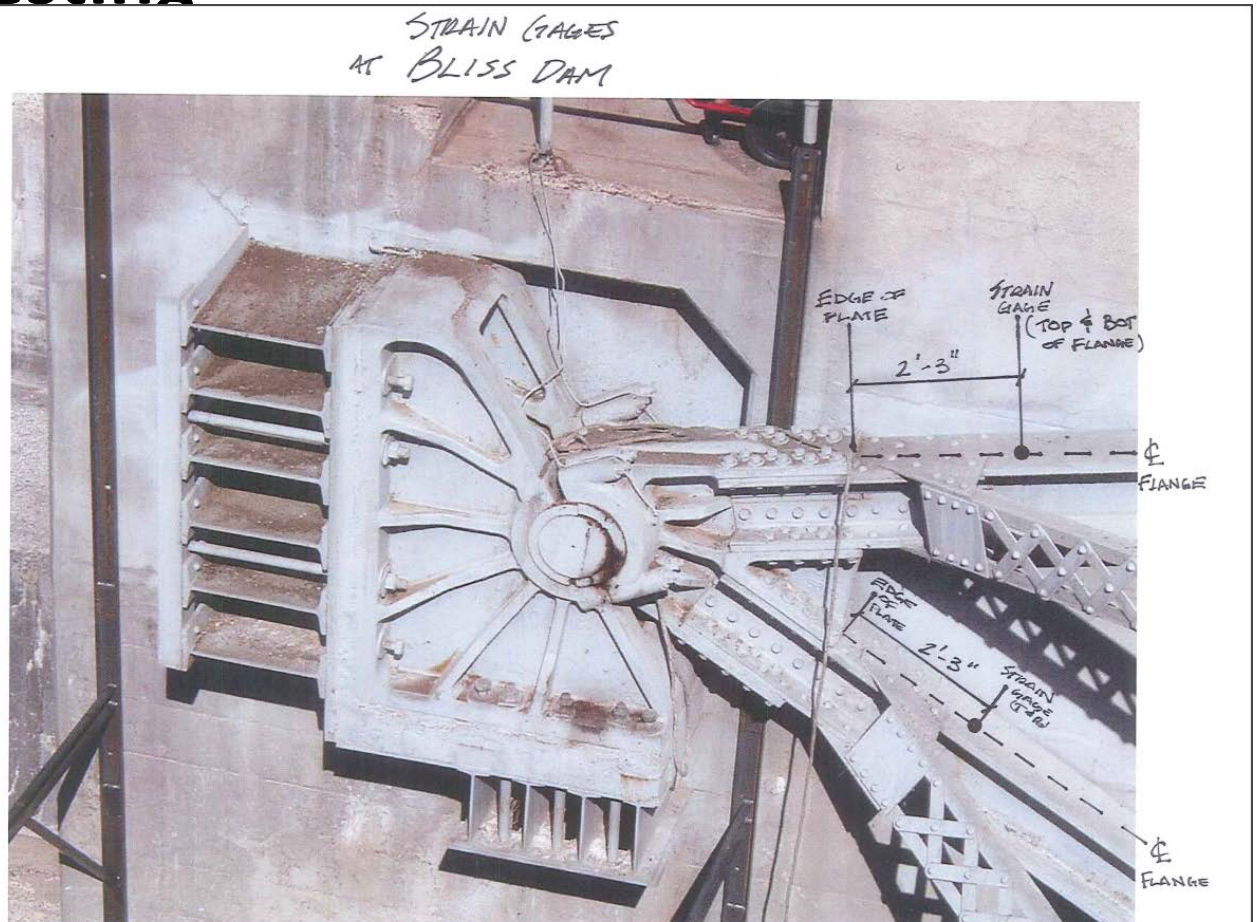
STRAIN GAGES
AT BLISS DAM
EDGE OF PLATE
STRAIN GAGE
(TOP & BOT OF FLANGE)
2'-3"
℄ FLANGE
EDGE OF PLATE
2'-3"
STRAIN GAGE (T-Rs)
℄ FLANGE

Questions?

Garrett Bishop, P.E.
MANAGER, ENGINEERING & CONSTRUCTION
Idaho Power | Power Supply

208-388-2479
gbishop@idahopower.com