NERC ATC Standards Implementation Project

June 14, 2010

AGENDA

- FERC Order 729-A Update
- NERC ATC Project Diagram
- New Paths and Flowgates
- Updated PUFs and Hourly AFC
- Calculations of firm Existing Transmission Commitments
- Adjacent TSP impacts and TRM
- ATC Implementation Documents
- Next Steps

FERC Order 729 Update

- On November 24, 2009, FERC issued Order 729 approving and directing modifications the suite of six ATC Modeling, Data and Analysis (MOD) Standards to be effective no earlier than April 1, 2011.
- NERC filed a rehearing request on Order 729 to make the effective date of the Standards in the United States January 1, 2011. FERC confirmed this new effective date in its issuance of Order 729-A on May 5, 2010.
- On June 4, 2010, BPA filed a request for rehearing to make the effective date July 1, 2011 or at least no earlier than April 1, 2011.

NERC ATC Project

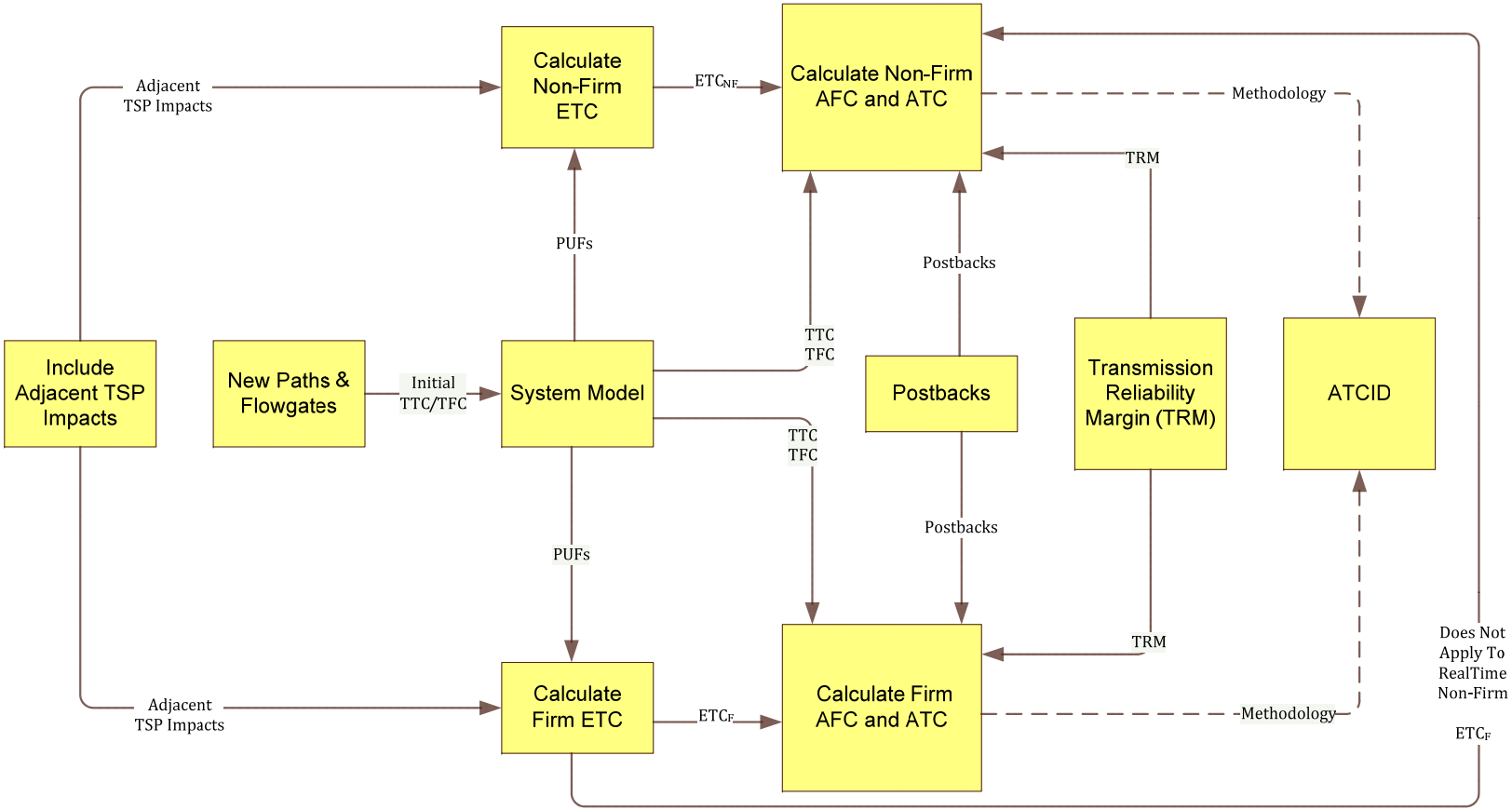

Available Transmission System Capability (ATC)

$$ATC_F = TTC - ETC_F - CBM - TRM + Postbacks_F + counterflows_F$$

Available Flowgate Capability (AFC)

$$AFC_F = TFC - ETC_{Fi} - CBM_i - TRM_i + Postbacks_{Fi} + counterflows_{Fi}$$

New Paths and Flowgates

- The following new Paths and Flowgates will be added to our OASIS for AFC and ATC calculations as required by the NERC ATC Standards. This list is preliminary and will not be finalized until January 1, 2011 at the earliest.
  - New Paths – MOD 29
    - Many of the sub-grid issues that have been identified through NOS will be addressed using MOD – 029 (Rated System Path Methodology).
  - New Flowgates - MOD 30
    - West of John Day E>W
    - West of Little Goose E>W
    - South of Allston S>N *
    - North of Hanford S>N *

**Flowgate is currently monitored for congestion management but is not yet posted to OASIS for AFC calculations.*

Updated PUFs & Hourly AFC

- Use of current Path Utilization Factors (PUF)s in short-term and hourly AFC calculations
  - Developing methodology to produce updated PUFs based on Transmission outage information
    - From: Using PUFs from an “all lines in service” case for all time horizons.
    - To: Using updated PUFs based on changing system conditions (primarily Transmission outages).
- Hourly Firm & Non-Firm AFC Methodology on Network
  - From: No hourly AFC methodologies (selling unlimited hourly firm and non-firm)
  - To: Having an hourly firm & non-firm AFC Methodology for BPA’s network and working towards increasing accuracy of hourly calculations.

Calculation of firm ETC

- Standards require use of load forecasts and generation dispatch for the time period being calculated when determining impact of NT Transmission Service.
- Standards also require modeling of PTP & Grandfathered commitments “expected to be scheduled.”
- Currently performing analysis and gathering requirements to meet these standards
  - From:
    - Using monthly peak NT load forecasts and generation patterns for calculating NT obligations for all time periods.
    - Two-year look ahead ATC Base Case done annually
    - PUF-Analysis run on interim reservations
  - To:
    - Use of NT load forecasts and generation dispatch for the time period being calculated.
    - Modeling PTP & Grandfathered obligations at “expected to be scheduled” levels.
    - Currently studying feasibility of three options:
      1. Using automated power flow models for hourly, daily, & monthly AFC calculations with PUF-Analysis run on interim reservations, OR
      2. Using historical scheduling patterns to determine “expected to be scheduled” ratio.
      3. Status Quo

Adjacent TSP impacts and TRM

- Standards require that each transaction of adjacent TSPs that has greater than or equal to 10% impact on any Flowgate to be included in Flowgate ETC calculations.
  - From: Impacts of adjacent TSPs only considered in annual ATC Base Case for long-term AFC calculations.
  - To: Working with adjacent TSPs to gather information on NT load forecasts and generation dispatch, PTP & Grandfathered obligations (reservations & schedules) to include impacts into hourly, daily, and monthly AFC calculations.
- Changes to Transmission Reliability Margin (TRM)
  - MOD-008-1 allows only certain “components of uncertainty” to be included in TRM.
    - From: TRM embedded in Total Transfer/Flowgate Capability calculations and use of an ATC Methodology Margin (AMM).
    - To: A more explicit TRM that is established using a TRM Methodology that complies with MOD-008-1.

ATC Implementation Documents

- Standards require an ATC Implementation Document (ATCID) that describes the implementation of the selected methodologies in such detail that given the same information, the results of the ATC and AFC calculations can be validated.
- Standards also require a CBMID, TRMID, and Postback Methodology (NAESB Standards).
- Implementation Documents will include at a minimum:
  - Criteria for adding Flowgates
  - Process for calculating TFC and TTC
  - Postback methodology
  - How counterflows are accounted for and the rationale for that accounting
  - How outages are included in transfer and flowgate capability calculations
  - How TRM is derived for each Path and Flowgate and what components of uncertainty are included.
  - Non-firm ATC and AFC Methodologies
  - Information on how source and sink is accounted for in AFC calculations.
  - How firm and non-firm ETCs are calculated for all time periods
- ATCID will be posted on OASIS per the NAESB Standards.

Next Steps

- Ongoing communication with Customers
  - Preferences?
    - Customer Forums
    - Email
    - Newsletters