BPA Attachment K Planning Process

Planning Meeting II

November 21, 2019

Agenda

- Introductions
- Attachment K Planning Cycle – 2019
- Attachment K Website
- Economic Study Requests
- Draft Plans of Service for Transmission
- Updates to Previous Projects
  - Significant Energized Projects
  - Significant Planned Projects
- Next Steps

Attachment K Planning Cycle - 2019

- **Customer Meeting I** **March 21, 2019**
  - **2018 Transmission Plan**
  - **Planning Assumptions, Criteria, Methodology**
  - **Economic Study**
- **Posting I** **August 2019**
  - **Summary of System Assessment Results and Conceptual Solutions**
- **Customer Meeting II** **November 21, 2019**
  - **Draft Plans of Service and Costs**
  - **Economic Study Requests**
- **Posting II** **December 2019**
  - Draft Transmission Plan for 2019
  - Final Transmission Plan for 2019

BPA's Attachment K Planning Process Website

https://www.bpa.gov/transmission/CustomerInvolvement/AttachmentK/Pages/default.aspx

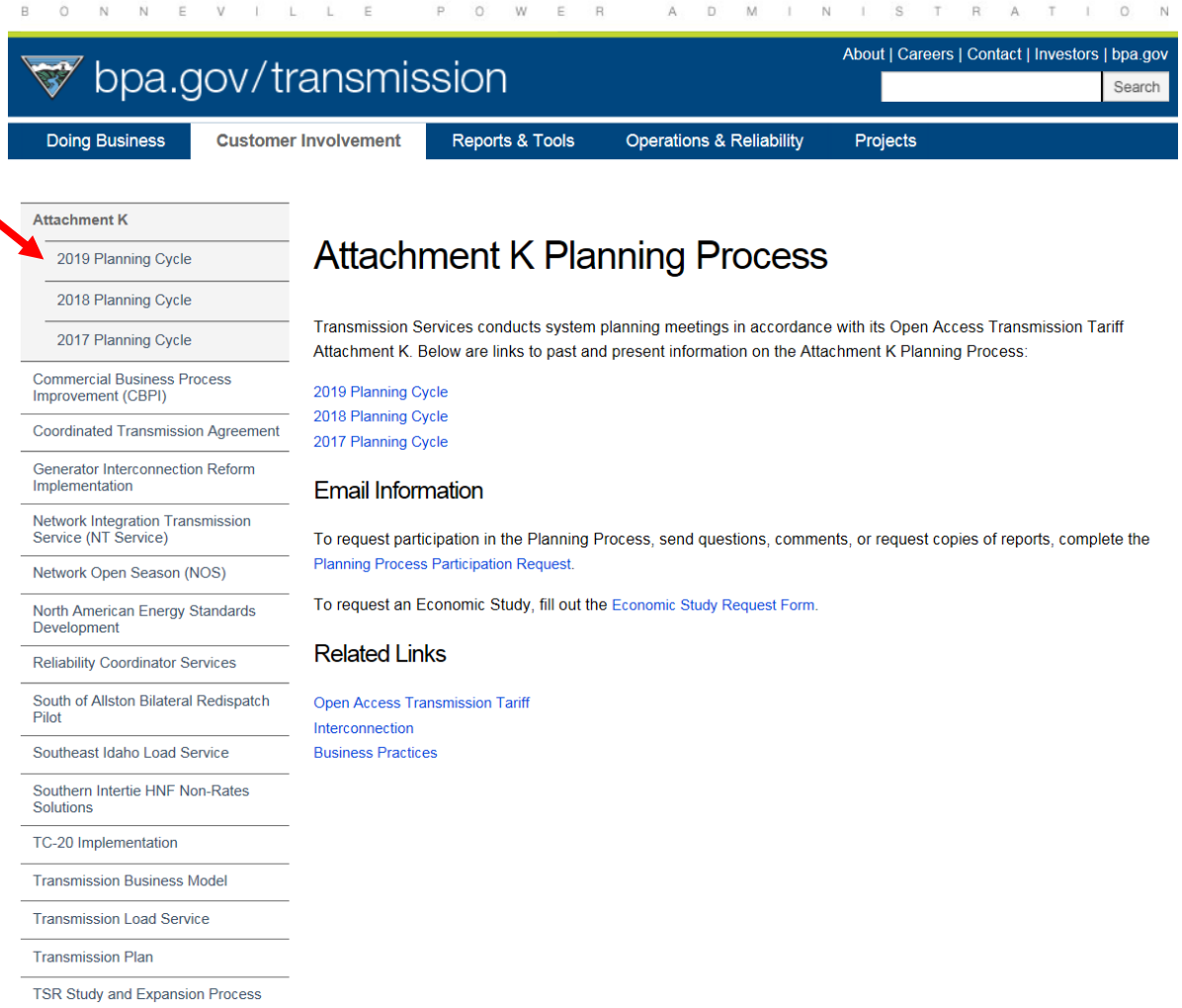

Navigating BPA's Attachment K Planning Process Website

https://www.bpa.gov/transmission/CustomerInvolvement/AttachmentK/Pages/2019-Planning-Cycle.aspx

B O N N E V I L L E P O W E R A D M I N I S T R A T I O N

bpa.gov/transmission

About | Careers | Contact | Investors | bpa.gov

Search

Doing Business | Customer Involvement | Reports & Tools | Operations & Reliability | Projects

- Attachment K
  - 2019 Planning Cycle
  - 2018 Planning Cycle
  - 2017 Planning Cycle
- Commercial Business Process Improvement (CBPI)
- Coordinated Transmission Agreement
- Generator Interconnection Reform Implementation
- Network Integration Transmission Service (NT Service)
- Network Open Season (NOS)
- North American Energy Standards Development
- Reliability Coordinator Services
- South of Allston Bilateral Redispatch Pilot
- Southeast Idaho Load Service
- Southern Intertie HNF Non-Rates Solutions
- TC-20 Implementation
- Transmission Business Model
- Transmission Load Service
- Transmission Plan
- TSR Study and Expansion Process

2019 Planning Cycle

Transmission Services conducts system planning meetings in accordance with its Open Access Transmission Tariff Attachment K. These meetings provide customers and interested parties the opportunity to discuss and provide input to the studies and development of the plans of service.

This page provides information about the Transmission Services Attachment K process including notifications of meetings, results of planning studies, plans of service and other reference information. To request participation in the Planning Process, complete and email the Participation Request form.

Meetings

November 21, 2019

Agenda

March 21, 2019

Agenda
Planning Meeting I 2019

Economic Studies

To request an Economic Study, fill out the Economic Study Request Form.

Reference Information

2019 System Assessment Summary (August 2019)
2019 System Assessment Assumptions and Methodology

Related Links

FERC Order 1000
FERC Order 890
NERC Reliability Standards
Open Access Transmission Tariff (includes Attachment K)
Planning Studies
WECC Reliability Criteria

BPA's Attachment K Planning Process Website

- **E-mail Information**
  - ***PlanningParticipationRequest@bpa.gov***
  - ***PlanningEconomicStudyRequest@bpa.gov***
- **Meetings**
  - Meeting announcements, agendas, etc.
- **Economic Studies**
  - Requesting and Tracking Economic Studies
- **Reference Information**
  - Materials associated with the Planning Process, participation forms, etc.
- **Related Links**
  - Links to information related to the Planning Process

Economic Study Requests

- What is an Economic Study?
  - Studies may be requested to address congestion issues or the integration of new resources and loads.
- How are Requests for Economic Studies submitted?

  PlanningEconomicStudyRequest@bpa.gov
- Requests may be submitted any time…

  Requests submitted after October 31 will be considered in the next prioritization process.
- BPA will complete up to two Economic Studies per year at its own expense.
- There were no Economic Study Requests received during the study cycle which closed on October 31, 2019.

Draft Plans of Service (2019 Planning Cycle)

- Most of the draft plans of service on the following slides, have been developed to maintain compliance with the applicable planning reliability standards and criteria
- The following standards and criteria were applied in development of the proposed corrective action plans:
  - **NERC Reliability Standard TPL-001-4**
    (North American Electric Reliability Corporation)
  - **WECC Reliability Criteria TPL-001-WECC-CRT-3**
    (Western Electricity Coordinating Council)
- The remaining plans of service provide needed equipment upgrades or improve Operational or Maintenance Flexibility

Draft Plans of Service (2019 Planning Cycle)

- BPA's 2018 and 2019 System Assessments were based on qualified past studies from 2017
- The 24 load service areas and 18 paths/interties were checked to ensure the previous studies are still valid
- There was a new plan of service identified from the 2019 System Assessment
- Several of the projects identified from previous Assessments have updated schedules
- These updates are shown on the following slides

  Bold text indicates a schedule or status change compared with last year's update.

Draft Plans of Service

from the 2019 System Assessment

Okanogan Area

Project	Schedule
Grand Coulee-Foster Creek 115 kV line upgrade Upgrade the Grand Coulee-Nilles Corner section of this line. This line section is approximately 18.4 miles long. Estimated cost will be provided after project scoping.	2021

Updates to Previous Projects

Seattle/Tacoma Area

Project	Schedule
Tacoma 230 kV Bus Tie and Auxiliary Bus Section Disconnect Switch (O&M Flexibility)	**2021**
Raver 500/230 kV Transformer Addition	2020
Tacoma 230 kV Series Bus Section Breaker Addition	**2021**
Monroe-Novelty 230 kV Line Upgrade	2020

Updates to Previous Projects

Portland Area

Project	Schedule
Keeler 500/230 kV Transformer Re-termination	**Completed**
Carlton 230 kV and 115 kV Breaker Additions (O&M Flexibility)	**2022**
Troutdale 230 kV Series Bus Section Breaker Addition	On hold

Salem/Albany Area

Project	Schedule
Santiam-Chemawa 230 kV Line Upgrade	**Completed**
Chemawa-Salem 115 kV Line Disconnect Switches	**Completed**

Updates to Previous Projects

Eugene Area

Project	Schedule
Alvey 115 kV Bus Section Breaker Addition (O&M Flexibility)	2021

Olympic Peninsula Area

Project	Schedule
Kitsap 115 kV Shunt Capacitor Relocation	**2022**

Updates to Previous Projects

Tri-Cities Area

Project	Schedule
Richland-Stevens Drive 115 kV Line	**Under development**
Jones Canyon 230 kV Shunt Reactor Addition	**2022**
McNary-Paterson Tap 115 kV Line	**2022**

Updates to Previous Projects

Longview Area

Project	Schedule
Longview 230/115 kV Transformer Bank Addition	2021

Mid-Columbia Area

Project	Schedule
Columbia-Rapids 230 kV Line Construction	2021
Columbia 230 kV Bus Tie and Bus Section Breaker Addition (O&M Flexibility)	**2021**

Updates to Previous Projects

Southwest Washington Coast

Project	Schedule
Holcomb-Naselle 115 kV Line Upgrade	2021

Centralia / Chehalis

Project	Schedule
Silver Creek 230 kV Bus Section Breaker Addition	**2022**

Updates to Previous Projects

Southeast Idaho/Northwest Wyoming Area

Project	Schedule
Spar Canyon 230 kV Reactor Addition (O&M Flexibility)	**2022**
Teton 115 kV Bus Tie Breaker Addition (O&M Flexibility)	**Completed**
Lost River (3) 230 kV Breaker Additions and Breaker-and-a-Half Reconfiguration (O&M Flexibility)	**Beyond 2023**
* Lower Valley Area Reinforcement Project (aka Hooper Springs)	2019

* *Constructed by Lower Valley Energy*

North Idaho Area

Project	Schedule
Libby FEC 115 kV Shunt Capacitor Addition	2023

Updates to Previous Projects

South Oregon Coast Area

Project	Schedule
Fairview 115 kV Shunt Reactor Addition	2022
Toledo 230 kV and 69 kV Bus Tie Additions (O&M Flexibility)	**2023**
Wendson 115 kV Bus Tie Breaker Addition (O&M Flexibility)	**2022**
Lane-Wendson 115 kV No. 1 Line Upgrade	**Completed**

De Moss/Fossil Area

Project	Schedule
De Moss 69 kV Shunt Capacitor Addition	**Completed**

Updates to Previous Projects

Puget Sound to Canada Path

Project	Schedule
Monroe 500 kV Line Re-terminations	**2020**

West of Cascades North (WOCN) Path

Project	Schedule
Schultz-Raver 500 kV No. 3 and No. 4 Series Capacitors	**Beyond 2029**

Significant Energized Projects

Slatt Series Capacitor Addition and Bakeoven Series Capacitor Upgrade

Description

This project involves adding a new series capacitor at Slatt Substation in the Slatt-Buckley 500 kV line and optimizing the existing series capacitors at Bakeoven in both John Day-Grizzly No.1 and No.2 500 kV lines. This project is needed to expand load service capability in Central Oregon.

Energization

The project was energized in June 2019.

Project Cost

The total project cost was $ 11.1 million.

Significant Energized Projects

Slatt Series Capacitor Addition and Bakeoven Series Capacitor Upgrade

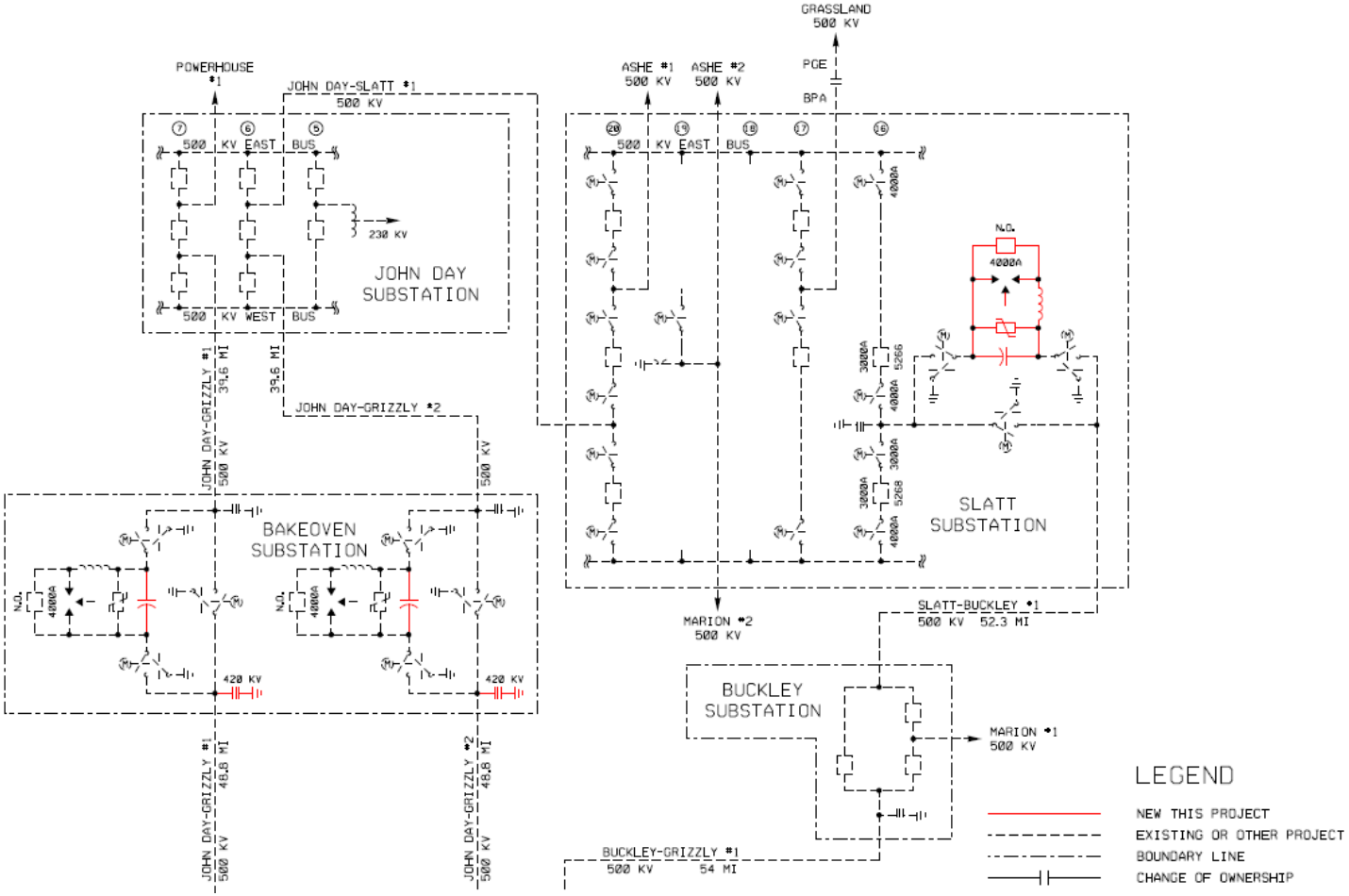

Significant Energized Projects

Quenett Creek

Description

This project is to accommodate requested interconnections of up to 300 MW of industrial load in The Dalles, Oregon. The plan of service includes a new 230 kV Substation (Quenett Creek) north of Chenoweth Substation and configured in a breaker and a half arrangement. The plan also upgrades the Big Eddy-Chenoweth 115 kV line No.1 to 230 kV operation, and adds a new 230/115 kV transformer at both Big Eddy and at Chenoweth Substations. Both Big Eddy-Chenoweth lines No.1 and No.2 are looped into the new Quenett Creek Substation.

Energization

The project was energized in 2018.

Project Cost

The project cost was $ 44.4 million.

Significant Energized Projects

Ouenett Creek

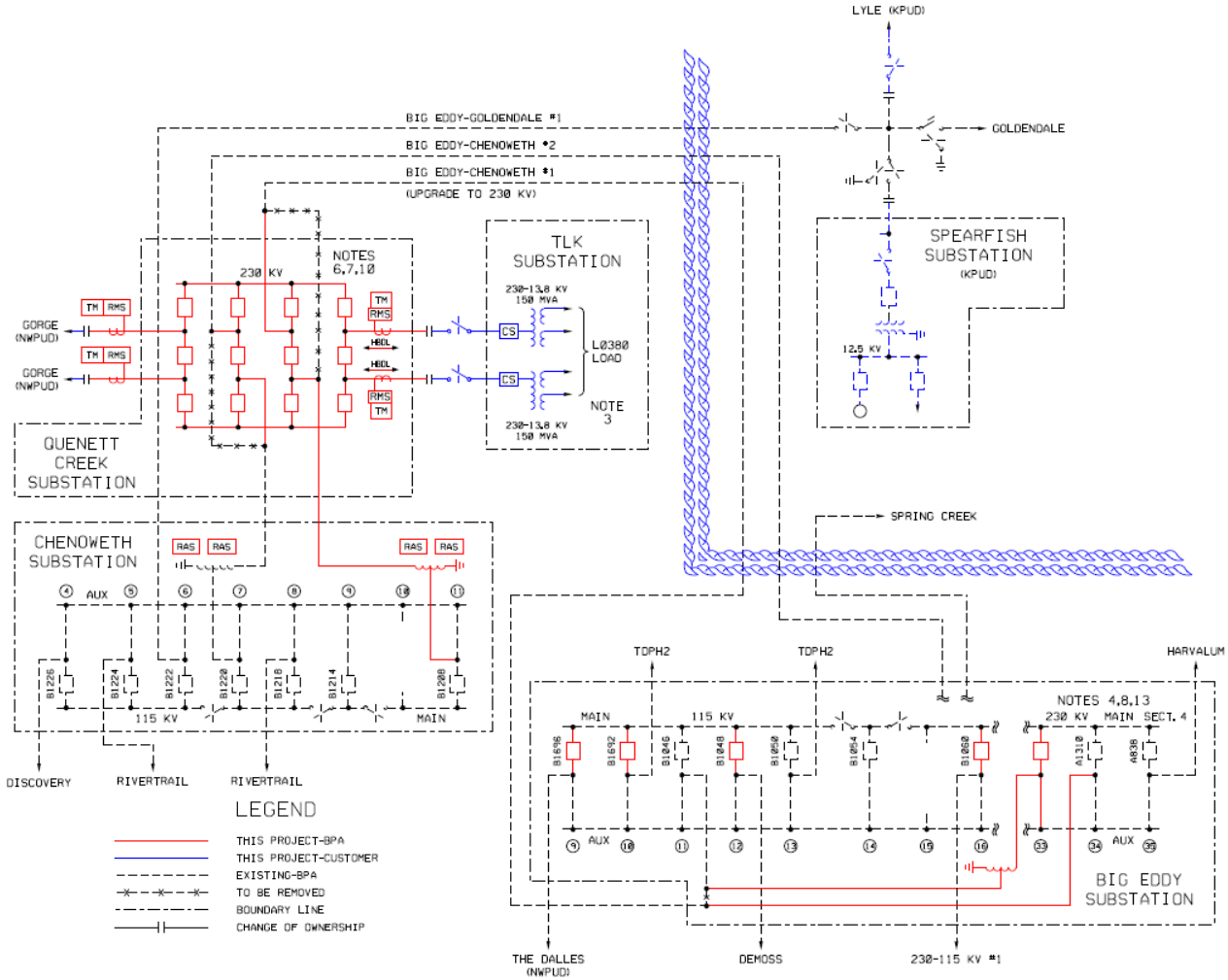

Significant Energized Projects

Morrow Flat Bank No.2

Description

This project is required to accommodate load interconnections in the Boardman, Oregon area (290 MW). This project expands the existing Morrow Flat Substation by adding a new 230 kV bay, 3 new 115 kV bays and a new 230/115 kV transformer bank.

Energization

The project was energized in October, 2019.

Project Cost

The project cost was $16.8 million.

Significant Energized Projects

Morrow Flat Bank No.2

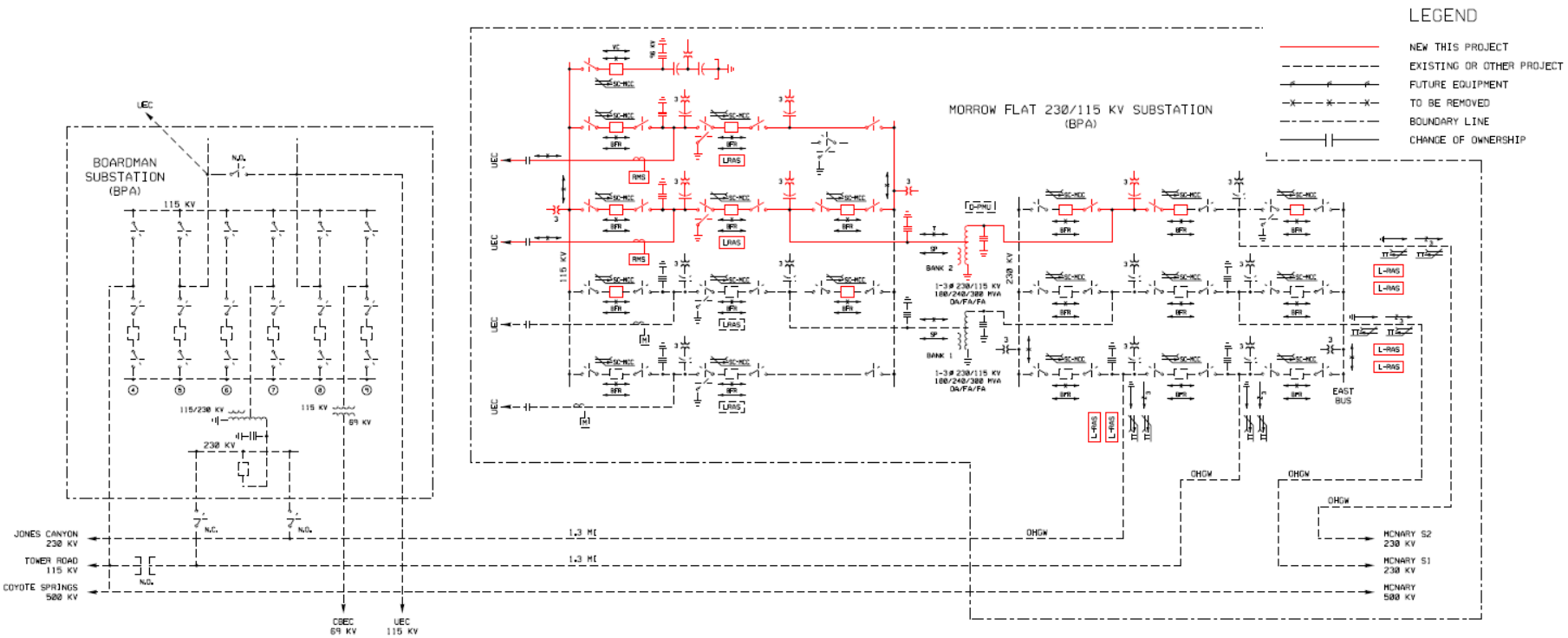

Significant Energized Projects

South Tacoma-St Clair 230 kV Line

Description

This project re-sagged the limiting spans of the South Tacoma-St.Clair 230 kV line from 80 deg C MOT to 100 deg C MOT. This increased the line's capacity by approximately 200 A.

Expected Energization

The project was energized in November 2019.

Project Cost

The project cost was $200,000.

Significant Energized Projects

Hooper Springs

Description

This project improves voltage stability for the Lower Valley and Fall River loads in the event of an outage of one of the sources to the area. The project included a new 138/115 kV transformer at Hooper Springs Substation and three new 115 kV breakers to create positions for the Hooper Springs-Tincup and Hooper Springs-Dry Creek lines.

Energization

Construction is complete and the project is expected to be energized in late November 2019.

Project Cost

The project was constructed by Lower Valley Energy.

Significant Energized Projects

Hooper Springs

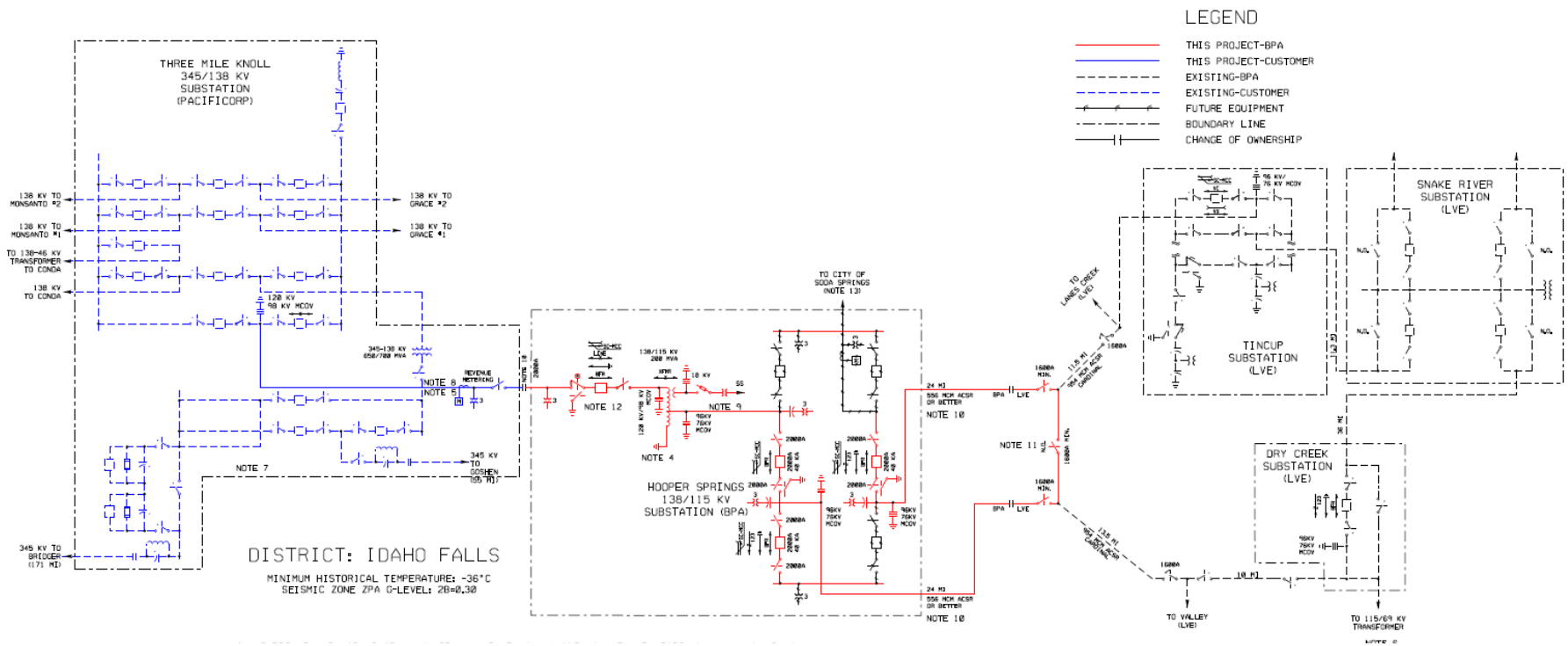

Significant Planned Projects

South Tri-Cities Reinforcement

Description

This project reinforces the South Tri-Cities Area to address near-term operations and maintenance issues as well as planning reliability issues in the Tri-Cities area, Washington. The area is compliant with planning standards for the loss of any single element. However, loss of two sources to the area may result in substantial loss of load. This hinders the ability to take any transmission facilities in the area out for maintenance since plans must be in place to address the potential loss of a second element.

Two alternative plans to reinforce the area are being scoped:

The Webber Canyon plan of service builds Webber Canyon substation and loops the Ashe-Marion No.2 500 kV line into a 500 kV ring bus configuration. A new Webber Canyon 500/115 kV transformer (four single phase units) connects 20 miles of 115 kV line (built to 230 kV) to Badger Canyon substation.

The East Roza plan of service builds a new East Roza substation and taps the Ashe-Slatt No.1 500 kV line creating a three-terminal 500 k line. A new East Roza 500/115 kV transformer then connects 6 miles of 115 kV line to Red Mountain substation.

Estimated Cost and Schedule

This project is presently in the scoping phase. The estimated project cost and schedule will be refined as the project progresses through scoping.

Significant Planned Projects

South Tri-Cities Reinforcement

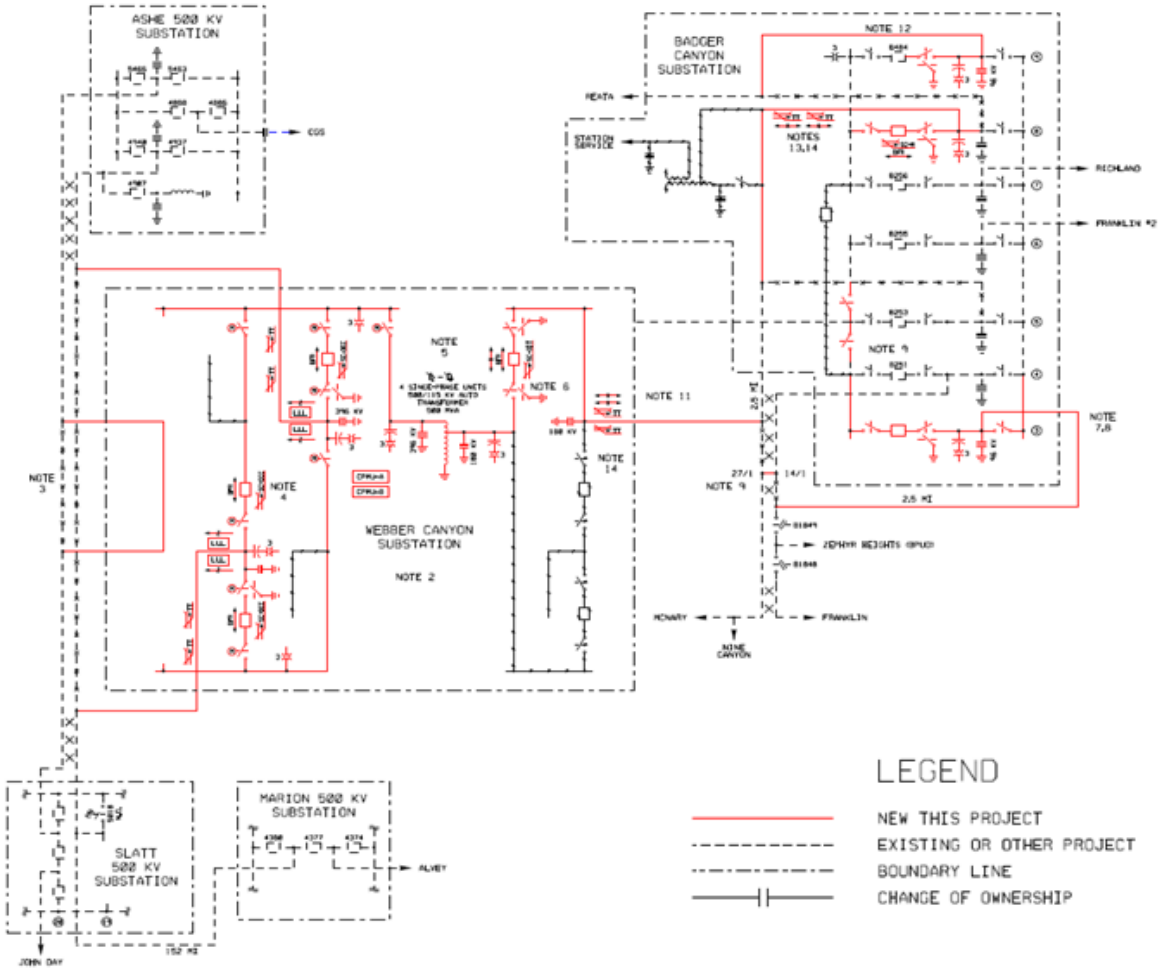

Significant Planned Projects

Schultz-Wautoma Series Capacitors

Description

This project is necessary to increase South of Allston (SOA) available transfer capability and improve operations and maintenance flexibility for SOA and I-5 corridor paths. The project will add a series capacitor on the Schultz-Wautoma 500 kV line at Wautoma Substation.

Estimated Cost and Schedule

This project is presently in the scoping phase. The estimated project cost and schedule will be refined as the project progresses through scoping.

Significant Planned Projects

Schultz-Wautoma Series Capacitors

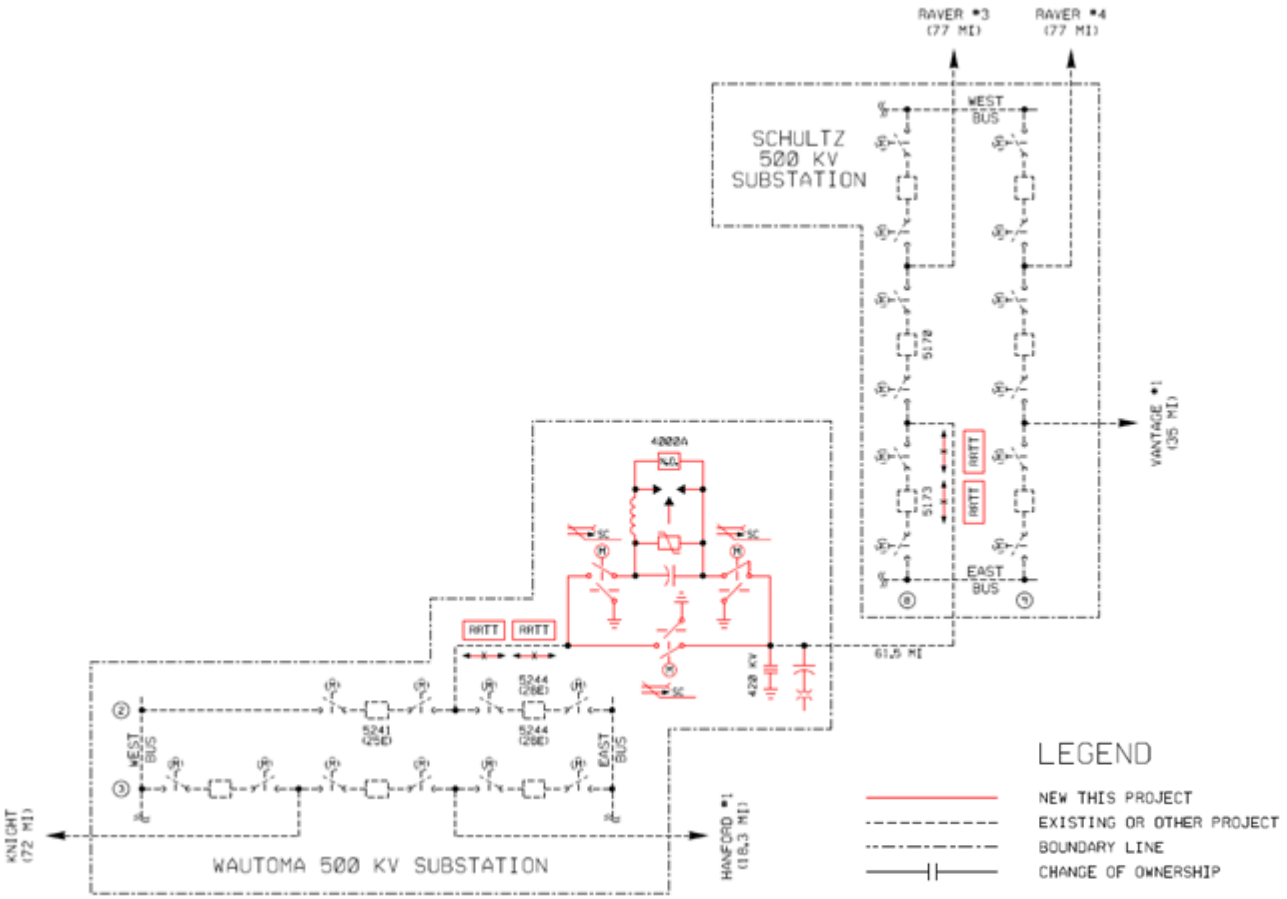

Significant Planned Projects

Monroe 500 kV Line Re-terminations

Description

This project increases reliability and operational flexibility in the Puget Sound area. This project adds a new 500 kV bay at Monroe Substation and re-terminates the following 500 kV lines at Monroe: the Chief Jo-Monroe line into bay 5 and the Custer-Monroe No.2 line into bay 4. This essentially reconfigures Monroe into a double-breaker, double-bus layout for improved reliability.

Expected Energization

2020

Estimated Cost

The estimated project cost is $7.3 million.

Significant Planned Projects

Monroe 500 kV Line Re-terminations

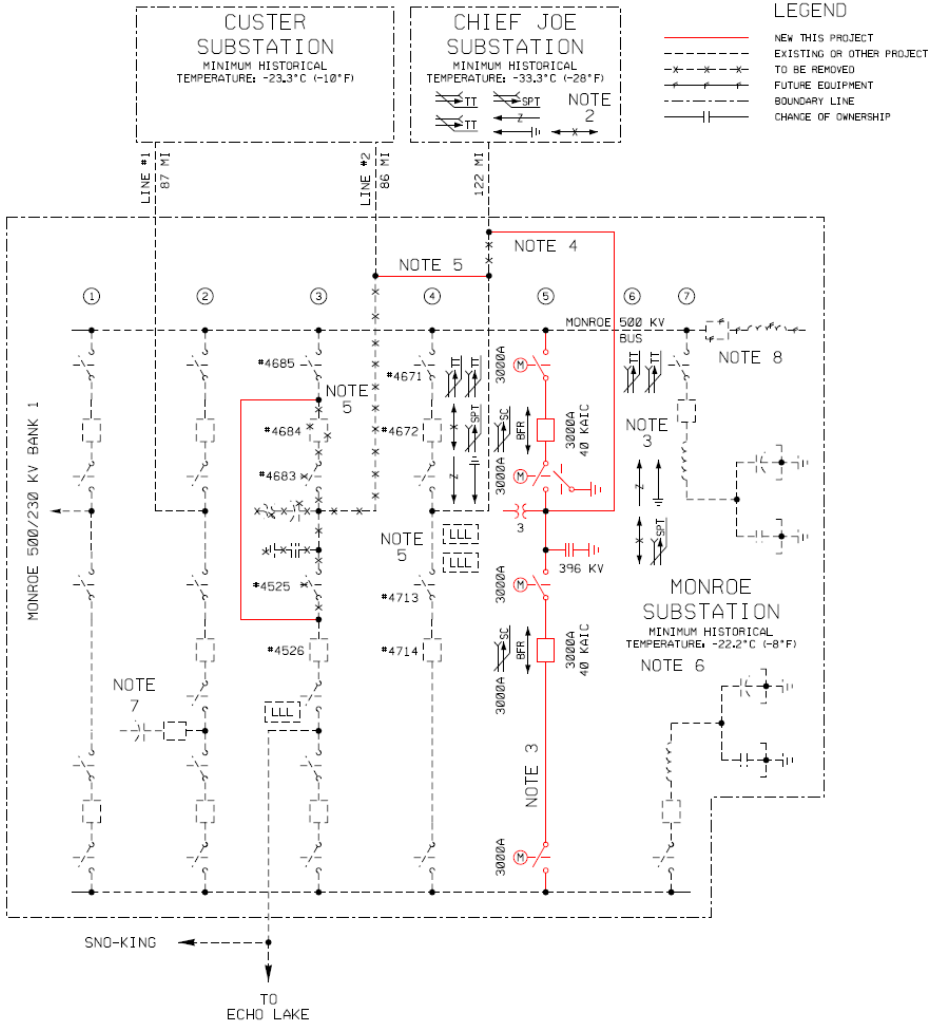

Significant Planned Projects

Buckley GIS Replacement

Description

This project is required to replace the Buckley 500 kV Gas Insulated Substation (GIS) with an Air Insulated Substation (AIS). The Buckley GIS has out lived its useful life and will run out of the necessary spare parts to continue its operation in the next 5 years. The long range plan for Buckley is to develop an AIS Substation with three 500 kV bays in arranged in a double breaker double bus configuration for the Buckley-Marion, Slatt-Buckley, and Buckley-Grizzly 500 kV lines.

Estimated Cost and Schedule

This project is under development and will be completed in the longer term planning horizon. The project is presently in the scoping phase. The estimated project cost and schedule will be refined as the project progresses through scoping.

Significant Planned Projects

Buckley GIS Replacement

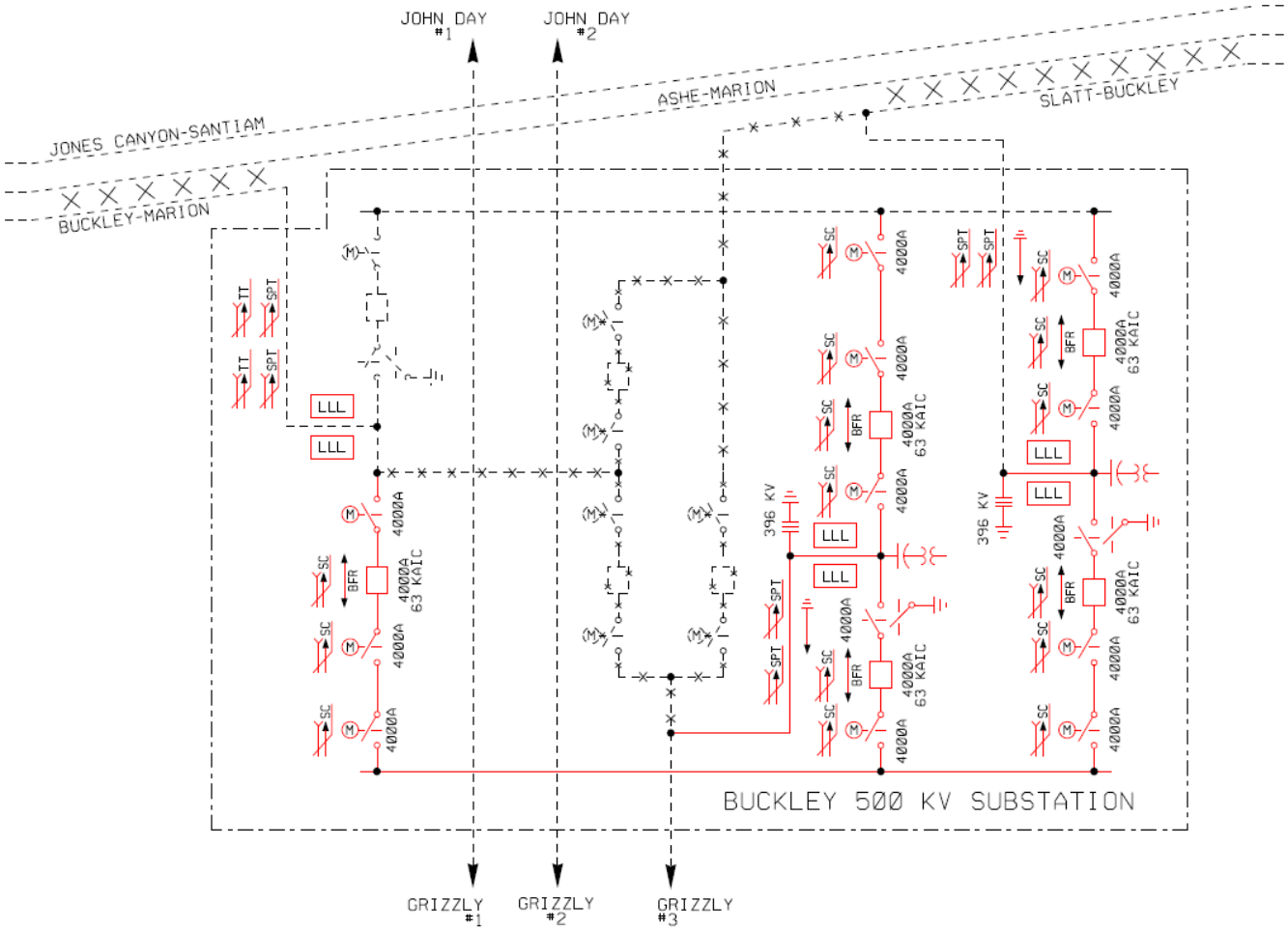

Next Steps

- **Update the BPA Transmission Plan** based on the 2019 planning cycle and post by the end of December, 2019.

- **Jan.1, 2020 – Begin 2020 Attachment K Planning Cycle**

Sign up to participate in future meetings or receive additional information by:

Filling out the Participation Request form on BPA's Planning Process website and sending it via e-mail to:

PlanningParticipationRequest@bpa.gov